EDITION / VERSİYON 11/2019

UPDATE / GÜNCELLEME 10/2024

58T

WINDOW & DOOR SYSTEM

PENCERE & KAPI SİSTEMİ

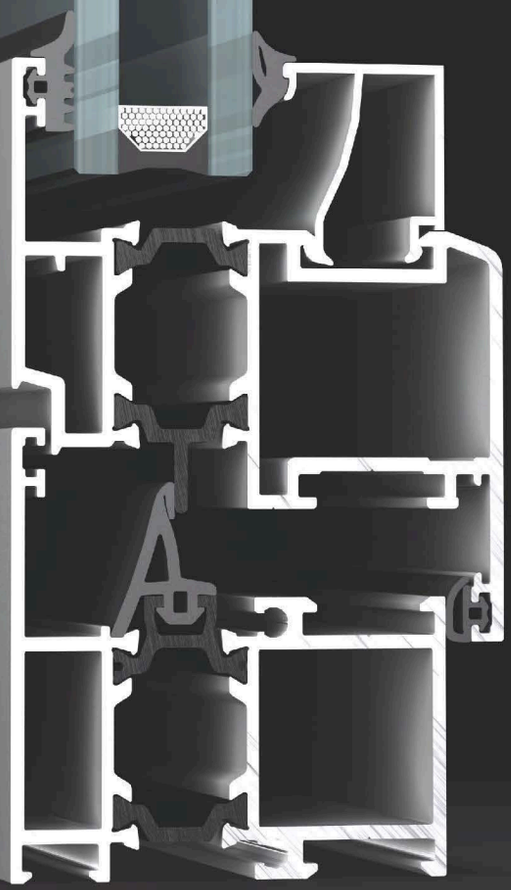

KURTOĞLU® ALUMINIUM

BRL® Aluminium System

LorenzoLine® aluminium profile system

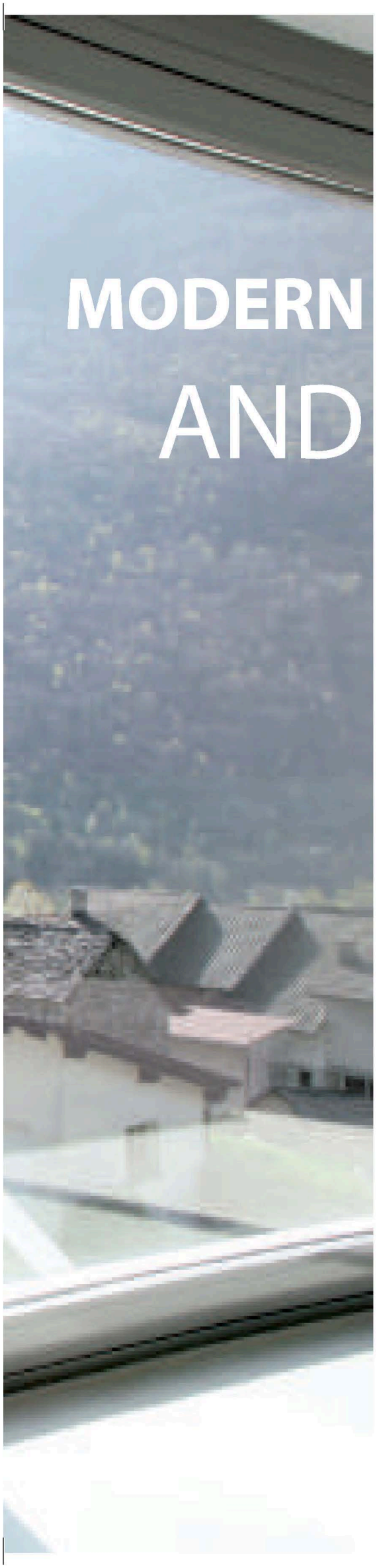

MODERN HARMONY OF SAFETY AND AESTHETICS

INDEX / İÇİNDEKİLER

Company Information / Hakkımızda	
Technical Information / Teknik Bilgiler	**1 - 11**
Profile Index / Profil İndeks	**13 - 18**
Profiles / Profiller	
Profiles (1.8 mm) / Profiller (1.8 mm)	**19-38**
Profiles (1.5 mm) / Profiller (1.5 mm)	**39 - 45**
Profiles (2 mm) / Profiller (2 mm)	**47 - 50**
Perimetric Profiles / Perimetrik Profiller	**51 - 53**
Hidden Sash Profiles / Gizli Kanat Profilleri	**55 - 61**
Details / Detaylar	**63 - 111**
Glazing Tables / Cam Tabloları	**113 - 116**
Accessories / Aksesuarlar	**117 - 128**
Cutting Size / Kesim Ölçüleri	**129 - 135**
Assembly Details / Montaj Detayları	**137 - 157**



www.kurtogluas.com

'KURTOĞLU ALÜMİNYUM SİSTEMLERİ,
MİMARİ PROJELERİNİZE ESTETİK ÇÖZÜMLER SUNAR.'

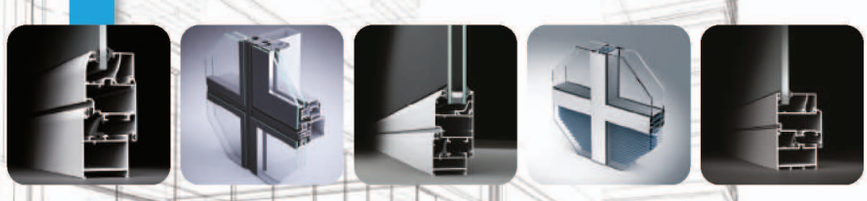

BRL Aluminium System

LorenzoLine aluminium profile system

Lorenzo bond Aluminium Composite Panel

aluteams Aluminium Profile Systems



COMPANY INFORMATION

FİRMAMIZ HAKKINDA

Our company started its operations with copper and lead casting in the 1960s, and in 1980, we started to serve in the Aluminium Sector with aluminium extrusion press that has 1200 ton capacity. KURTOGLU Aluminium is located in Corlu, approximately 100 km away from Istanbul and operates in 31.000 m2 indoor area. With our latest investments, our company has become a modern integrated facility.

- Annual production capacity ~ 34.000 tons,
- Approximately ~ 500 qualified employees,
- ISO 9001:2015 Quality System.
- Qualicoat Seaside Certificate,
- Qualanod Certificate,
- CE Certificate

The main production features of our Company are described as follows:

- Molding Room (Wire Erosion, Treatment Center),
- Aluminium Extrusion Presses, (800 tons, 1460 tons, 1880 tons, 1460/1880 tons, 2100 tons and 2600 tons),
- Anodic Oxidation Facility (75.000 amps - 412.500 m2 / month)
- Electrostatic Powder Paint Facility (750.000 m2 / month)
- Mechanical Processing Section (CNC Treatment Center)

Kurtoğlu Aluminyum exports its products to; U.S. America, New York, Los Angeles, San Francisco, Switzerland, Germany, Austria, Belgium, Sweden, Albania, England, Greece, Bulgaria, Cyprus, Serbia, Montenegro, Hungary, Georgia, Croatia, Turkmenistan, Kyrgyzstan, Azerbaijan, Moldova, Ukraine, Macedonia, Kosovo, Romania, Belarus, Czech Republic, Libya, Iraq, Algeria, Tunisia, Qatar, Nigeria, Israel, Ghana, Gabon, France, India, Saudi Arabia, Burkina Faso, Ethiopia, Egypt, Ivory Coast, Morocco, Poland, The Netherlands, Russia, Madagascar, Niger, Tanzania, Mozambique, Norway, Lebanon, Mayotte, Palestine, Senegal, Somali, Benin, Canada, Panama.

KURTOĞLU ALUMINIUM continues to operate based on the principle of providing services to its customers with zero fault.

Şirketimiz 1960' lı yıllarda Bakır ve Kurşun ile üretim hayatına başlamıştır. 1980 yılında 1200 tonluk Alüminyum Ekstrüzyon presi ile üretim sektörüne girmiştir.
KURTOĞLU Alüminyum; İstanbul'a yaklaşık 100 km mesafede Çorlu'da bulunmaktadır. 31.000 m^2 kapalı alanda faaliyetini sürdürmektedir. Son yapılan yatırımlarla şirketimiz modern bir entegre tesis haline ulaşmıştır.

- Yıllık kapasite ~ 34.000 ton,
- Yaklaşık ~ 500 kalifiye eleman,
- ISO 9001:2015 kalite sistemi,
- Qualicoat Seaside Belgesi,
- Qualanod Belgesi,
- CE Belgesi,

Şirketimizin ana özellikleri aşağıda da belirtilmiştir:

- Kalıphane Bölümü (Tel erozyon, İşleme Merkezi)
- Alüminyum Ekstrüzyon Presleri; (800 ton, 1460 ton, 1880 ton, 1460/1880 ton, 2100 ton ve 2600 ton),
- Eloksal Tesisi (75.000 Amper - 412.500 m^2 / Ay)
- Elektrostatik Toz Boya Tesisi (750.000 m^2 / Ay)
- Mekanik İşlem Bölümü (CNC İşleme Merkezi)

KURTOĞLU Alüminyum Ürünleri; Amerika, New York, Los Angeles, San Francisco, İsviçre, Almanya, Avusturya, Belçika, İsveç, Arnavutluk, İngiltere , Yunanistan, Bulgaristan, Kıbrıs, Sırbistan, Karadağ, Macaristan, Gürcistan, Hırvatistan, Türkmenistan, Kırgızistan, Azerbaycan, Moldovya, Ukrayna, Makedonya, Kosova, Romanya, Beyaz Rusya, Çek Cumhuriyeti, Libya, Irak, Cezayir, Tunus, Katar, Nijerya, İsrail, Gana, Gabon, Fransa, Hindistan, Suudi Arabistan, Burkina Faso, Etiyopya, Mısır, Fil Dişi Sahili, Fas, Polonya, Hollanda, Rusya Federasyonu, Madagaskar, Nijer, Tanzanya, Mozambik, Norveç, Lübnan, Mayotte, Filistin, Senegal, Somali, Benin, Kanada, Panama' ya ihraç edilmektedir.

KURTOĞLU ALÜMİNYUM müşterilerine sıfır hata ile hizmet vermeyi temel alarak çalışmalarını sürdürmektedir.

‘The countries of export;
İhracat yapılan ülkeler’

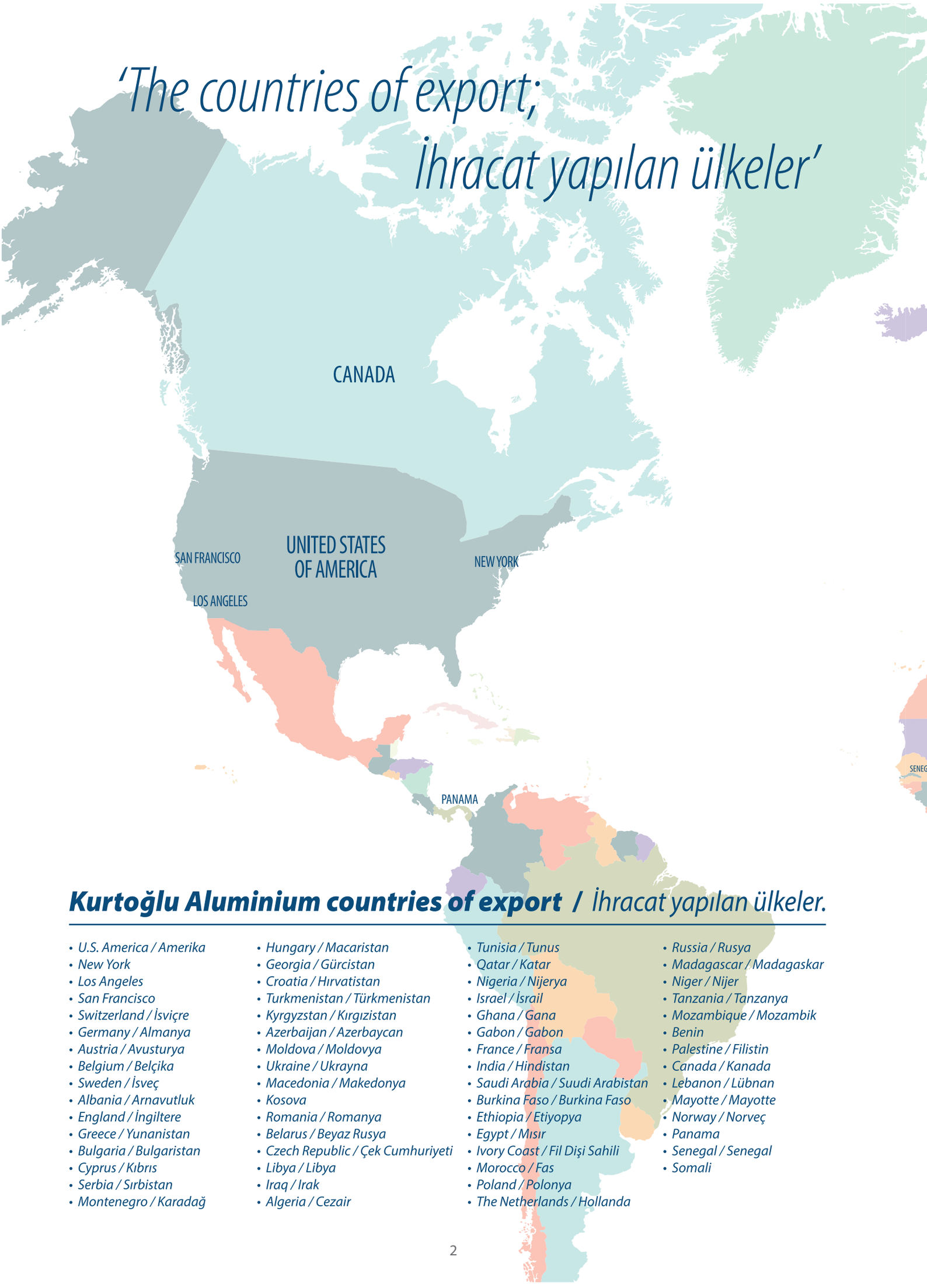

Kurtoğlu Aluminium countries of export / *İhracat yapılan ülkeler.*

- *U.S. America / Amerika*
- *New York*
- *Los Angeles*
- *San Francisco*
- *Switzerland / İsviçre*
- *Germany / Almanya*
- *Austria / Avusturya*
- *Belgium / Belçika*
- *Sweden / İsveç*
- *Albania / Arnavutluk*
- *England / İngiltere*
- *Greece / Yunanistan*
- *Bulgaria / Bulgaristan*
- *Cyprus / Kıbrıs*
- *Serbia / Sırbistan*
- *Montenegro / Karadağ*
- *Hungary / Macaristan*
- *Georgia / Gürcistan*
- *Croatia / Hırvatistan*
- *Turkmenistan / Türkmenistan*
- *Kyrgyzstan / Kırgızistan*
- *Azerbaijan / Azerbaycan*
- *Moldova / Moldovya*
- *Ukraine / Ukrayna*
- *Macedonia / Makedonya*
- *Kosova*
- *Romania / Romanya*
- *Belarus / Beyaz Rusya*
- *Czech Republic / Çek Cumhuriyeti*
- *Libya / Libya*
- *Iraq / Irak*
- *Algeria / Cezair*
- *Tunisia / Tunus*
- *Qatar / Katar*
- *Nigeria / Nijerya*
- *Israel / İsrail*
- *Ghana / Gana*
- *Gabon / Gabon*
- *France / Fransa*
- *India / Hindistan*
- *Saudi Arabia / Suudi Arabistan*
- *Burkina Faso / Burkina Faso*
- *Ethiopia / Etiyopya*
- *Egypt / Mısır*
- *Ivory Coast / Fil Dişi Sahili*
- *Morocco / Fas*
- *Poland / Polonya*
- *The Netherlands / Hollanda*
- *Russia / Rusya*
- *Madagascar / Madagaskar*
- *Niger / Nijer*
- *Tanzania / Tanzanya*
- *Mozambique / Mozambik*
- *Benin*
- *Palestine / Filistin*
- *Canada / Kanada*
- *Lebanon / Lübnan*
- *Mayotte / Mayotte*
- *Norway / Norveç*
- *Panama*
- *Senegal / Senegal*
- *Somali*



BRL Aluminium System

LorenzoLine aluminium profile system

Lorenzo bond Aluminium Composite Panel

aluteams Aluminium Profile & Accessory Systems



QUALITY POLICY

KALİTE POLİTİKASI

The company's quality policy is based upon the pillars of product quality, state of the art technology, customer satisfaction,training, environmental awareness, and continuous development. Kurtoğlu always implements this policy in all of its operations and units.

Şirketin kalite politikası ürün kalitesine,yeni teknolojilere,müşteri memnuniyetine,eğitime,çevre duyarlılığına ve sürekli gelişime dayanır. Kurtoğlu,her zaman tüm faaliyet ve birimlerinde bu politikayı uygular.

ORGADATA SOFTWARE & SOLUTION PARTNER

The conversational software Ksoft® matches perfectly with the requirements of all aluminum windows, door and curtain wall systems configuration, functionality and menu navigation. Ksoft® is a complete service package for architectural profile applications, and features all you need in the metal-processing operations with tremendous speed and perfection.

www.orgadata.com
ORGADATA
A CLICK AHEAD

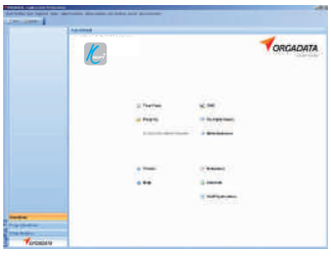


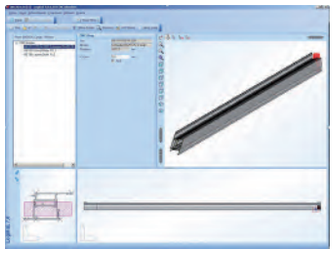
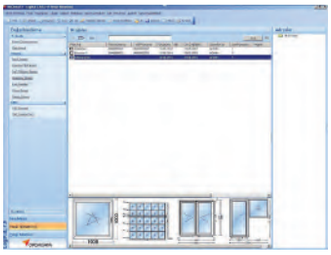
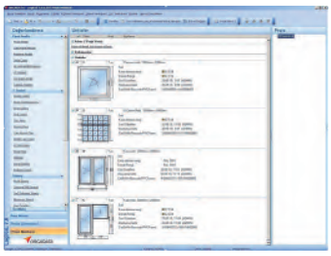
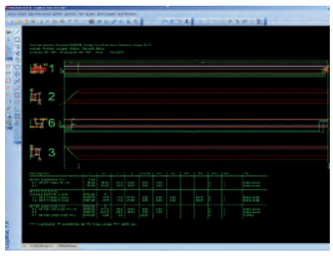

ORGADATA YAZILIM VE ÇÖZÜM ORTAĞI

İletişimli Ksoft® yazılımı tüm alüminyum pencereler , kapı ve cephe sistemleri konfügrasyon, fonksiyonel ve menü navigasyonu ile ilgili ihtiyaçları karşılar. Ksoft® yazılım programı mimari profil uygulaması ve metal işinde gerekli özellikleri optimum hız ve olağanüstü sunan tam bir program paketidir.

58T

TECHNICAL INFORMATION / TEKNİK BİLGİLER

OPENING OPPORTUNITIES / AÇILIM SEÇENEKLERİ

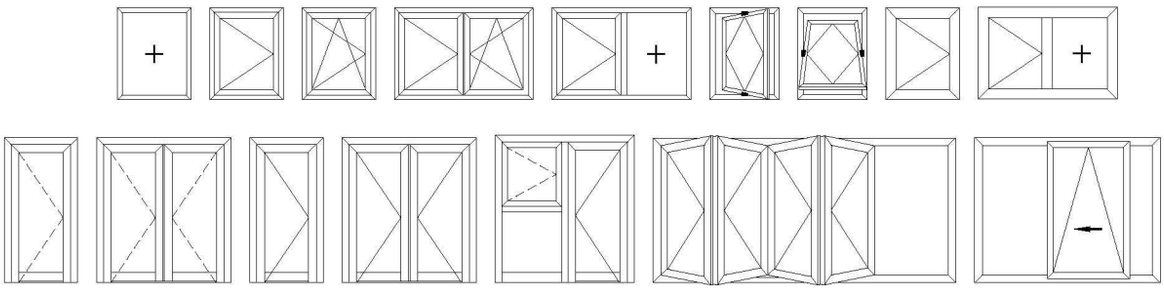

- Fixed / Sabit
- Top Hung / Vasitas
- Side Hung Window / Tek Açılım
- Tilt & Turn Window / Çift Açılım
- Double Sash / Çift Kanat Açılım
- Angular / Açılı Dönüş
- Inside Opening Door / İçe Açılır Kapı
- Inside Opening Double Sash Door / İçe Açılır Çift Kanat Kapı
- Outside Opening Door / Dışa Açılır Kapı
- Outside Opening Double Sash Door / Dışa Açılır Çift Kanat Kapı
- Pivot Opening / Pivot Açılım
- Tilt & Slide Opening Door / Paralel Sürme
- Folding Door / Katlanır Kapı

58T WINDOW & DOOR SYSTEM

- Various opening options in doors and windows ,
- Use of PVC accessories,
- Safe air and water drainage system,
- Decorative door threshold solutions,
- Providing visual integrity with the systems 58C non thermal,
- 58T,64T and 74T Thermals and these systems are prefered in the projects due to structural chamfered sash.
- Economic pivot solution by structing frame and sash with mullion.
- Joint options for mullions with extruded joints and screw mothods.
- Constructing doors and windows suitable for 50F facade system.
- Different shapes and with different static values, aesthetic and stable solutions with mullion profiles,
- Hidden sash solution,

58T KAPI & PENCERE SİSTEMİ

- Kapı ve pencerelerde farklı açılım seçenekleri,
- Pvc aksesuar kullanılabilme imkanı,
- Güvenli hava ve su tahliyesi,
- Hemyüz dekoratif kapı eşik çözümleri,
- Pahlı kanat yapısından dolayı tercih edildiği projelerde 58C yalıtımsız sistem,
- 58T, 64T ve 74T yalıtımlı sistemler ile görsel bütünlük sağlaması,
- Orta kayıt profili ile kasa ve kanat oluşturabileceğimiz ekonomik pivot çözümü,
- Orta kayıt profillerini çektirme bağlantı ve vida yoluyla bağlantı seçenekleri,
- 50F Cephe sistemine uygun kapı ve pencere yapma imkanı,
- Farklı statik değerlere sahip ve farklı formlara sahip orta kayıt profilleri ile estetik ve stabil çözümler,
- Gizli kanat çözümü,

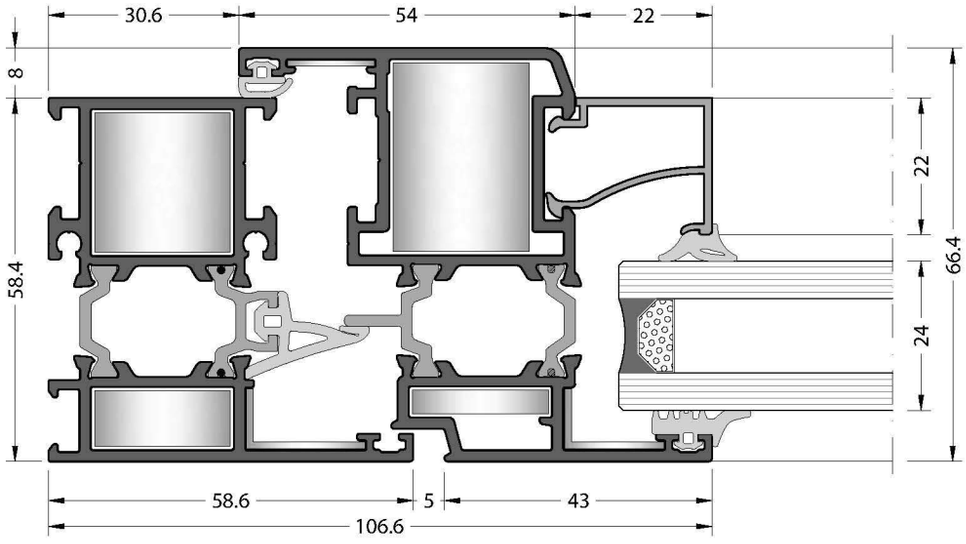

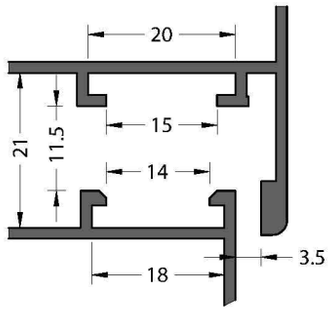

Euro Grove Section 1
Avrupa Kanal 1

system**properties** / sistem**bilgisi**

Construction Depth	*Window : Frame : 58 mm - Vent : 66 mm *Door : Frame : 58 mm - Vent : 66 mm
Glazing	Glazing from 4 mm up to 37 mm with dry EPDM gaskets. The choice of joits and glazing beads depend on the thickness of the glass.According to the tolerances of the glazing either a smaller or bigger joint and or glazing bead is used.
Insulation Bar Thermal Permability	18 mm (Uf) 2,96 W / m2K
Opening Opportunities	• Fixed • Top Hung • Side Hung Window • Tilt & Turn Window • Double Sash • Angular • Inside Opening Door • Inside Opening Double Sash Door • Outside Opening Door • Outside Opening Double Sash Door • Pivot Opening • Tilt & Slide Opening Door • Folding Door • Hidden Sash
Connections	Press corner joints can apply for fixing corners. The transoms are fixed with screw and junction.
Gaskets	The opening windows have a central gasket an acoustical gasket and glazing gaskets in EPDM The central gasket ensures the window is wind and waterlight over the complete surface. The acoustic gasket is uninterrupted.
Drainage	All window types must be equipped with a drainage system.

Derinlik	*Pencere : Kasa : 58 mm - Kanat : 66 mm *Kapı : Kasa : 58 mm - Kanat : 66 mm
Cam Kalınlığı	Cam kalınlığı EPDM fitil ile birlikte 4 mm - 37 mm aralığındadır.Bağlantı ve çıta cam kalınlığına göre seçilmelidir. Cam toleransına göre küçük yada büyük bağlantı veya cam çıtası kullanılır.
Isı Bariyeri Isı Geçirgenliği	18 mm (Uf) 2,96 W / m2K
Açılım Seçenekleri	• Sabit • Vasitas • Tek Açılım • Çift Açılım • Çift Kanat Açılım • Açılı Dönüş • İçe Açılır Kapı • İçe Açılır Çift Kanat Kapı • Dışa Açılır Kapı • Dışa Açılır Çift Kanat Kapı • Pivot Açılım • Paralel Sürme • Katlanır Kapı • Gizli Kanat
Bağlantılar	Köşeyi birleştirmek için pres köşe bağlantıları uygulanabilir. Orta kayıtlar vida kullanılarak yada çektirme bağlantılar ile montaj yapılabilir.
Fitil	Açılır pencerede EPDM olan akustik orta fitil ve cam fitili kullanılır. Orta fitil tüm yüzey üzerinde hava ve su geçirmezliği, akustik fitil ise süreklilik sağlar.
Su Tahliye	Tüm pencere sistemleri su tahliye donanımına sahip olmalıdır.

production**properties** / üretim**bilgisi**

Alloy

The aluminium profiles have been extruded from the alloy EN-AW 6063 according to the EN-AW 6060.

Physical Properties

1. Density	: 2.70 Kg / dm3
2. Modules of Elasticity	: 69 kN / mm2
3. Resistivity	: 20° 33 n Ω .m
4. Melting point	: 600 - 655 °C
5. Linear expeansion coefficient	: 20 - 100°C µ °C^{-1}

Mechanical Properties

1. Tensile strength	: Min 215 MPa
2. Yield strength	: 190 MPa
3. Elongation	: % 10
4. Hardness	: 67 Brinell

Surface Treatment

Anodising

In anodising process , microns of the profiles for the inside and outside use are different. The complete anodisation process takes place in accordance with the specifications of **QUALANOD.**

Electrostatic Powder Coating

The thermal break allows the profile to be painted when compounded. On average, the coating thickness is minimally 60 micron. The complete powder coating process takes place in accordance with the specifications of **QUALICOAT .**

Alaşım

Alüminyum profiller EN-AW 6063 alaşımından ve EN-AW 6060 standardına göre üretilir.

Fiziksel Özellikler

1. Yoğunluk	: 2.70 Kg / dm3
2. Elastisite Modülü	: 69 kN / mm2
3. Direnç	: 20° 33 n Ω .m
4. Erime Noktası	: 600 - 655 °C
5. Genişleme Katsayısı	: 20 - 100°C µ °C^{-1}

Mekanik Özellikler

1. Kopma Dayanıklılığı	: Min 215 MPa
2. Elastisite Limiti	: 190 MPa
3. Uzama	: % 10
4. Sertlik	: 67 Brinell

Yüzey İşlem

Eloksal

Eloksal projesinde profil mikronları iç ve dış kullanım için farklıdır.Bütün eloksal projesi **QUALANOD** spesifikasyonlarına göre uygulanır.

Eloktrostatik Toz Boya

Isı bariyeri çakıldığında profil boyanabilir. Genel olarak kaplama kalınlığı minimum 60 mikrondur. Bütün toz boya projesi **QUALICOAT** spesifikasyonlarına göre uygulanır.

Evidence of Performance

Air permeability, Watertightness, Resistance to wind load

Test Report
No. 12-001312-PR01
(PB-A01-02-en-01)

Client

KURTOGLU ALUMINYUM
BAKIR KURSUN SAN. A.S.
Haciseremet Mevkii TEM
Corlu Cikisi Velimese
59860 Tekirdag
Turkey

Product

Tilt and turn window with fixed sublight

Designation: System designation: 58T

Performance-relevant product details: Material: Aluminium profiles with thermal break

Overall dimensions (W x H): 792 mm x 2,000 mm

Special features:

Results

Air permeability according to EN 12207:1999-11

Class 4

Watertightness according to EN 12208:1999-11

Class E1500

Resistance to wind load
according to EN 12210:1999-11/AC:2002-08

Class C4 / B4

ift Rosenheim
26.09.2012

Robert Kolacny, Dipl.-Ing. (FH)
Deputy Head of Testing Department
Building Components

Rolf Schnitzler, Dipl.-Ing. (FH)
Operating Product Officer
Building Components

Basis

EN 14351-1:2006+A1:2010

Test standard/s:
EN 1026:2000-06
EN 1027:2000-06
EN 12046-1:2003-11
EN 12211:2000-06
EN 14609:2004-06
Correspond/s to the national standard/s (e.g. DIN EN)

Representation



Instructions for use

The results obtained can be used by the manufacturer as the basis for the manufacturer ITT test report summary. Observe the specifications set out by the applicable product standard.

Validity

The data and results refer solely to the tested and described specimen. Classification remains valid as long as the product and the above basis remain unchanged. The results can be extrapolated under the manufacturer's own liability subject to observance of the relevant specifications set out by the applicable product standard. This test/evaluation does not allow any statement to be made on any further characteristics regarding performance and quality of the construction presented; in particular the effects of weathering and ageing were not taken into account.

Notes on publication

The **ift**-Guidance Sheet "Advertising with ift test documents" applies. The cover sheet can be used as an abstract.

The report contains a total of 17 pages.

ift Rosenheim GmbH
Geschäftsführer:
Dipl.-Ing. (FH) Ulrich Sieberath
Dr. Jochen Peichl

Theodor-Gietl-Str. 7 - 9
D-83026 Rosenheim
Tel.: +49 (0)8031/261-0
Fax: +49 (0)8031/261-290
www.ift-rosenheim.de

Sitz: 83026 Rosenheim
AG Traunstein, HRB 14763
Sparkasse Rosenheim
Kto. 3822
BLZ 711 500 00

Notified Body Nr.: 0757
Anerkannte PÜZ-Stelle: BAY 18

THERMAL ISOLATION / ISI GEÇİRGENLİK

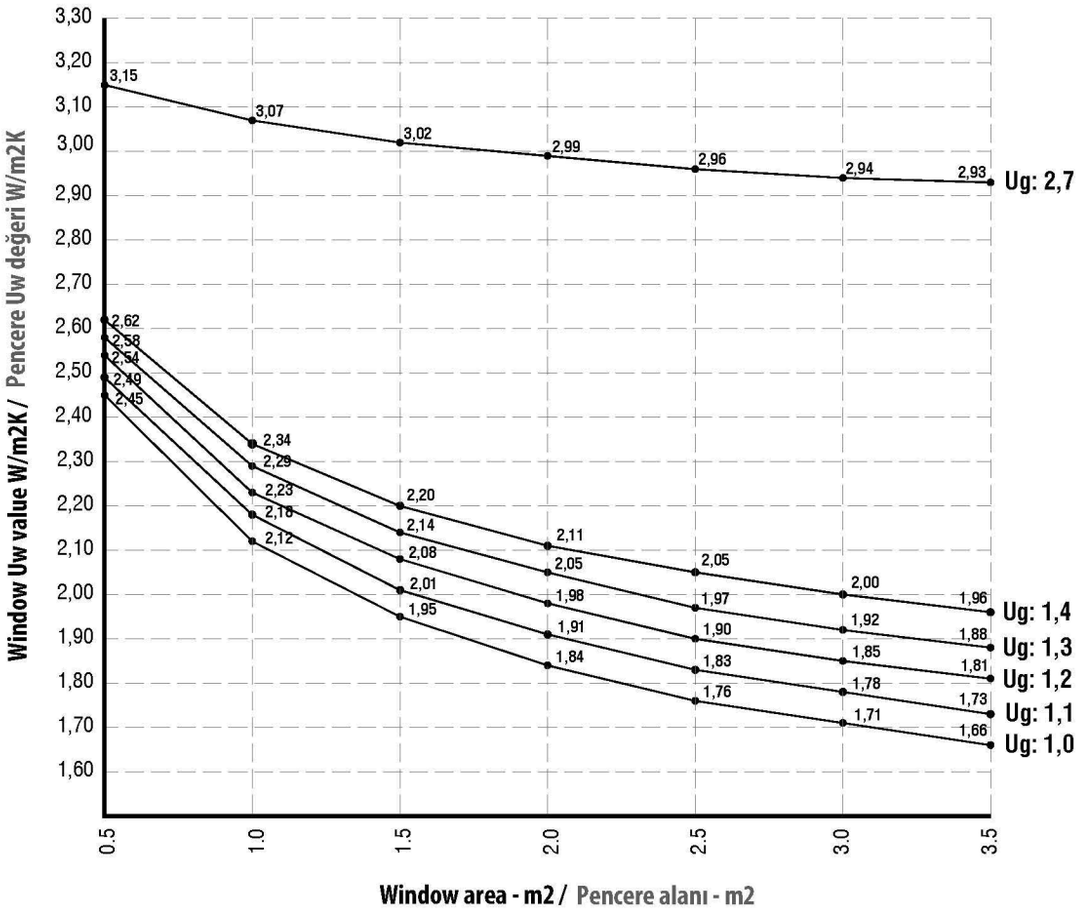

The graphic shows the Uw value of the window system 58T.
The values are applied for six different glasses (Ug 1.0 - 2,7 W/m2K) and areas (m2).
Bu grafik, 58T sistemine ait pencere Uw değerlerini göstermektedir.
Değerler 6 farklı cam (Ug 1.0 - 2.7 W/m2K) ve alanlar (m2) için uygulanmıştır.

THERMAL PERFORMANCE / ISI PERFORMANSI

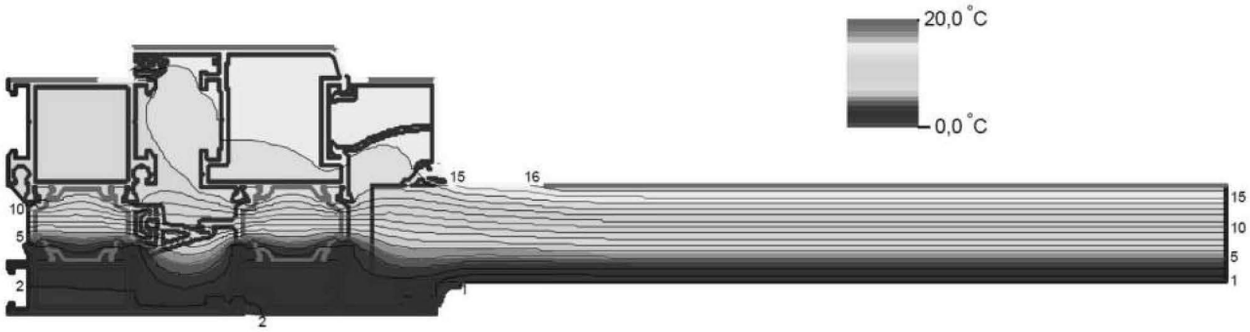

System section Uf value / Sistem kesit Uf değeri **Uf : 2,96 W/m2K**

Wall Thickness
Et Kalınlık
1.8 mm

STATIC VALUES / STATİK DEĞERLER

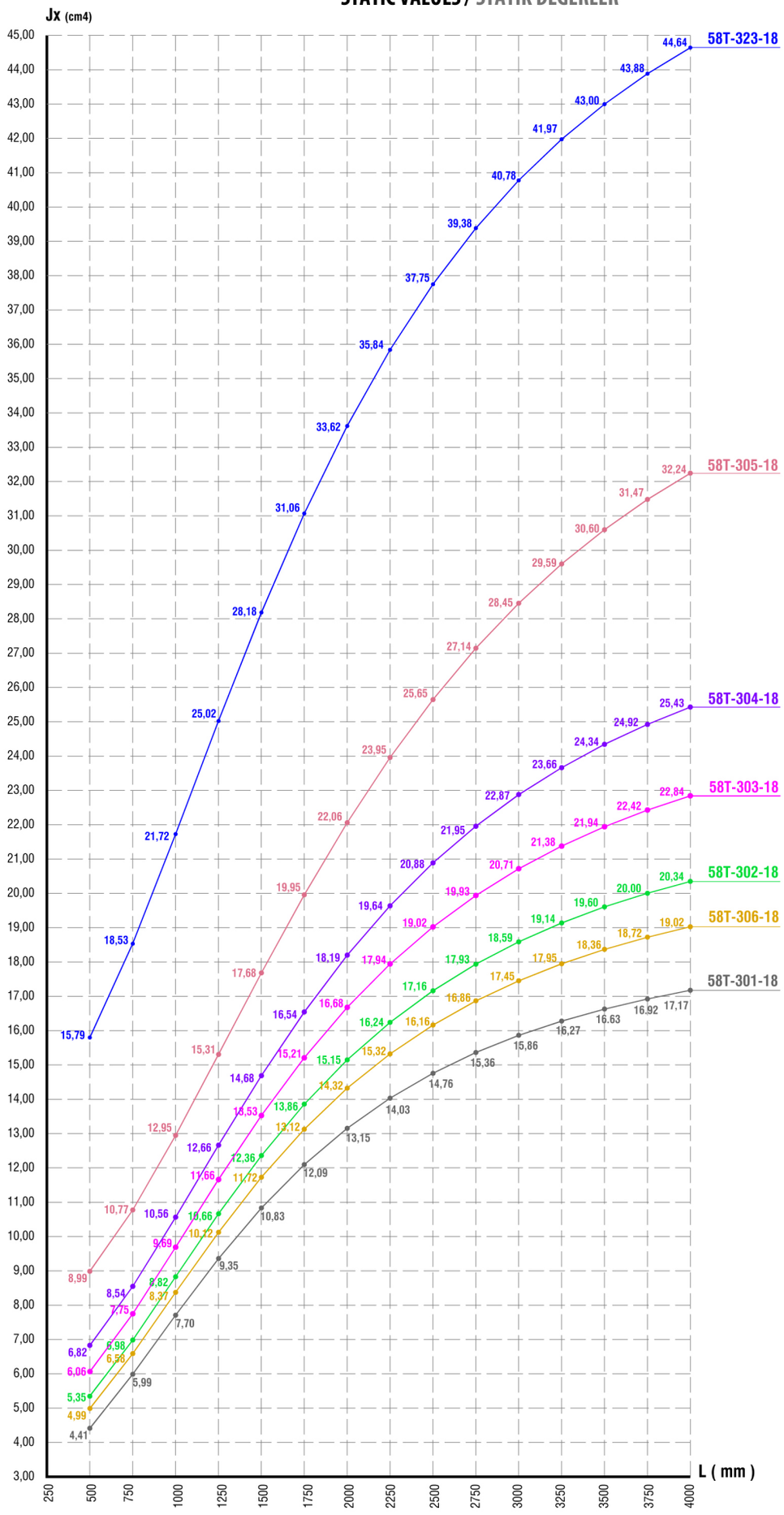

Jy Values / Jy Degerleri

Profile / Profil	Jy(cm4)
58T-301-18	8,03
58T-302-18	15,29
58T-306-18	11,77
58T-303-18	24,06
58T-304-18	36,67
58T-305-18	92,77
58T-323-18	18,88

Wall Thickness
Et Kalınlık
1.5 mm
2.0 mm

STATIC VALUES / STATİK DEĞERLER

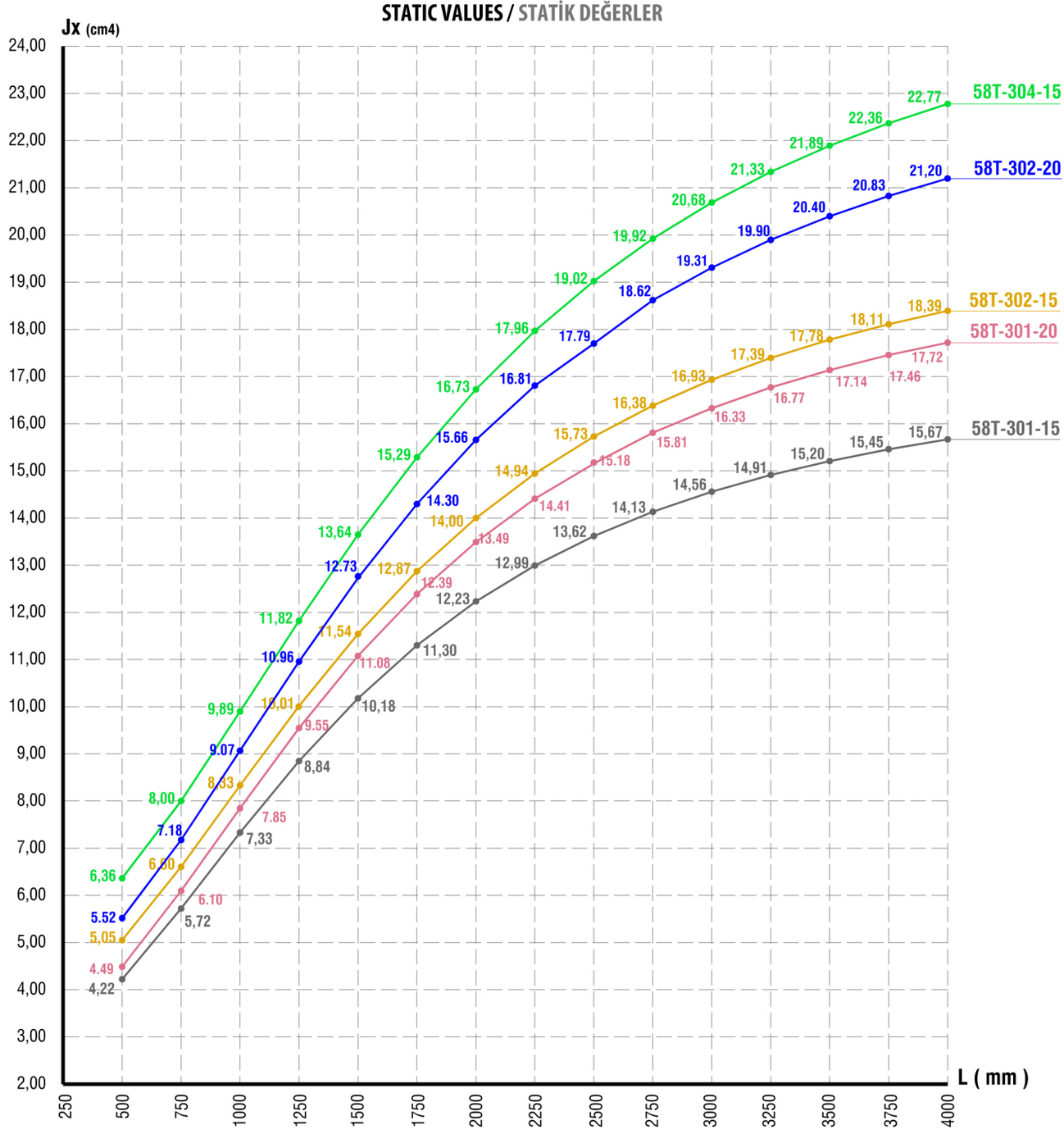

Jy Values / Jy Degerleri

Profile / Profil	58T-301-15	58T-302-15	58T-304-15	58T-301-20	58T-302-20
Jy(cm4)	7,52	14,19	33,68	8,25	15,71

Wall Thickness
Et Kalınlık
1.8 mm
1.5 mm

STATIC VALUES / STATİK DEĞERLER

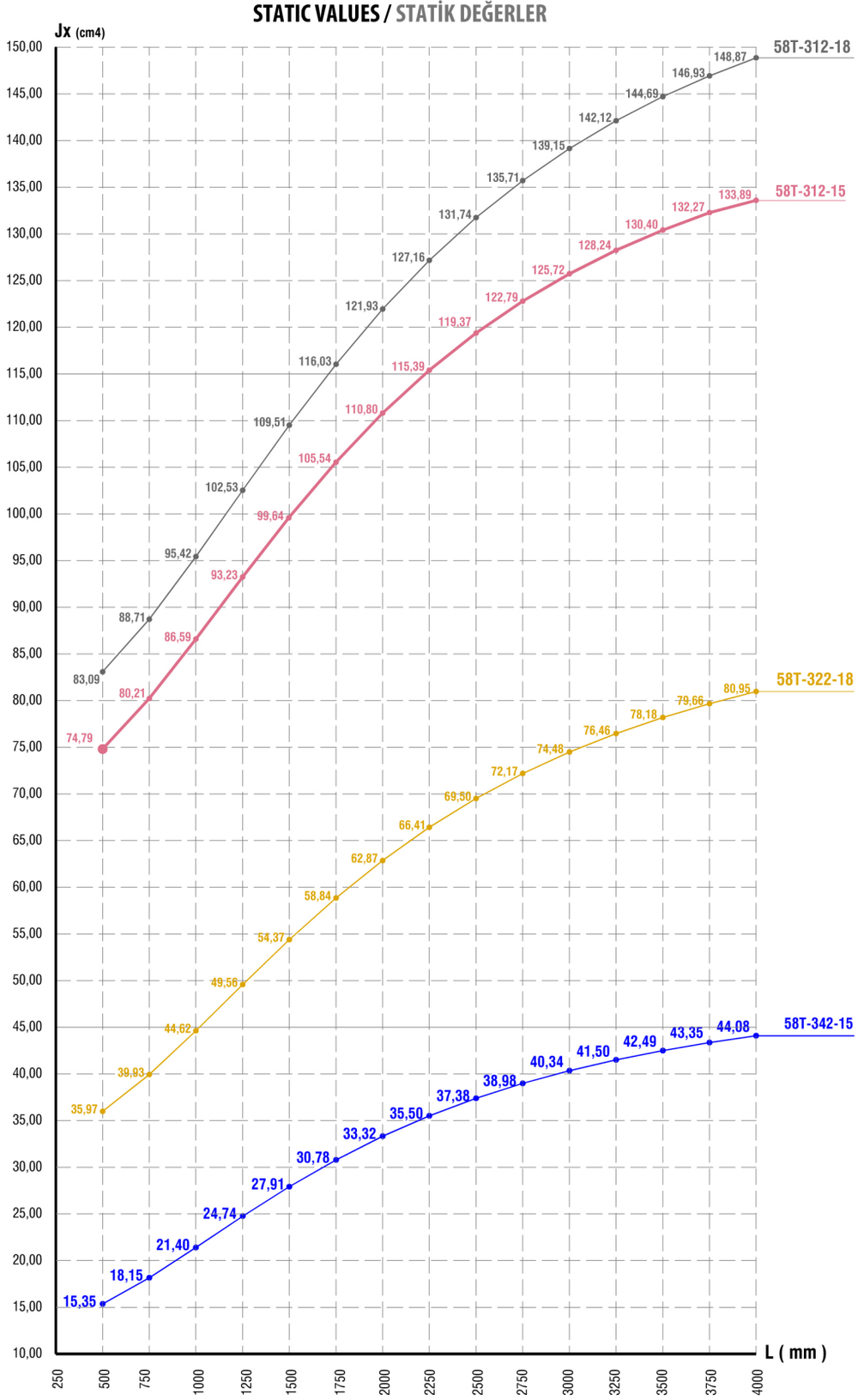

Jy Values / Jy Degerleri

Profile / Profil	58T-312-18	58T-322-18	58T-312-15	58T-342-15
Jy(cm4)	27,34	27,09	24,40	20,65

STATIC VALUES / STATİK DEĞERLER

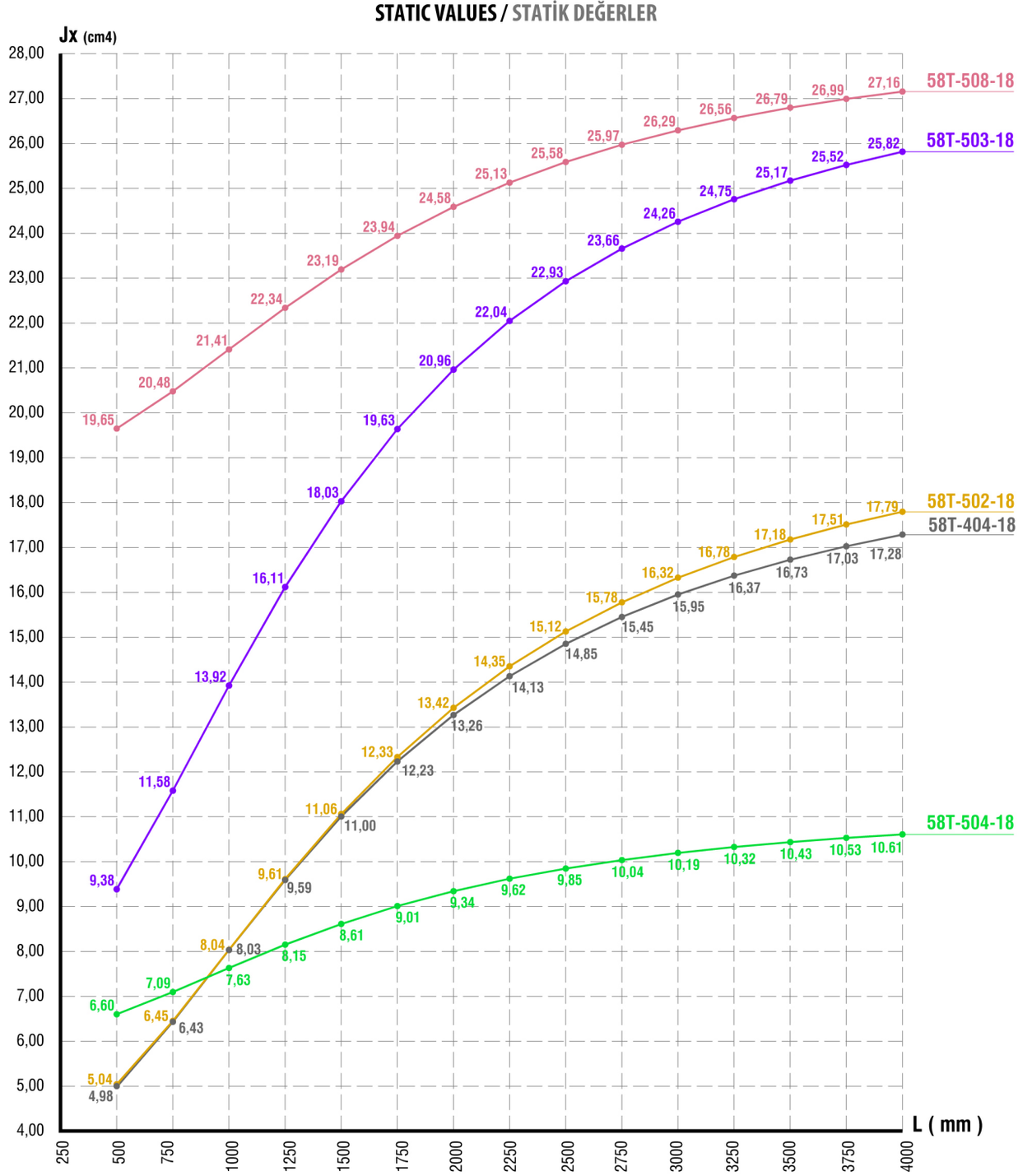

Jy Values / Jy Degerleri

Profile / Profil	58T-404-18	58T-502-18	58T-503-18	58T-504-18 *	58T-508-18
Jy(cm4)	7,68	11,01	10,41	11,30	28,57

* **The static value is according to 45° /** Statik deger 45° göre alınmıştır.

58T

PROFILE INDEX / PROFİL İNDEKS

PROFILES / PROFİLLER

CODE KOD	DRAWING ÇİZİM	WEIGHT AĞIRLIK Kg/m
58T-102-18	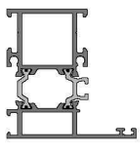	1.471
58T-102-15		1.352
58T-112-15	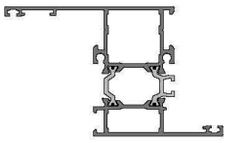	1.557
58T-122-18	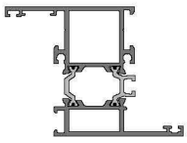	1.608
58T-132-15	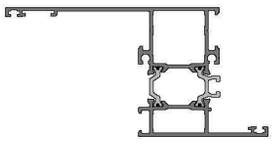	1.661
58T-142-15	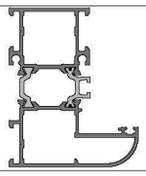	1.565
58T-103-18	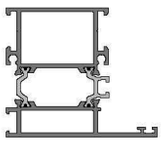	1.663
58T-113-18	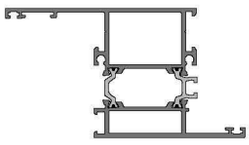	1.892
58T-133-18	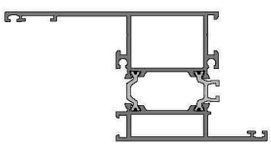	1.957
58T-104-18	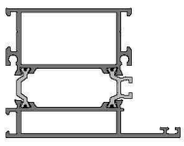	1.860
58T-105-18	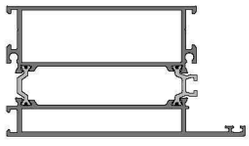	2.441

PROFILES / PROFİLLER

CODE KOD	DRAWING ÇİZİM	WEIGHT AĞIRLIK Kg/m
58T-123-18	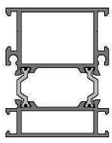	1.530
58T-201-18	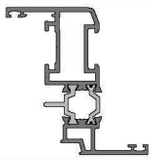	1.420
58T-201-15		1.285
58T-201-20		1.461
58T-202-18	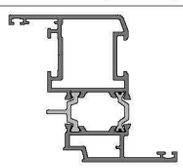	1.657
58T-202-15		1.477
58T-202-20		1.722
58T-203-18	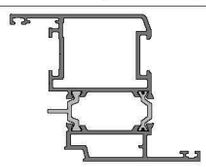	1.850
58T-204-18	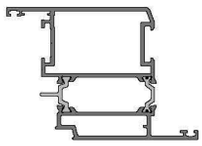	2.037
58T-204-15		1.806
58T-204-20		2.138
58T-205-18	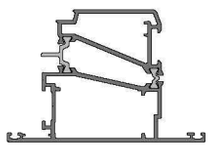	2.235
58T-205-15		1.963
58T-205-20		2.308
58T-206-18	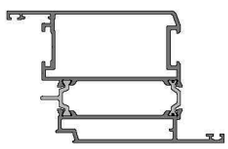	2.311
58T-206-20		2.388
58T-207-18	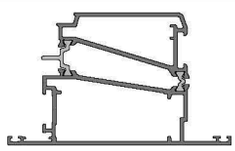	2.495
58T-207-20		2.581
58T-215-18	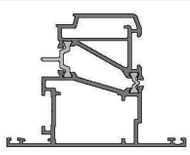	2.103
58T-301-18	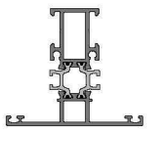	1.360
58T-301-15		1.262
58T-301-20		1.394

PROFILES / PROFİLLER

CODE KOD	DRAWING ÇİZİM	WEIGHT AĞIRLIK Kg/m
58T-306-18	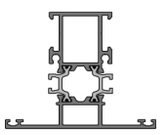	1.510
58T-302-18	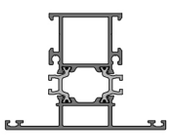	1.604
58T-302-15		1.470
58T-302-20		1.662
58T-303-18	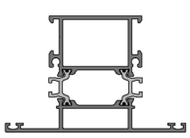	1.791
58T-304-18	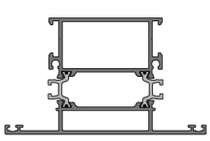	1.992
58T-304-15		1.800
58T-305-18	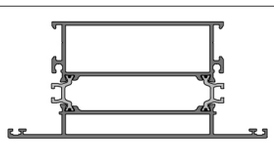	2.574
58T-312-18	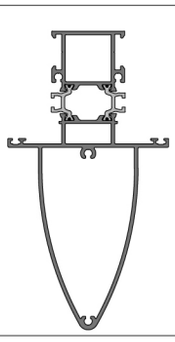	2.650
58T-312-15		2.360
58T-322-18	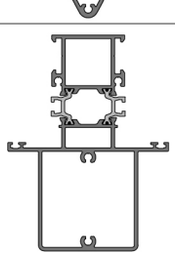	2.438
58T-323-18	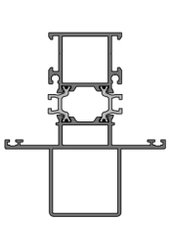	2.036

PROFILES / PROFİLLER

CODE KOD	DRAWING ÇİZİM	WEIGHT AĞIRLIK Kg/m
58T-342-15	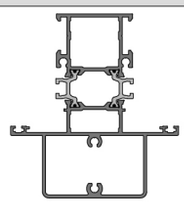	2.017
58T-402-18	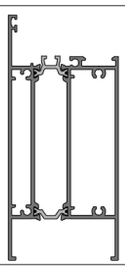	2.886
58T-412-00		6.044
58T-403-18	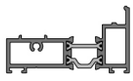	1.079
20-162-00		1.269
60T-406-00	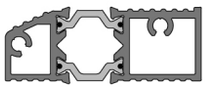	0.932
58T-405-00		0.374
20-101-00		0.354
07-211-00		0.183

PROFILES / PROFİLLER

CODE KOD	DRAWING ÇİZİM	WEIGHT AĞIRLIK Kg/m
58T-501-18	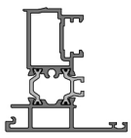	1.484
58T-545-18	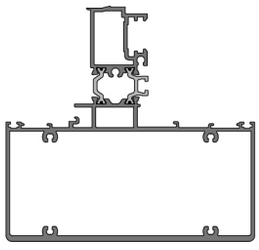	1.511
58T-404-18	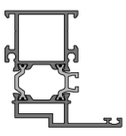	1.439
58T-502-18	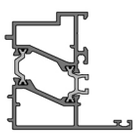	1.583
58T-503-18	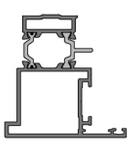	1.461
58T-507-18	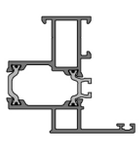	1.363
58T-509-25	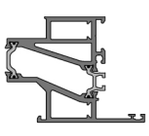	2.304
18-351-00	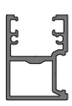	1.124
58T-508-18	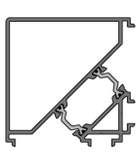	1.720

PROFILES / PROFİLLER

CODE KOD	DRAWING ÇİZİM	WEIGHT AĞIRLIK Kg/m
58T-504-18		1.332
58T-518-18	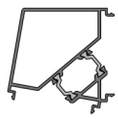	1.532
07-112-00		0.148
58T-511-00		0.183
07-111-00		0.233
07-506-013		0.186
07-510-013		0.201
07-512-013		0.210
07-102-00	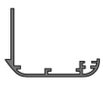	0.324
07-103-00		0.488
07-105-00		0.875
07-131-011		0.568
07-131-012		0.618

PROFILES / PROFİLLER

CODE KOD	DRAWING ÇİZİM	WEIGHT AĞIRLIK Kg/m
07-131-018		0.902
07-133-011		1.064
07-132-011		0.802
08-103-00		0.237
08-104-00		0.256
08-105-00		0.260
08-107-00		0.262
08-108-00		0.269
08-109-00		0.280
08-110-00		0.266

PROFILES / PROFİLLER

CODE KOD	DRAWING ÇİZİM	WEIGHT AĞIRLIK Kg/m
08-111-00		0.216
08-112-00		0.291
08-113-00		0.300
08-114-00		0.306
08-115-00		0.317
08-116-00		0.331
08-117-00		0.309
08-120-00	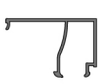	0.345
08-121-00	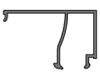	0.349
09-121-00		2.395

PROFILES / PROFİLLER

CODE KOD	DRAWING ÇİZİM	WEIGHT AĞIRLIK Kg/m
09-101-00		2.561
09-110-00		3.501
09-122-00		3.294
09-103-00		3.689
09-123-00		4.369
09-124-00	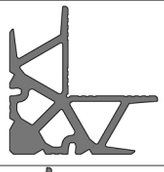	4.572
09-105-00		5.453
09-117-00	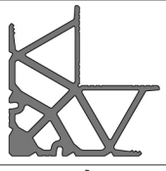	7.012
09-113-00	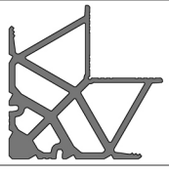	7.241

PROFILES / PROFİLLER

CODE KOD	DRAWING ÇİZİM	WEIGHT AĞIRLIK Kg/m
09-114-00	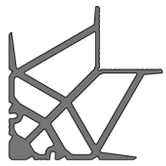	8.744
09-901-00		0.582
09-902-00		0.552
09-903-00		0.856

PERIMETRIC PROFILES / PERİMETRİK PROFİLLER

CODE KOD	DRAWING ÇİZİM	WEIGHT AĞIRLIK Kg/m
58T-252-18	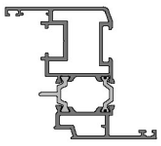	1.713
58T-252-15	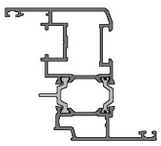	1.515
58T-256-18	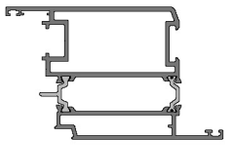	2.548
58T-551-18	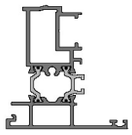	1.509

HIDDEN SASH PROFILES / GİZLİ KANAT PROFİLLERİ

CODE KOD	DRAWING ÇİZİM	WEIGHT AĞIRLIK Kg/m
58T-131-15	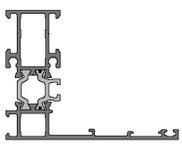	1.333
58T-141-15	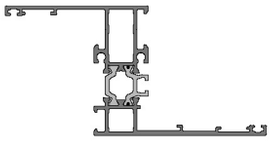	1.533
58T-231-15	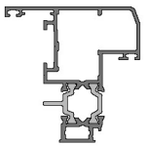	1.283
58T-331-15	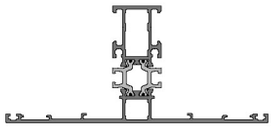	1.636
58T-332-15	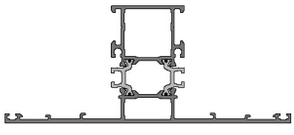	1.843

HIDDEN SASH PROFILES / GİZLİ KANAT PROFİLLERİ

CODE KOD	DRAWING ÇİZİM	WEIGHT AĞIRLIK Kg/m
58T-333-15	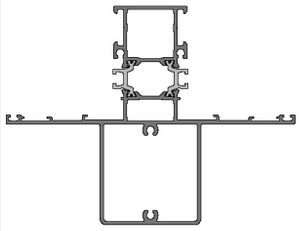	2.677
58T-334-15	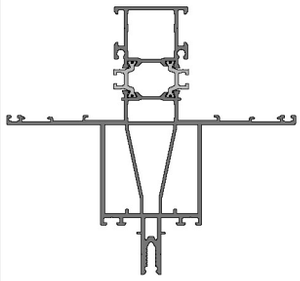	3.430
58T-335-15	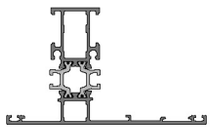	1.450
58T-531-15		1.044
58T-831-00		0.129

58T

PROFILES / PROFİLLER
1.8 mm

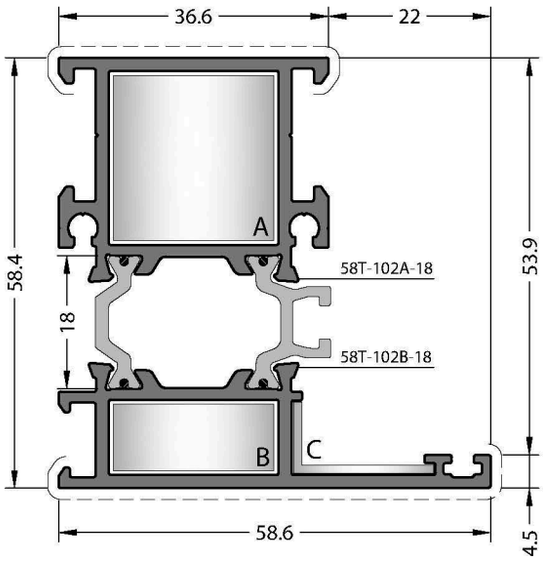

CODE / KOD

58T-102-18

THEORETICAL WEIGHT kg/m

TEORİK AĞIRLIK kg/m

1.471

CORNER JOINTS

KÖŞE BAĞLANTILAR

A CC-103-23.0

B CC-103-09.6

C EM58-21

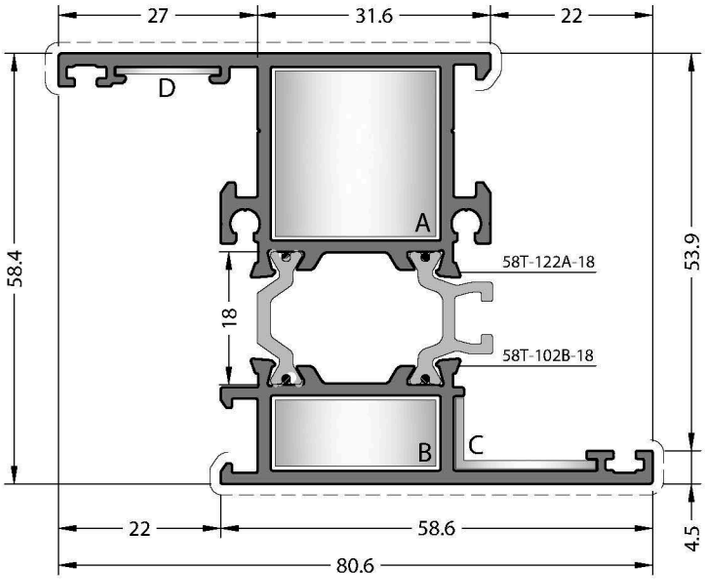

CODE / KOD

58T-122-18

THEORETICAL WEIGHT kg/m

TEORİK AĞIRLIK kg/m

1.608

CORNER JOINTS

KÖŞE BAĞLANTILAR

A CC-103-23.0

B CC-103-09.6

C EM58-21

D MK-20.1

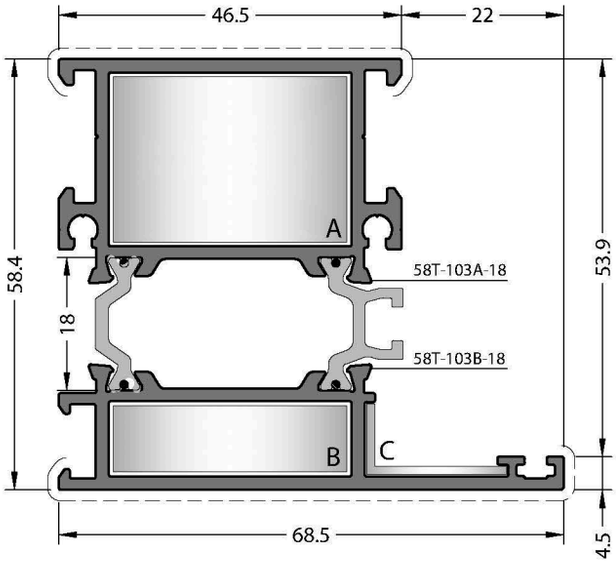

CODE / KOD

58T-103-18

THEORETICAL WEIGHT kg/m

TEORİK AĞIRLIK kg/m

1.663

CORNER JOINTS

KÖŞE BAĞLANTILAR

A CC-124-23.0

B CC-124-09.6

C EM58-21

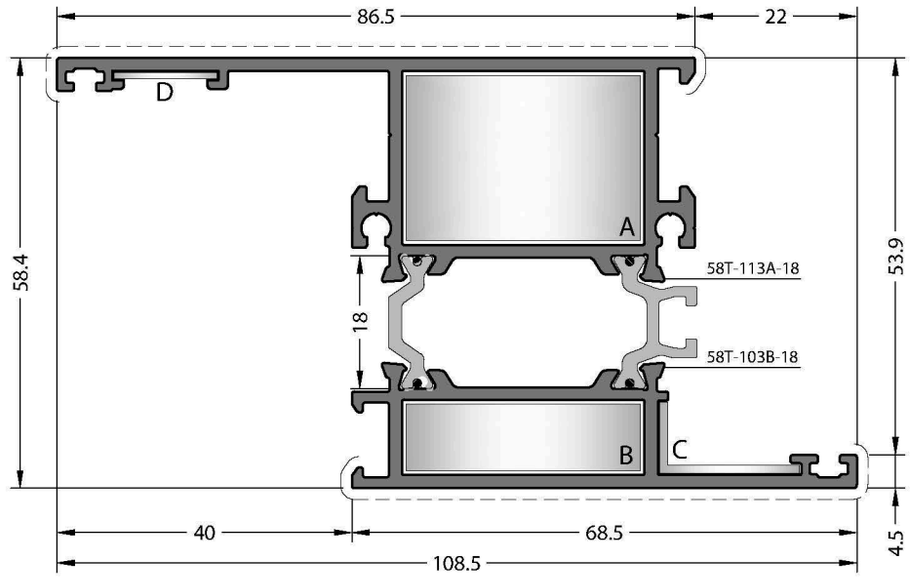

CODE / KOD

58T-113-18

THEORETICAL WEIGHT kg/m

TEORİK AĞIRLIK kg/m

1.892

CORNER JOINTS

KÖŞE BAĞLANTILAR

A CC-124-23.0

B CC-124-09.6

C EM58-21

D MK-20.1

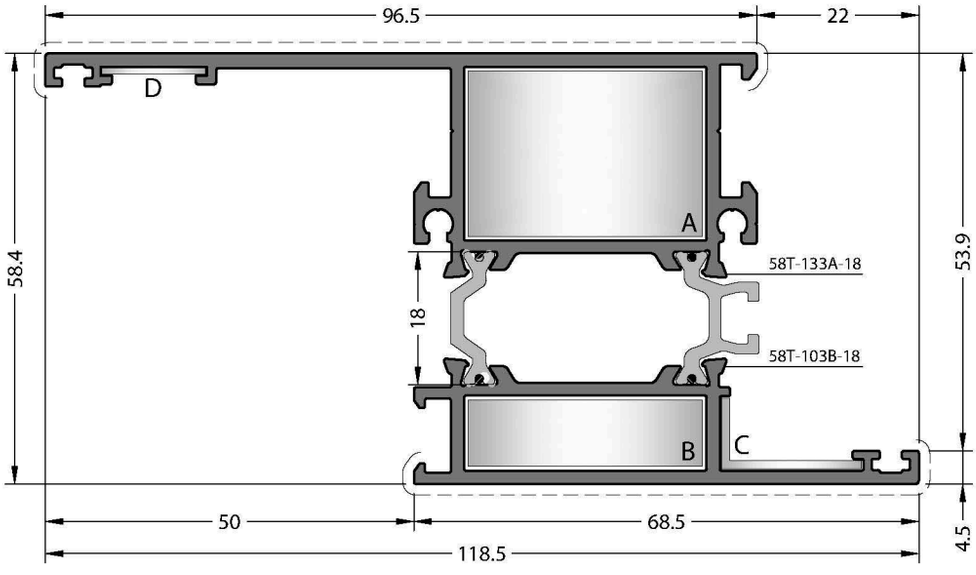

CODE / KOD

58T-133-18

THEORETICAL WEIGHT kg/m

TEORİK AĞIRLIK kg/m

1.957

CORNER JOINTS

KÖŞE BAĞLANTILAR

A CC-124-23.0

B CC-124-09.6

C EM58-21

D MK-20.1

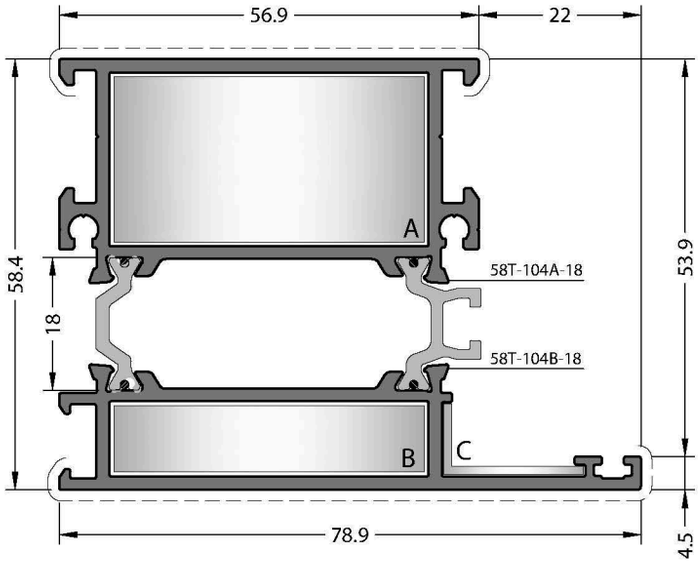

CODE / KOD

58T-104-18

THEORETICAL WEIGHT kg/m

TEORİK AĞIRLIK kg/m

1.860

CORNER JOINTS

KÖŞE BAĞLANTILAR

A CC-105-23.0

B CC-105-09.6

C EM58-21

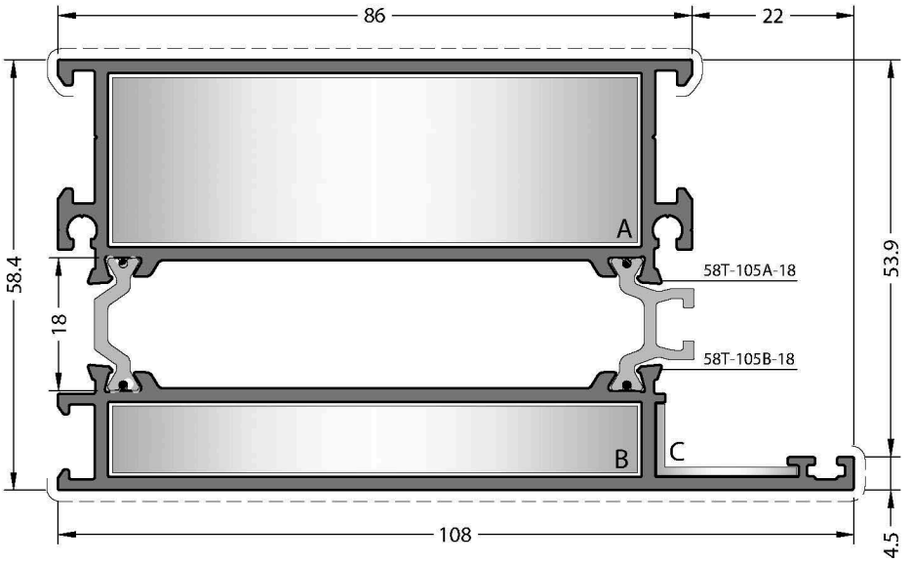

CODE / KOD

58T-105-18

THEORETICAL WEIGHT kg/m

TEORİK AĞIRLIK kg/m

2.441

CORNER JOINTS

KÖŞE BAĞLANTILAR



A CC-114-23.0



B CC-114-09.6



C EM58-21

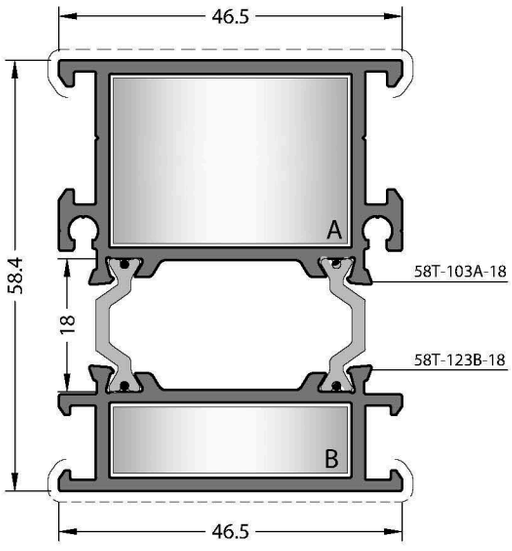

CODE / KOD

58T-123-18

THEORETICAL WEIGHT kg/m

TEORİK AĞIRLIK kg/m

1.530

CORNER JOINTS

KÖŞE BAĞLANTILAR



A CC-124-23.0



B CC-124-09.6

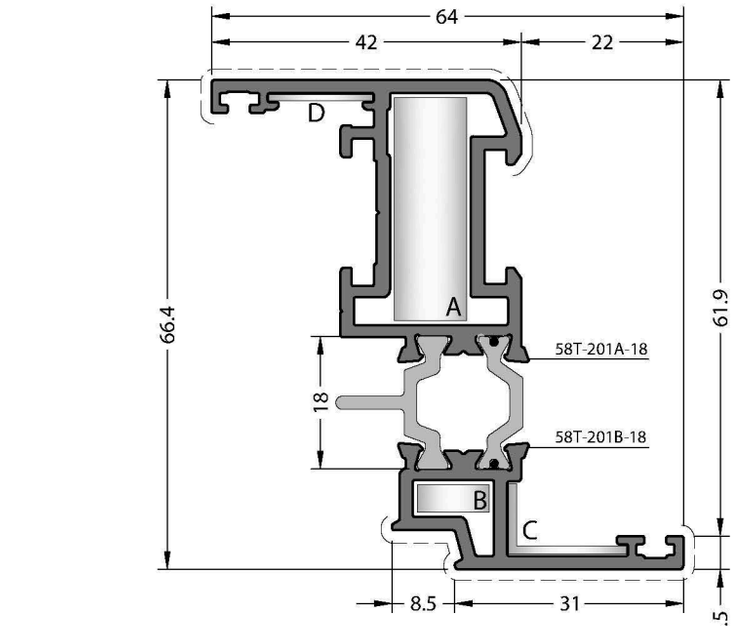

CODE / KOD

58T-201-18

THEORETICAL WEIGHT kg/m

TEORİK AĞIRLIK kg/m

1.420

CORNER JOINTS

KÖŞE BAĞLANTILAR


A CC-101-30.8


B CC-101-04.6


C EM58-22


D MK-20.1

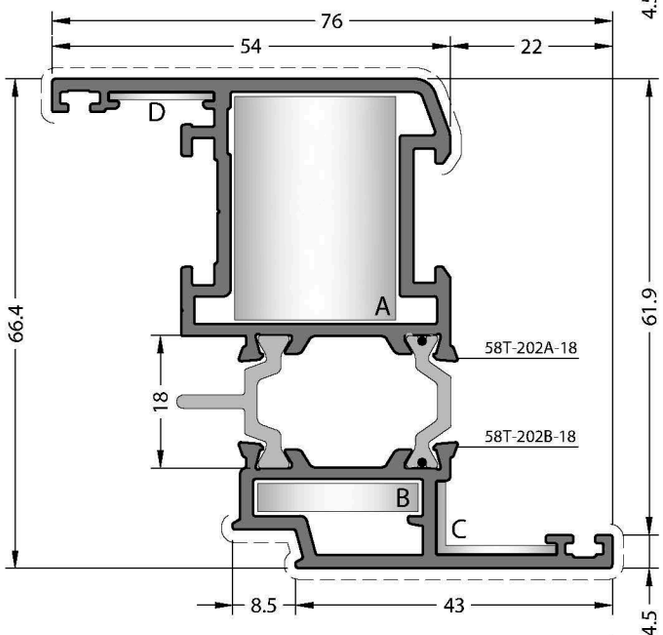

CODE / KOD

58T-202-18

THEORETICAL WEIGHT kg/m

TEORİK AĞIRLIK kg/m

1.657

CORNER JOINTS

KÖŞE BAĞLANTILAR


A CC-103-30.8


B CC-103-04.6


C EM58-22


D MK-20.1

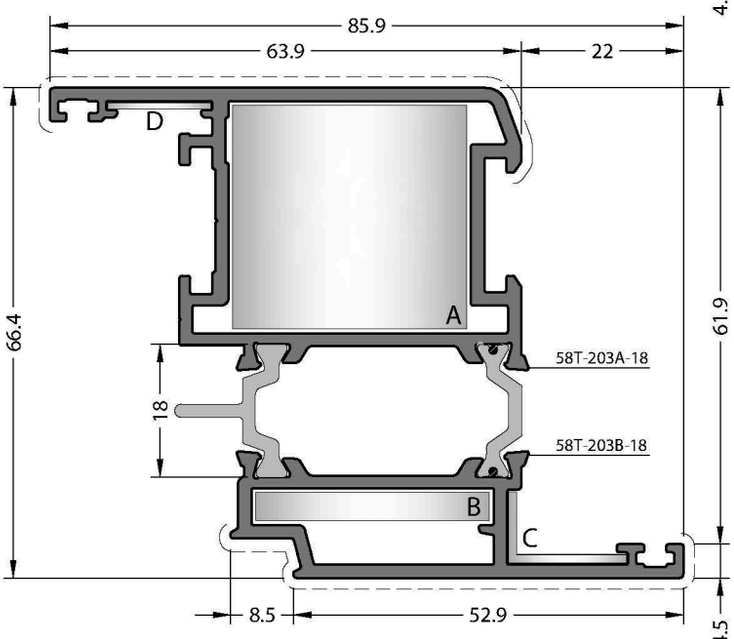

CODE / KOD

58T-203-18

THEORETICAL WEIGHT kg/m

TEORİK AĞIRLIK kg/m

1.850

CORNER JOINTS

KÖŞE BAĞLANTILAR


A CC-124-30.8


B CC-124-04.6


C EM58-22


D MK-20.1

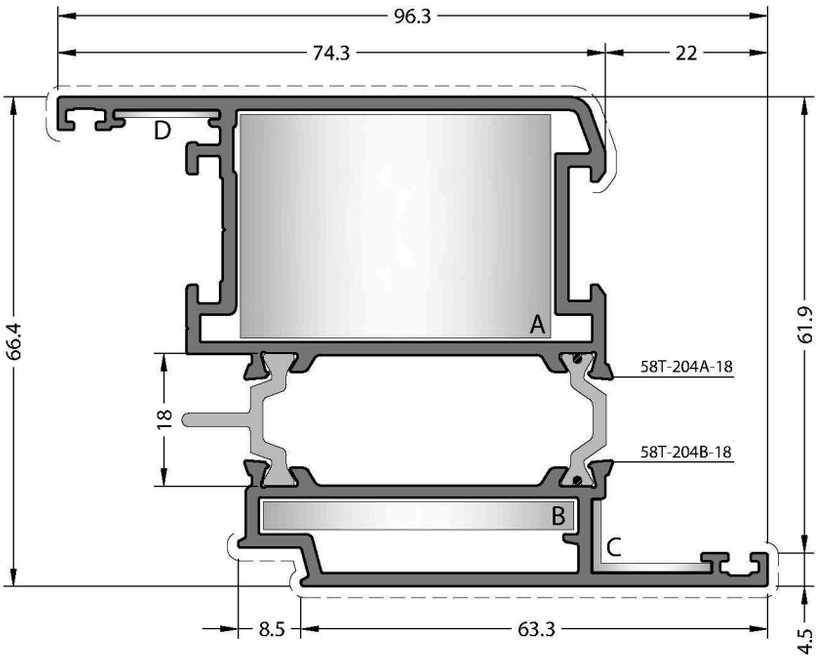

CODE / KOD

58T-204-18

THEORETICAL WEIGHT kg/m

TEORİK AĞIRLIK kg/m

2.037

CORNER JOINTS

KÖŞE BAĞLANTILAR

A CC-105-30.8

B CC-105-04.6

C EM58-22

D MK-20.1

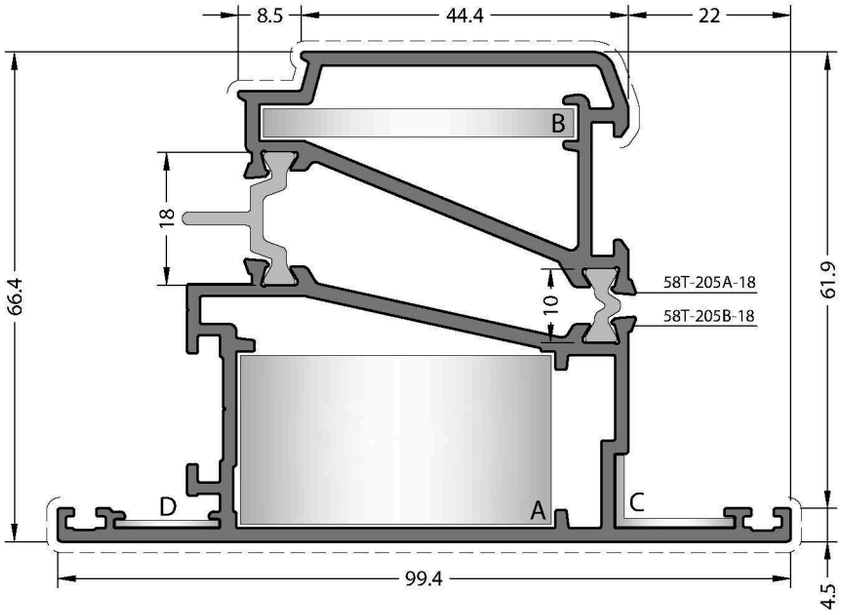

CODE / KOD

58T-205-18

THEORETICAL WEIGHT kg/m

TEORİK AĞIRLIK kg/m

2.235

CORNER JOINTS

KÖŞE BAĞLANTILAR

A CC-105-23.6

B CC-105-04.6

C EM58-22

D MK-20.1

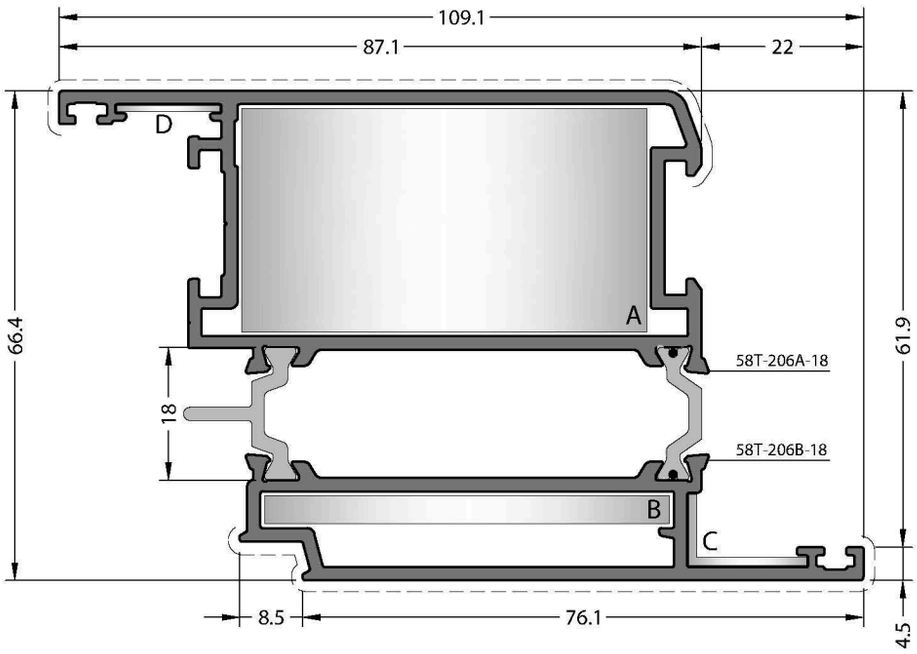

CODE / KOD

58T-206-18

THEORETICAL WEIGHT kg/m

TEORİK AĞIRLIK kg/m

2.311

CORNER JOINTS

KÖŞE BAĞLANTILAR



A CC-113-31.0



B CC-113-04.5



C EM58-22



D MK-20.1

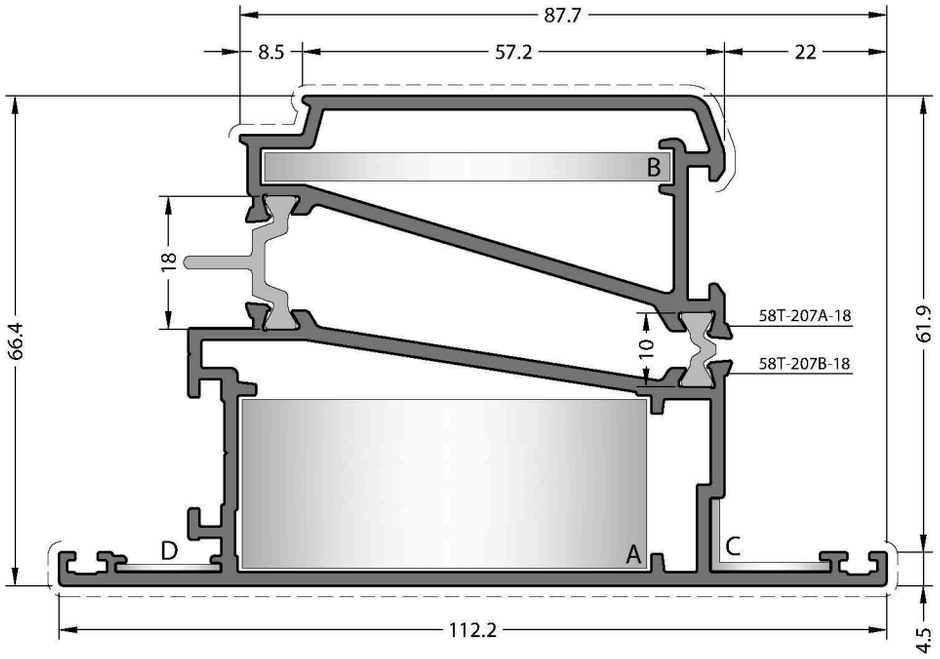

CODE / KOD

58T-207-18

THEORETICAL WEIGHT kg/m

TEORİK AĞIRLIK kg/m

2.495

CORNER JOINTS

KÖŞE BAĞLANTILAR



A CC-113-23.5



B CC-113-04.5



C EM58-22



D MK-20.1

Exterior Window Sash Profile / Dışa Açılır Pencere Kanat Profili

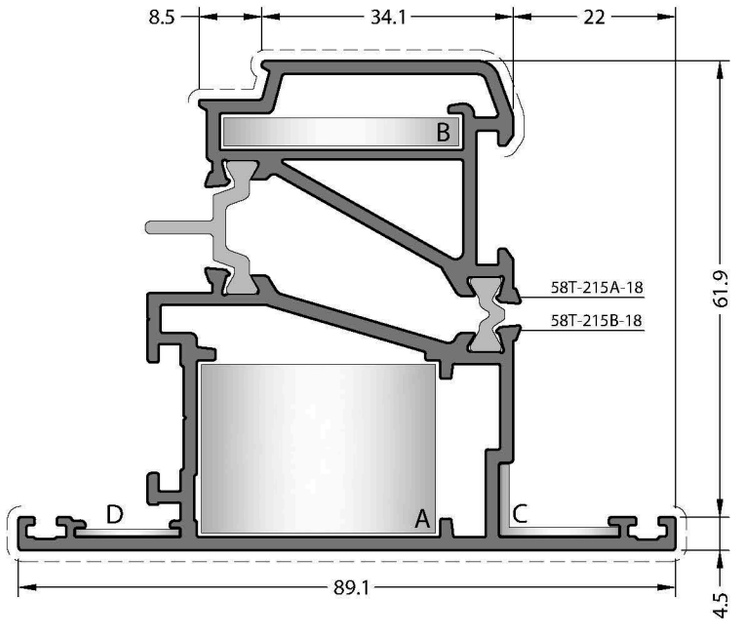

CODE / KOD

58T-215-18

THEORETICAL WEIGHT kg/m

TEORİK AĞIRLIK kg/m

2.103

CORNER JOINTS

KÖŞE BAĞLANTILAR


A CC-124-23.5


B CC-124-04.6


C EM58-22


D MK-20.1

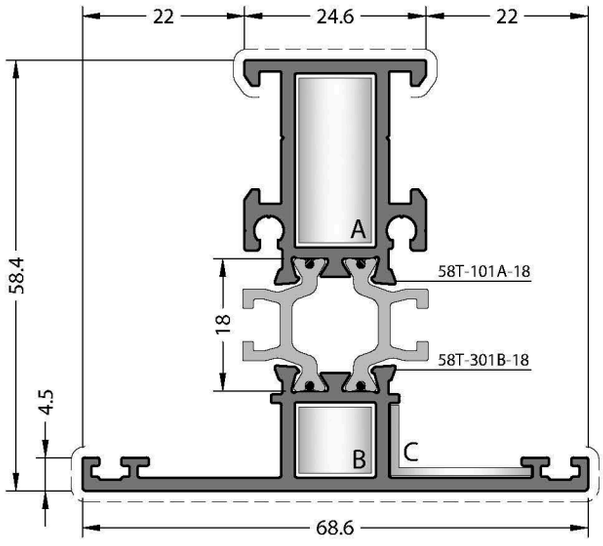

CODE / KOD

58T-301-18

THEORETICAL WEIGHT kg/m

TEORİK AĞIRLIK kg/m

1.360

T JUNCTION

ÇEKTİRME BAĞLANTI



A CC-903-10.5

FOR FRAME / *KASA İÇİN*



B CC-901-10.5

FOR SASH / *KANAT İÇİN*



B CC-902-10.5

CORNER JOINTS

KÖŞE BAĞLANTILAR



A CC-101-23.0



B CC-101-09.6



C EM58-21

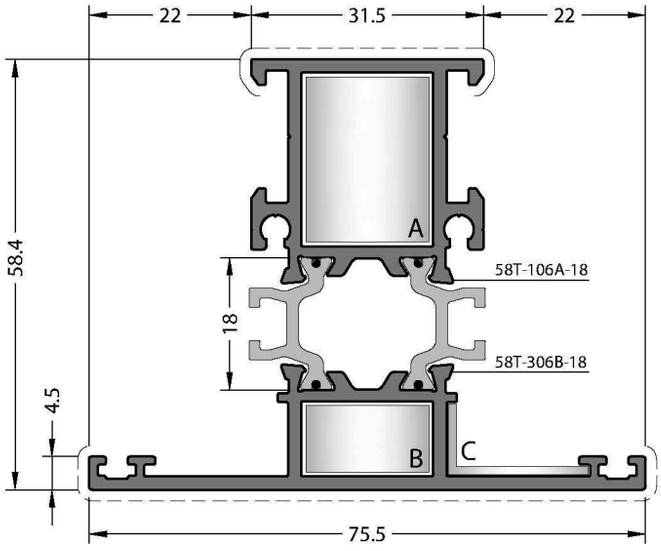

CODE / KOD

58T-306-18

THEORETICAL WEIGHT kg/m

TEORİK AĞIRLIK kg/m

1.510

T JUNCTION

ÇEKTİRME BAĞLANTI



A CC-903-17.4

FOR FRAME / *KASA İÇİN*



B CC-901-17.4

FOR SASH / *KANAT İÇİN*



B CC-902-17.4

CORNER JOINTS

KÖŞE BAĞLANTILAR



A CC-122-23.0



B CC-122-09.6



C EM58-21

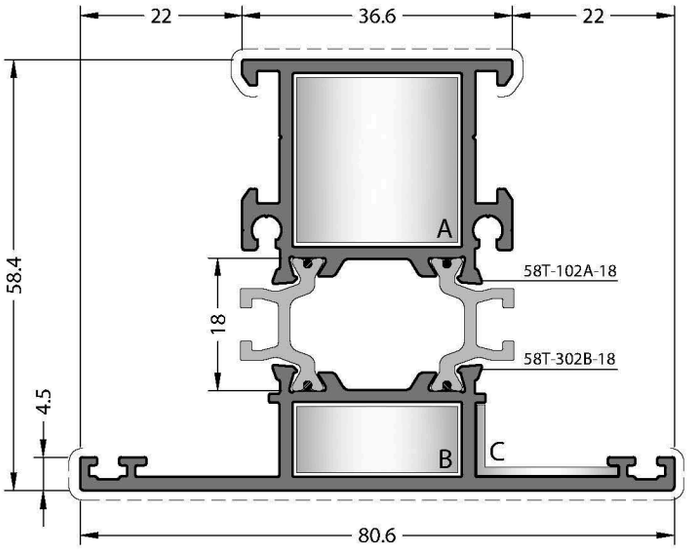

CODE / KOD

58T-302-18

THEORETICAL WEIGHT kg/m

TEORİK AĞIRLIK kg/m

1.604

T JUNCTION

ÇEKTİRME BAĞLANTI



A CC-903-22.5

FOR FRAME / *KASA İÇİN*



B CC-901-22.5

FOR SASH / *KANAT İÇİN*



B CC-902-22.5

CORNER JOINTS

KÖŞE BAĞLANTILAR



A CC-103-23.0



B CC-103-09.6



C EM58-21

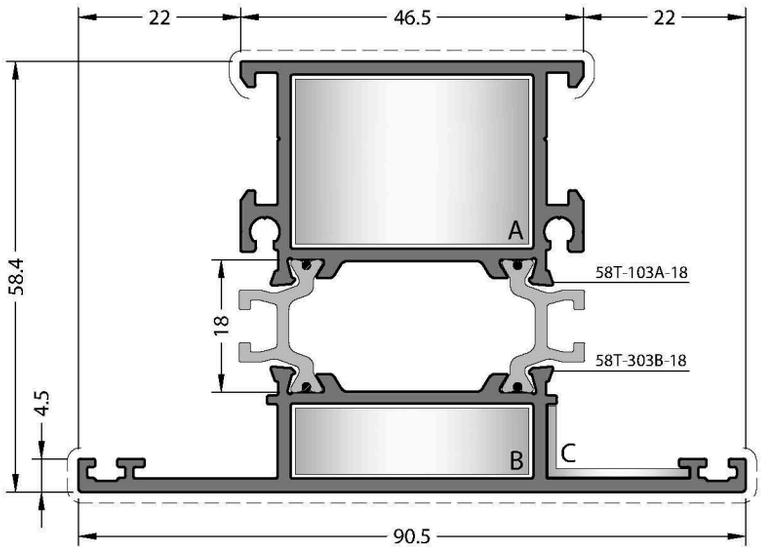

CODE / KOD

58T-303-18

THEORETICAL WEIGHT kg/m
TEORİK AĞIRLIK kg/m

1.791

T JUNCTION
ÇEKTİRME BAĞLANTI

A CC-903-32.4

FOR FRAME / *KASA İÇİN*
B CC-901-32.4

FOR SASH / *KANAT İÇİN*
B CC-902-32.4

CORNER JOINTS
KÖŞE BAĞLANTILAR

A CC-124-23.0

B CC-124-09.6

C EM58-21

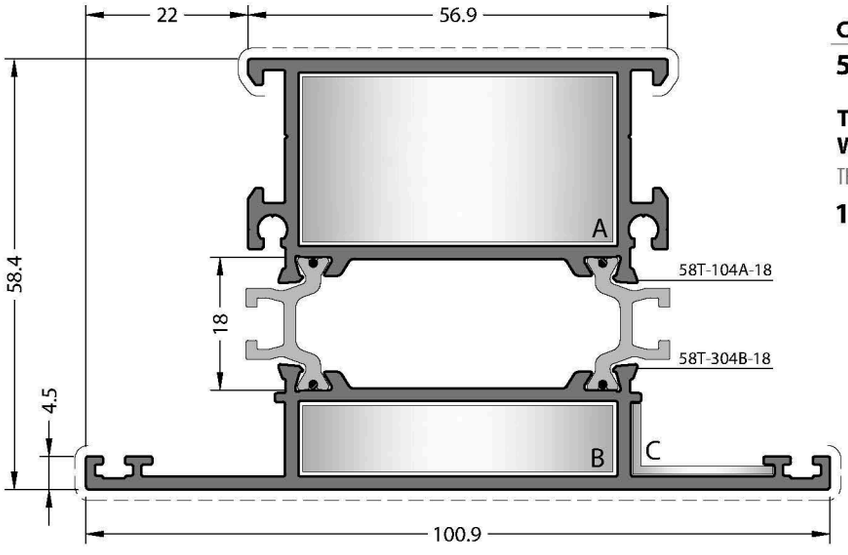

CODE / KOD

58T-304-18

THEORETICAL WEIGHT kg/m
TEORİK AĞIRLIK kg/m

1.992

T JUNCTION
ÇEKTİRME BAĞLANTI

A CC-903-42.8

FOR FRAME / *KASA İÇİN*
B CC-901-42.8

FOR SASH / *KANAT İÇİN*
B CC-902-42.8

CORNER JOINTS
KÖŞE BAĞLANTILAR

A CC-105-23.0

B CC-105-09.6

C EM58-21

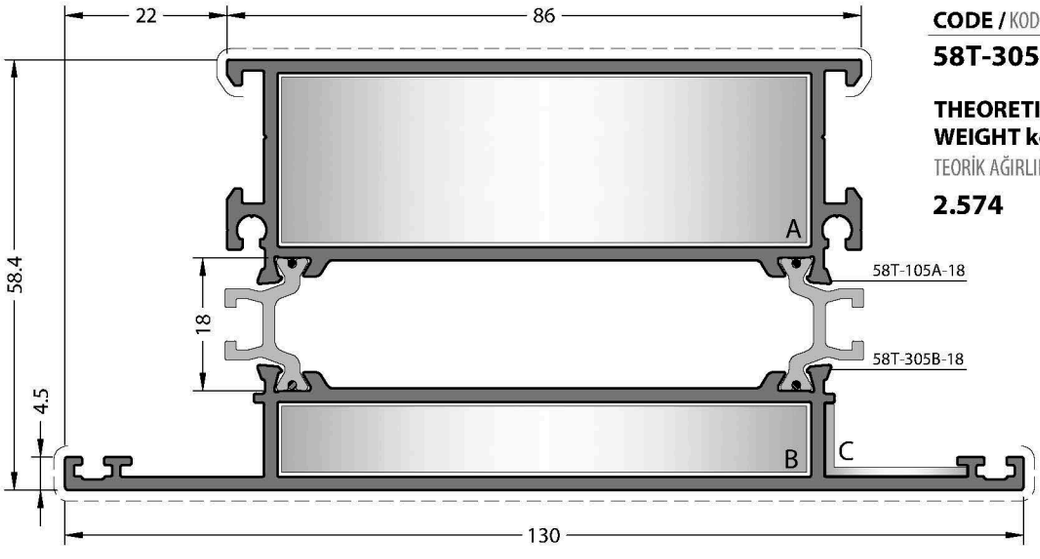

CODE / KOD

58T-305-18

THEORETICAL WEIGHT kg/m
TEORİK AĞIRLIK kg/m

2.574

T JUNCTION
ÇEKTİRME BAĞLANTI

A CC-903-71.9

FOR FRAME / *KASA İÇİN*
B CC-901-71.9

FOR SASH / *KANAT İÇİN*
B CC-902-71.9

CORNER JOINTS
KÖŞE BAĞLANTILAR

A CC-114-23.0

B CC-114-09.6

C EM58-21

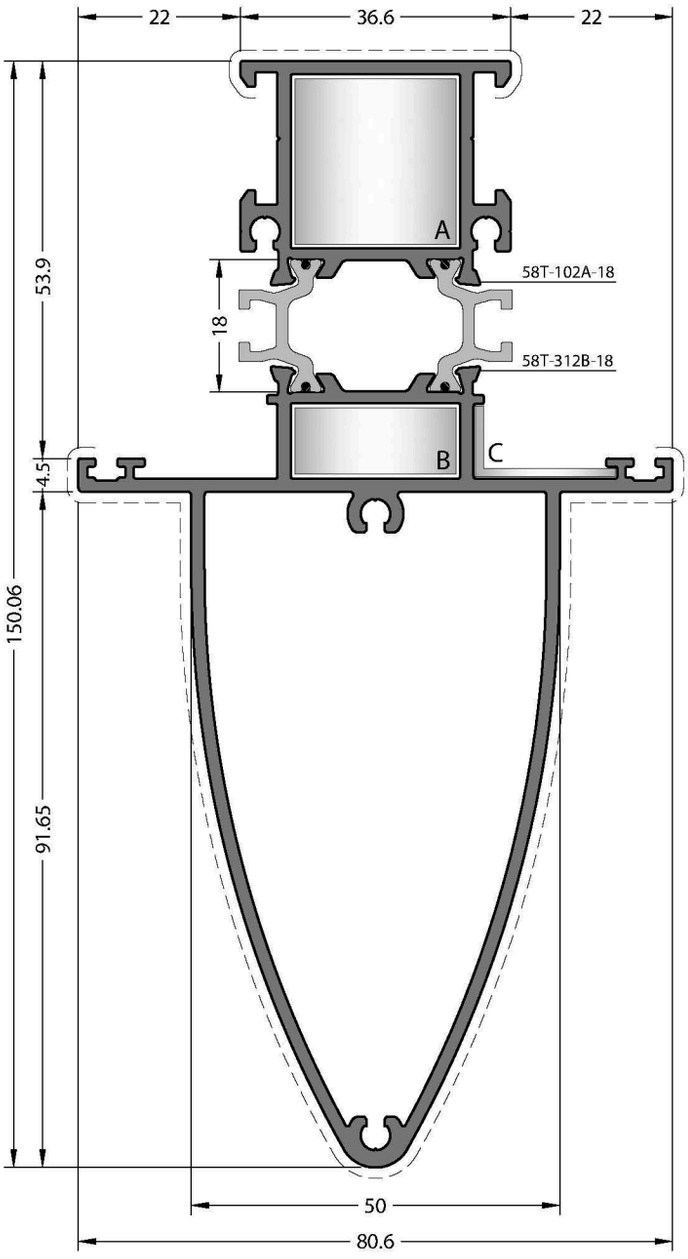

CODE / KOD

58T-312-18

THEORETICAL WEIGHT kg/m
TEORİK AĞIRLIK kg/m

2.650

T JUNCTION
ÇEKTİRME BAĞLANTI

A CC-903-22.5

FOR FRAME / *KASA İÇİN*
B CC-901-22.5

FOR SASH / *KANAT İÇİN*
B CC-902-22.5

CORNER JOINTS
KÖŞE BAĞLANTILAR

A CC-103-23.0

B CC-103-09.6

C EM58-21

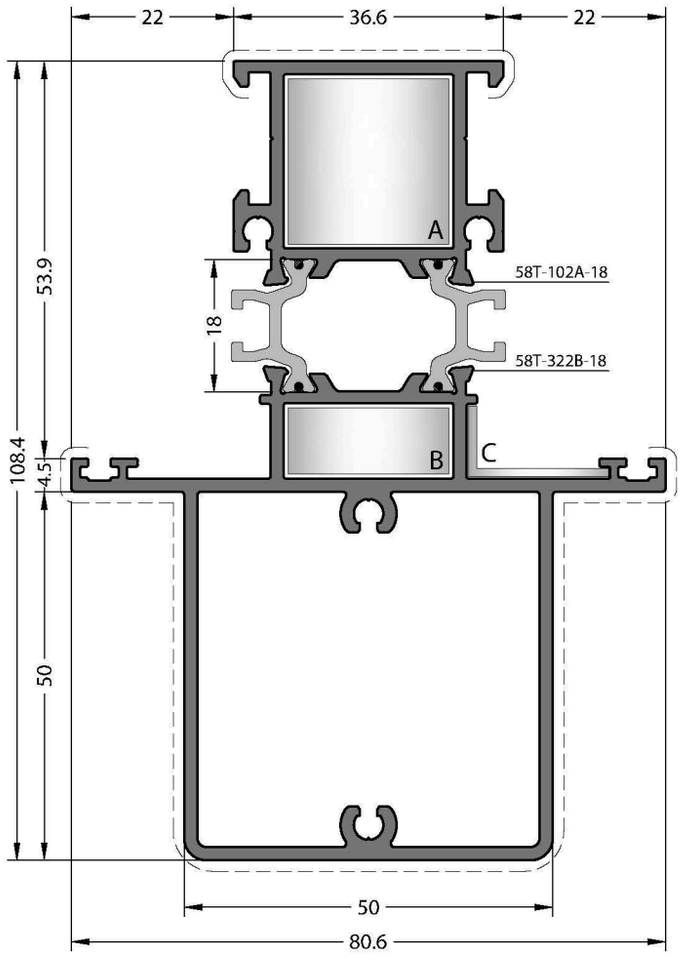

CODE / KOD

58T-322-18

THEORETICAL WEIGHT kg/m
TEORİK AĞIRLIK kg/m

2.438

T JUNCTION
ÇEKTİRME BAĞLANTI

A CC-903-22.5

FOR FRAME / *KASA İÇİN*
B CC-901-22.5

FOR SASH / *KANAT İÇİN*
B CC-902-22.5

CORNER JOINTS
KÖŞE BAĞLANTILAR

A CC-103-23.0

B CC-103-09.6

C EM58-21

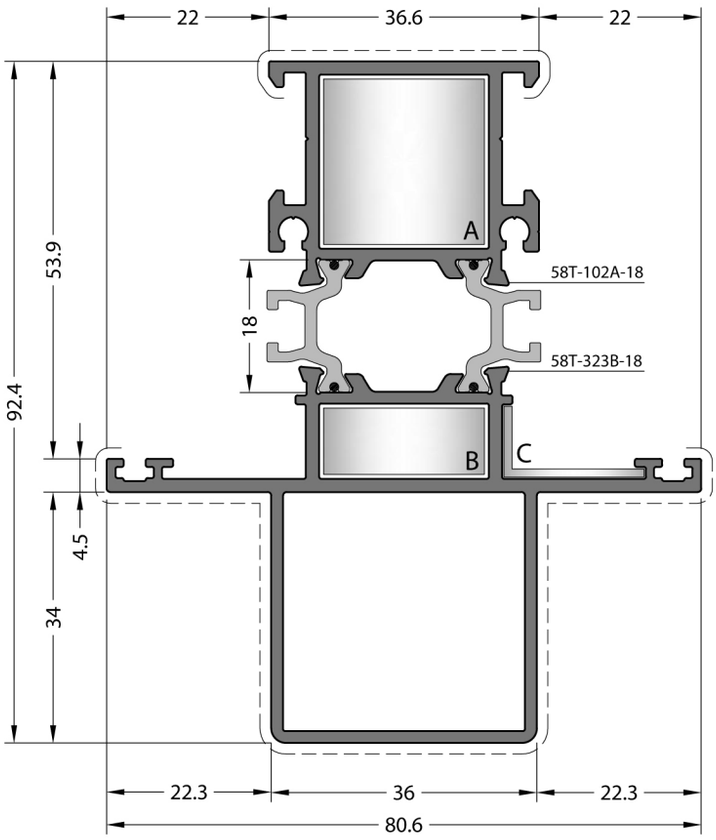

CODE / KOD

58T-323-18

THEORETICAL WEIGHT kg/m

TEORİK AĞIRLIK kg/m

2.036

T JUNCTION

ÇEKTİRME BAĞLANTI



A CC-903-22.5

FOR FRAME / *KASA İÇİN*



B CC-901-22.5

FOR SASH / *KANAT İÇİN*



B CC-902-22.5

CORNER JOINTS

KÖŞE BAĞLANTILAR



A CC-103-23.0



B CC-103-09.6



C EM58-21

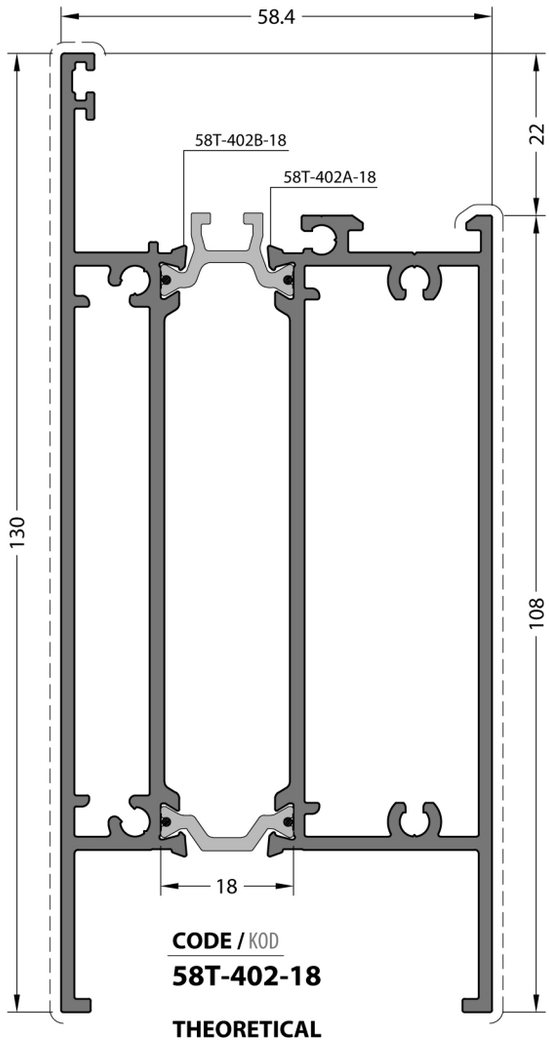

CODE / KOD

58T-402-18

THEORETICAL WEIGHT kg/m

TEORİK AĞIRLIK kg/m

2.886

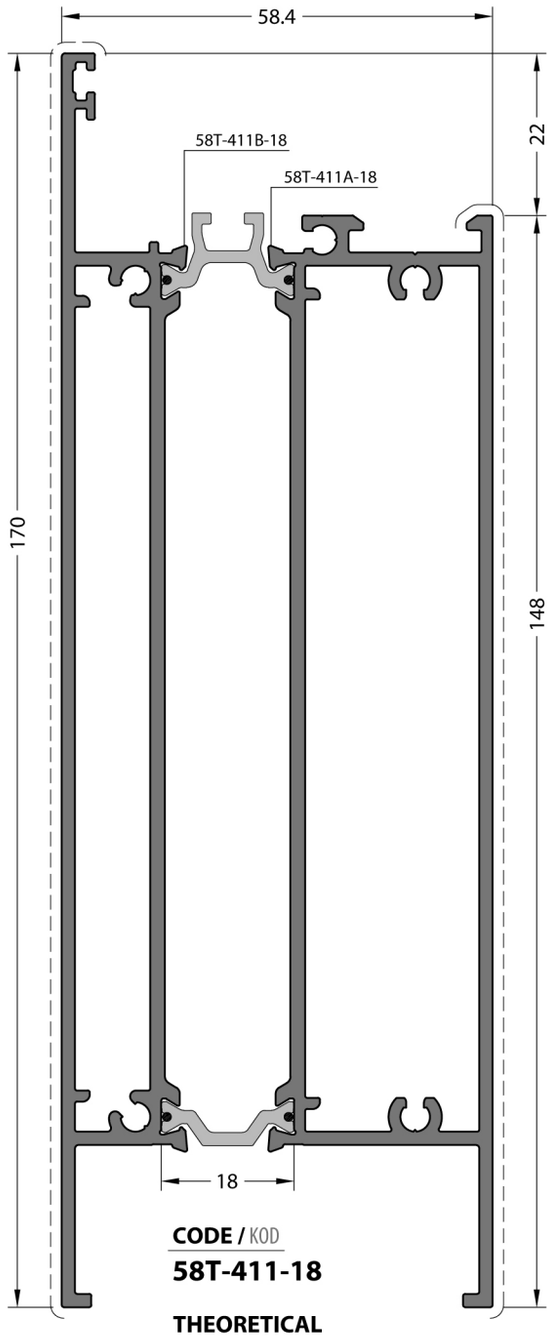

CODE / KOD

58T-411-18

THEORETICAL WEIGHT kg/m

TEORİK AĞIRLIK kg/m

3.190

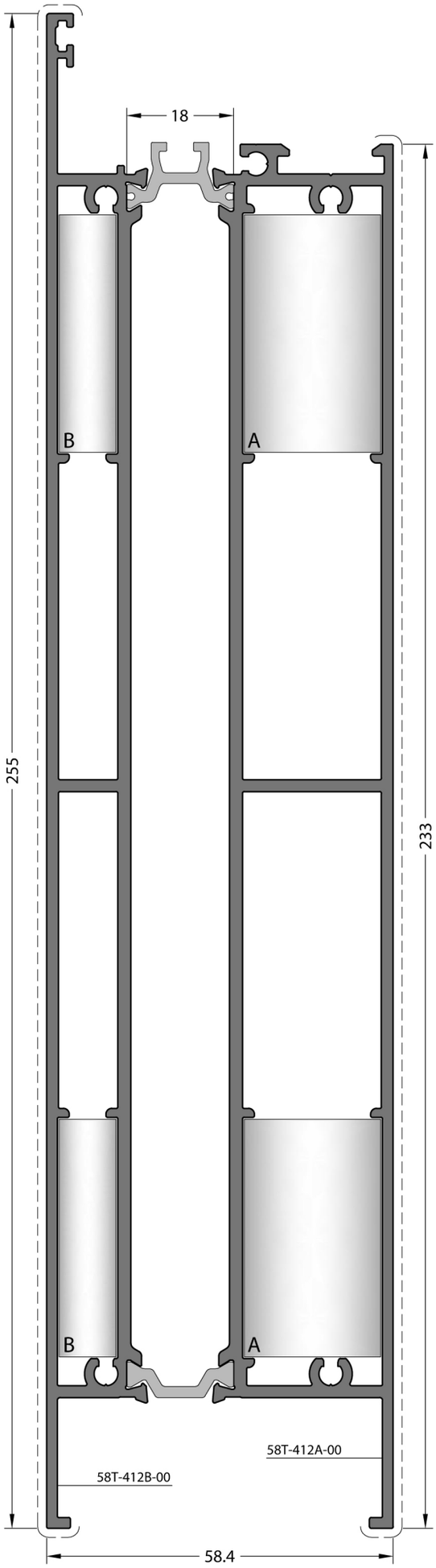

CODE / KOD

58T-412-00

THEORETICAL WEIGHT kg/m

TEORİK AĞIRLIK kg/m

6.044

T JUNCTION

ÇEKTİRME BAĞLANTI



A CC-903-40.0



B CC-902-40.0

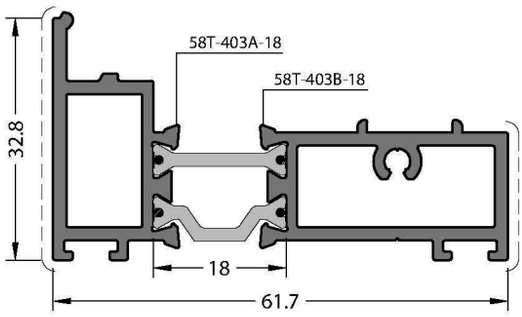

CODE / KOD

58T-403-18

THEORETICAL WEIGHT kg/m

TEORİK AĞIRLIK kg/m

1.079

ADAPTER CAP

ADAPTÖR KAPAĞI



EM58T-403

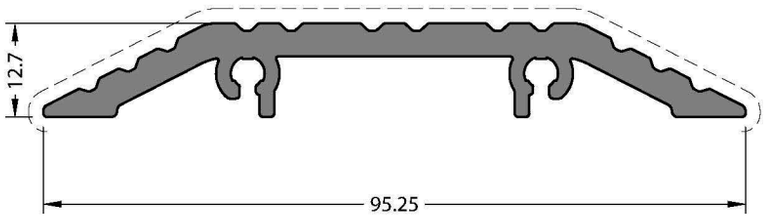

CODE / KOD

20-162-00

THEORETICAL WEIGHT kg/m

TEORİK AĞIRLIK kg/m

1.269

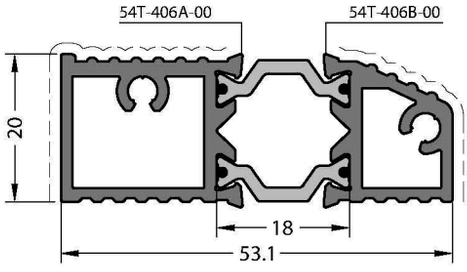

CODE / KOD

60T-406-00

THEORETICAL WEIGHT kg/m

TEORİK AĞIRLIK kg/m

0.932

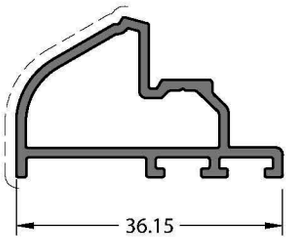

CODE / KOD

58T-405-00

THEORETICAL WEIGHT kg/m

TEORİK AĞIRLIK kg/m

0.374

DROPPER CAP

DAMLALIK KAPAĞI



EM58T-405

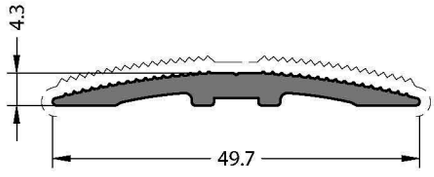

CODE / KOD

20-101-00

THEORETICAL WEIGHT kg/m

TEORİK AĞIRLIK kg/m

0.354

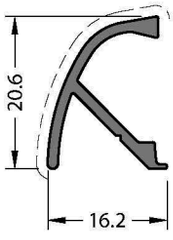

CODE / KOD

07-211-00

THEORETICAL WEIGHT kg/m

TEORİK AĞIRLIK kg/m

0.183

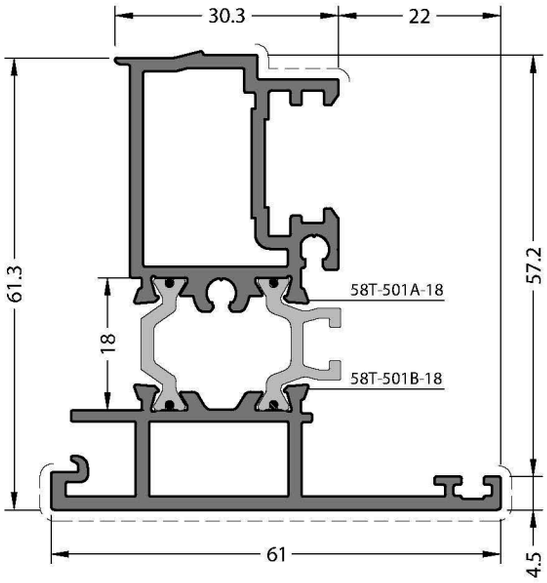

CODE / KOD

58T-501-18

THEORETICAL WEIGHT kg/m

TEORİK AĞIRLIK kg/m

1.511

ADAPTER CAP

ADAPTÖR KAPAĞI

EM58T-501

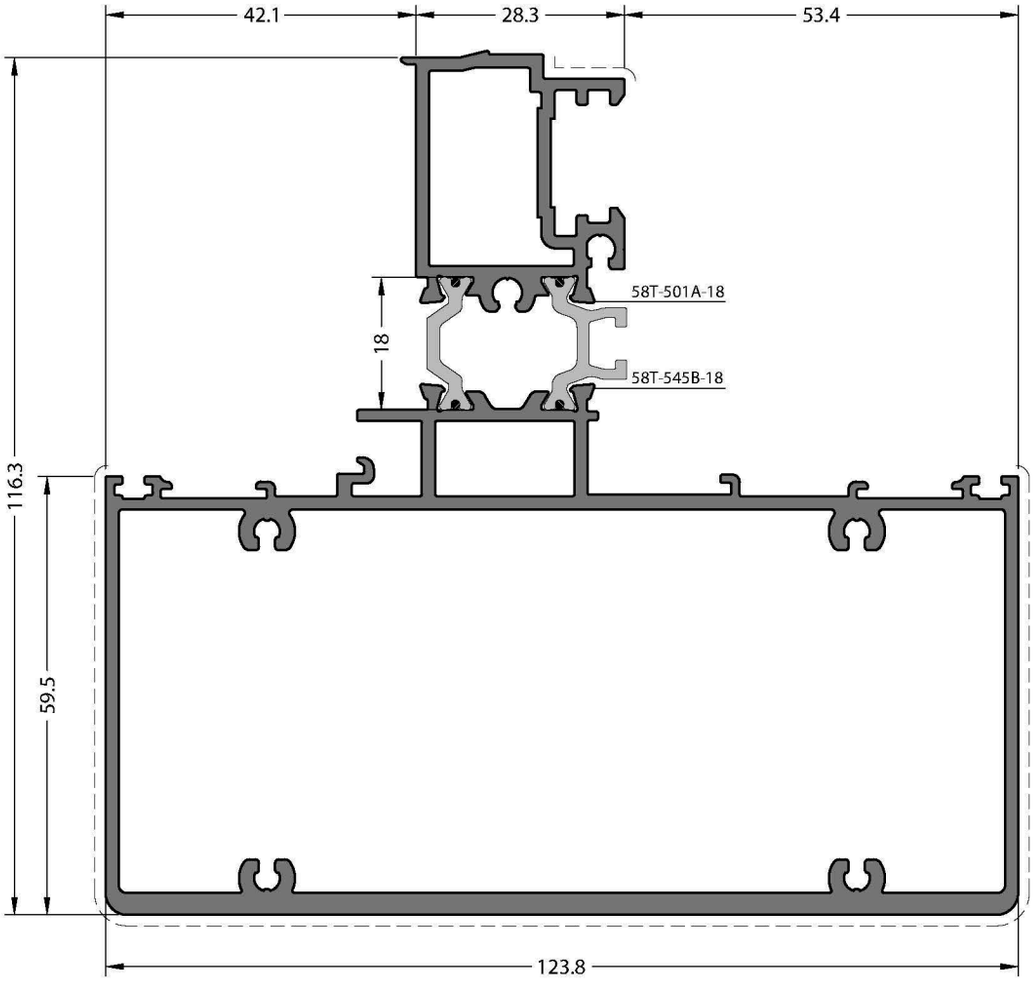

CODE / KOD

58T-545-18

THEORETICAL WEIGHT kg/m

TEORİK AĞIRLIK kg/m

1.511

ADAPTER CAP

ADAPTÖR KAPAĞI

EM58T-501

EM58T-545B

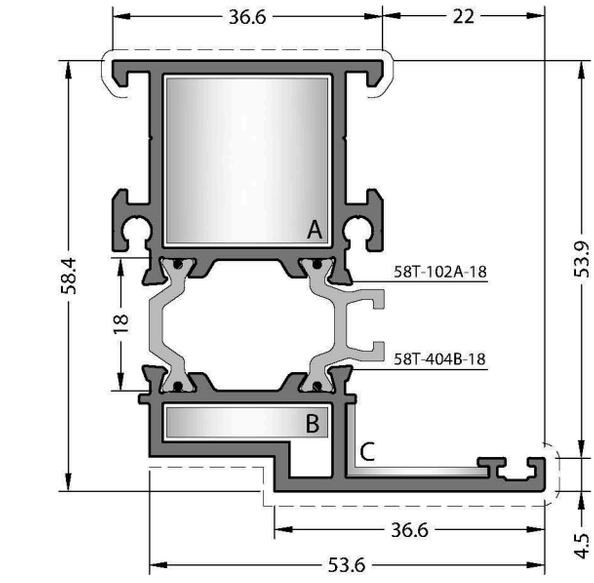

CODE / KOD

58T-404-18

THEORETICAL WEIGHT kg/m

TEORİK AĞIRLIK kg/m

1.439

CORNER JOINTS

KÖŞE BAĞLANTILAR


A CC-103-23.0


B CC-103-04.6


C EM58-21

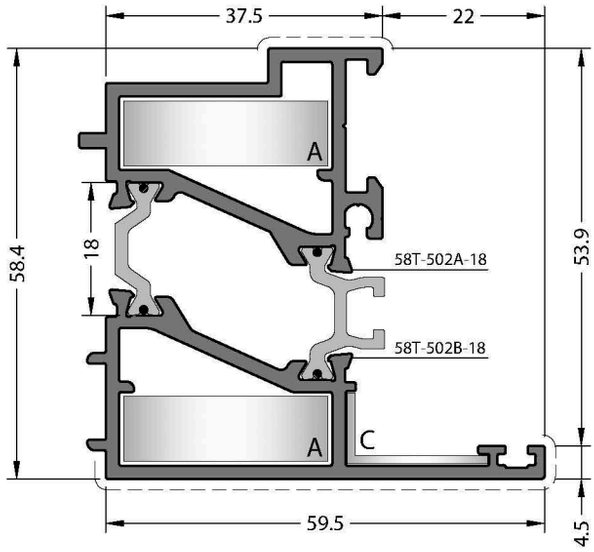

CODE / KOD

58T-502-18

THEORETICAL WEIGHT kg/m

TEORİK AĞIRLIK kg/m

1.583

CORNER JOINTS

KÖŞE BAĞLANTILAR


A CC-123-09.5


B CC-123-09.5


C EM58-21

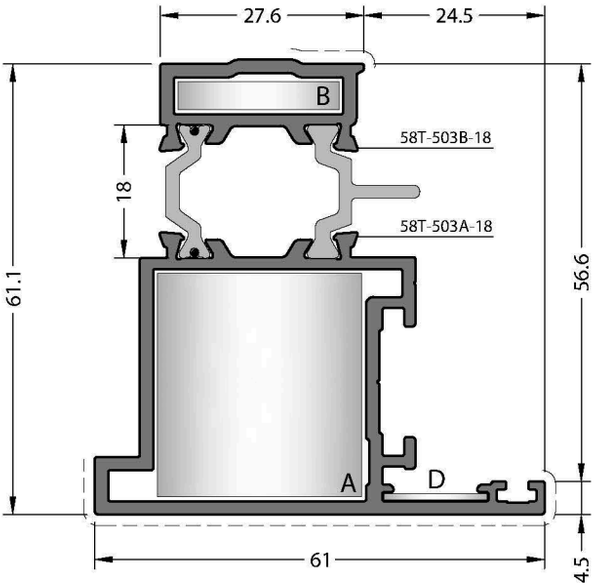

CODE / KOD

58T-503-18

THEORETICAL WEIGHT kg/m

TEORİK AĞIRLIK kg/m

1.461

CORNER JOINTS

KÖŞE BAĞLANTILAR


A CC-123-31.0


B CC-103-04.6


D MK-20.1

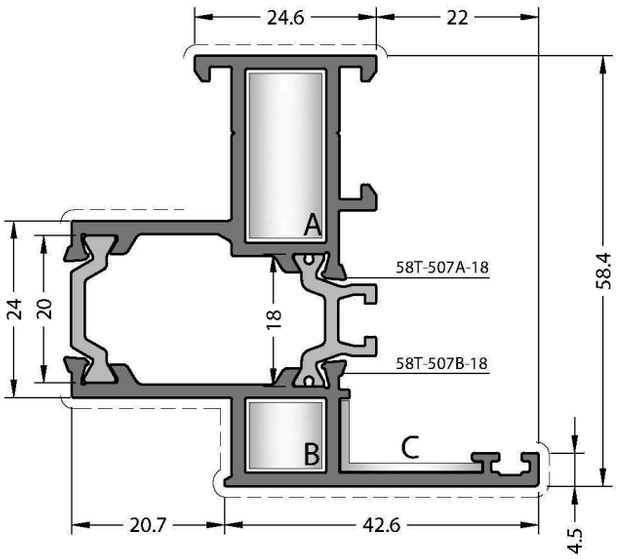

Application Details / Uygulama Detayı

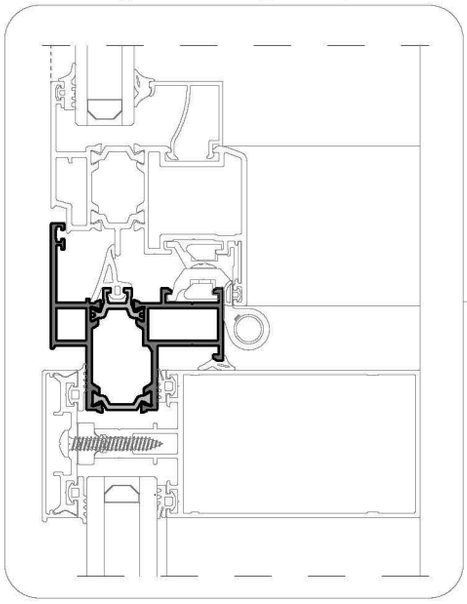

Applicable Profiles
Uygulanabilir Profiller

58T Sash Profiles
58T Kanat Profilleri

CODE / KOD

58T-507-18

THEORETICAL WEIGHT kg/m

TEORİK AĞIRLIK kg/m

1.363

CORNER JOINTS

KÖŞE BAĞLANTILAR



A CC-101-23.0



B CC-101-09.6



C EM58-21

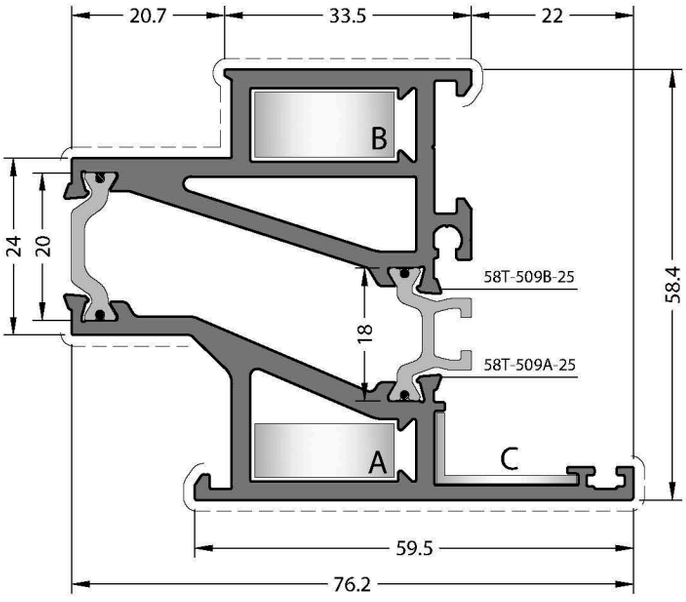

CODE / KOD

58T-509-25

THEORETICAL WEIGHT kg/m

TEORİK AĞIRLIK kg/m

2.304

CORNER JOINTS

KÖŞE BAĞLANTILAR



A CC-111-07.9



B CC-111-09.4



C EM58-21

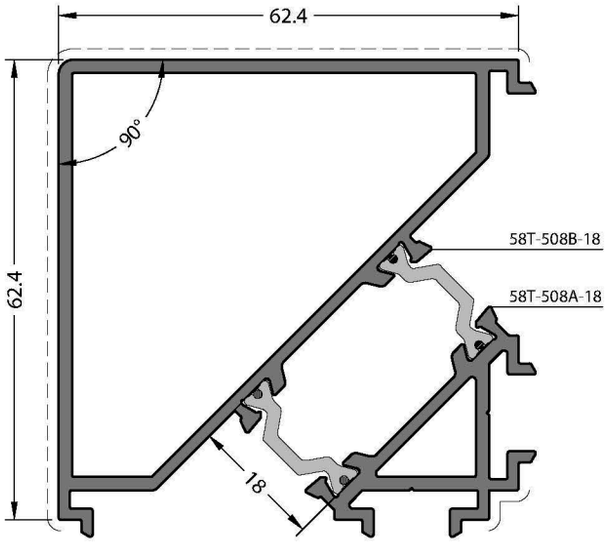

CODE / KOD
58T-508-18

THEORETICAL WEIGHT kg/m
TEORİK AĞIRLIK kg/m
1.720

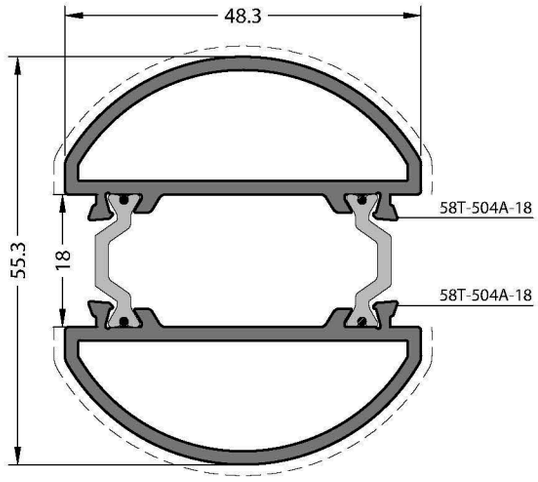

CODE / KOD
58T-504-18

THEORETICAL WEIGHT kg/m
TEORİK AĞIRLIK kg/m
1.332

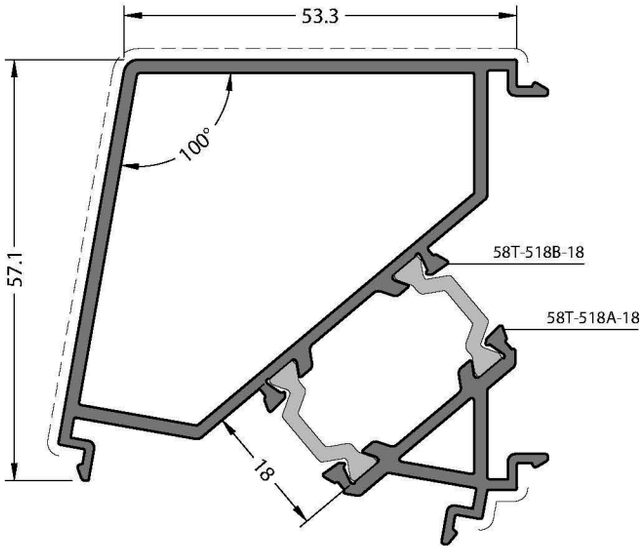

CODE / KOD
58T-518-18

THEORETICAL WEIGHT kg/m
TEORİK AĞIRLIK kg/m
1.532

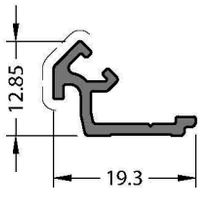

CODE / KOD
07-112-00

THEORETICAL WEIGHT kg/m
TEORİK AĞIRLIK kg/m
0.148

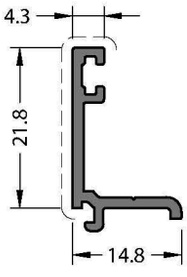

CODE / KOD
58T-511-00

THEORETICAL WEIGHT kg/m
TEORİK AĞIRLIK kg/m
0.183

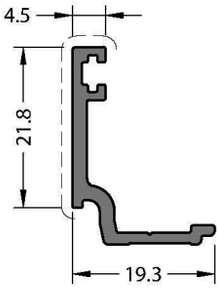

CODE / KOD
07-111-00

THEORETICAL WEIGHT kg/m
TEORİK AĞIRLIK kg/m
0.233

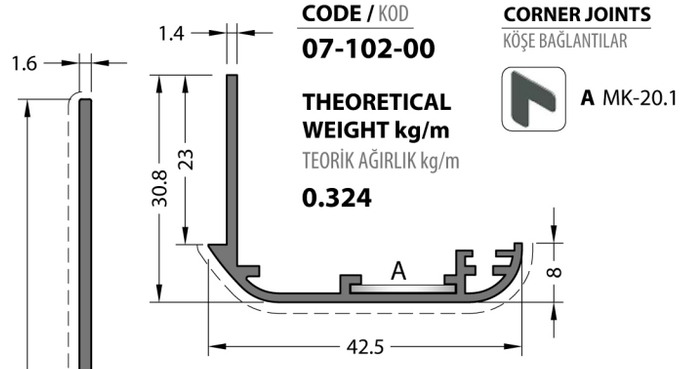

CODE / KOD
07-102-00

THEORETICAL WEIGHT kg/m
TEORİK AĞIRLIK kg/m
0.324

CORNER JOINTS
KÖŞE BAĞLANTILAR

A MK-20.1

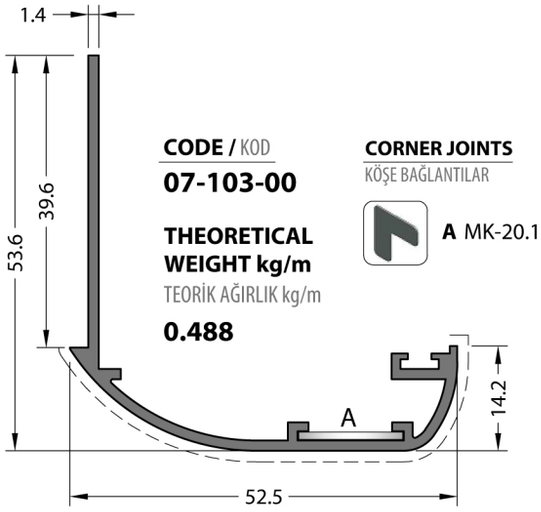

CODE / KOD
07-103-00

THEORETICAL WEIGHT kg/m
TEORİK AĞIRLIK kg/m
0.488

CORNER JOINTS
KÖŞE BAĞLANTILAR

A MK-20.1

CODE / KOD
07-105-00

THEORETICAL WEIGHT kg/m
TEORİK AĞIRLIK kg/m
0.875

CORNER JOINTS
KÖŞE BAĞLANTILAR

A LC-122

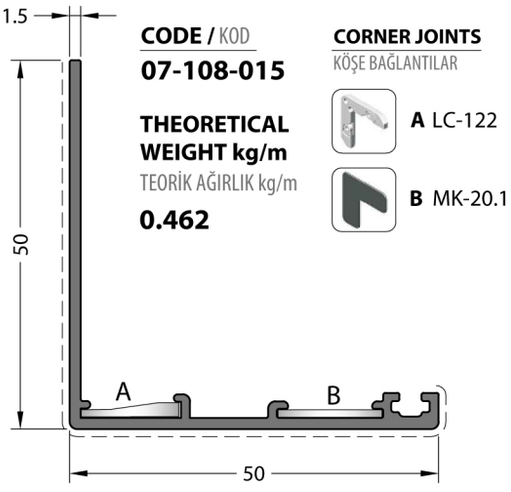

CODE / KOD
07-108-015

THEORETICAL WEIGHT kg/m
TEORİK AĞIRLIK kg/m
0.462

CORNER JOINTS
KÖŞE BAĞLANTILAR

A LC-122

B MK-20.1

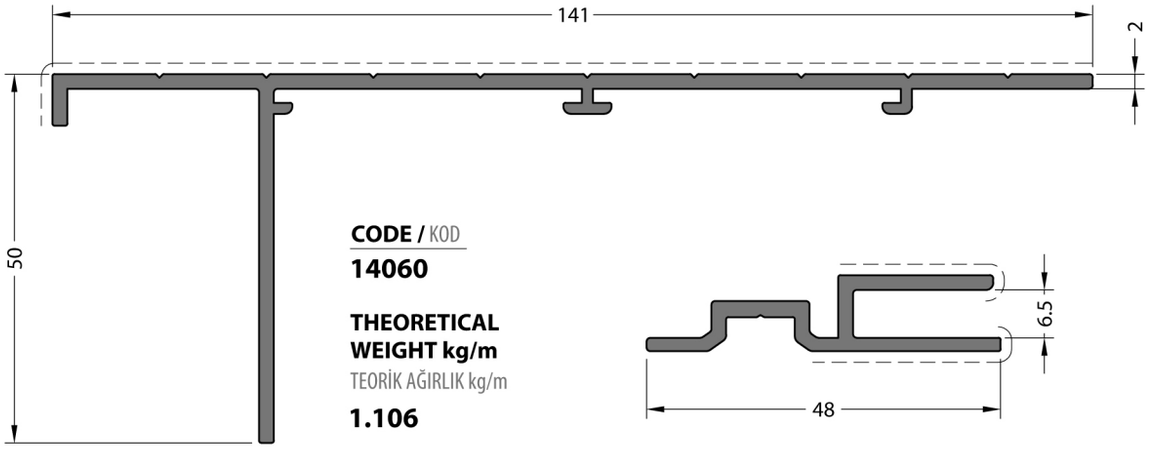

CODE / KOD
14060

THEORETICAL WEIGHT kg/m
TEORİK AĞIRLIK kg/m
1.106

CODE / KOD
14061

THEORETICAL WEIGHT kg/m
TEORİK AĞIRLIK kg/m
0.437

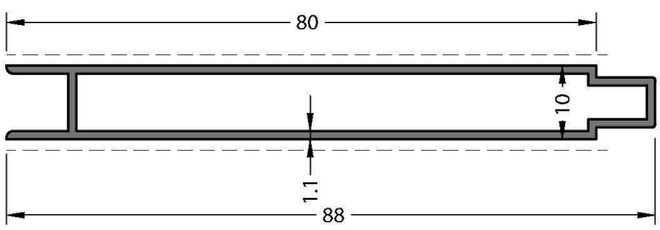

CODE / KOD
07-131-011

THEORETICAL WEIGHT kg/m
TEORİK AĞIRLIK kg/m
0.568

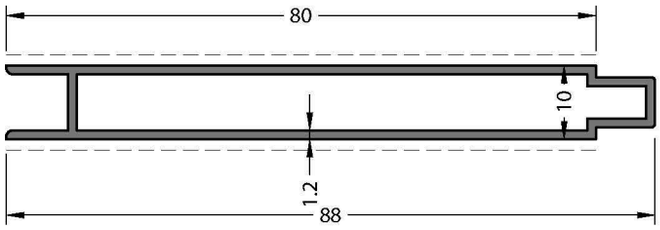

CODE / KOD
07-131-012

THEORETICAL WEIGHT kg/m
TEORİK AĞIRLIK kg/m
0.618

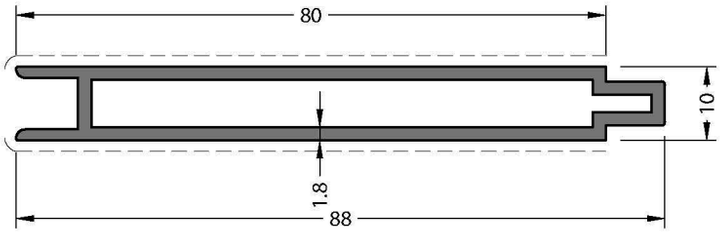

CODE / KOD
07-131-018

THEORETICAL WEIGHT kg/m
TEORİK AĞIRLIK kg/m
0.902

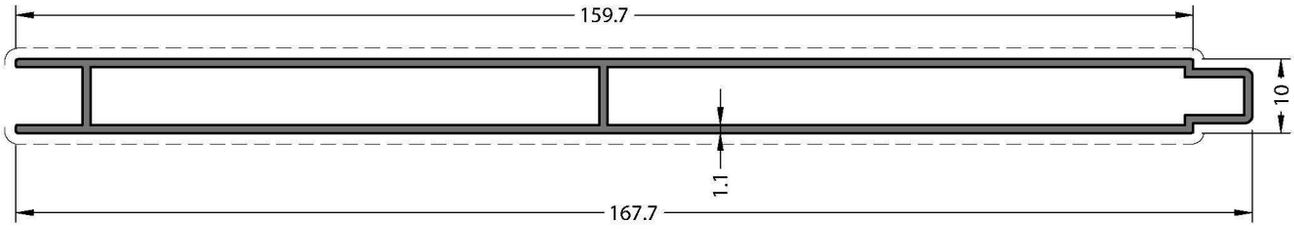

CODE / KOD
07-133-011

THEORETICAL WEIGHT kg/m
TEORİK AĞIRLIK kg/m
1.064

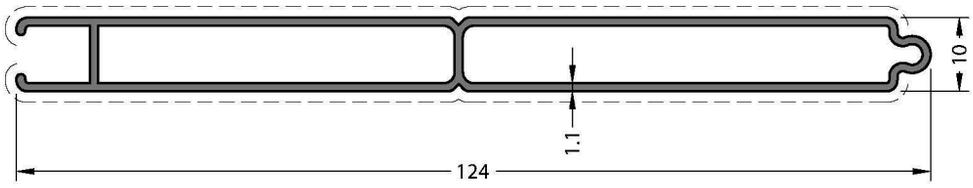

CODE / KOD
07-132-011

THEORETICAL WEIGHT kg/m
TEORİK AĞIRLIK kg/m
0.802

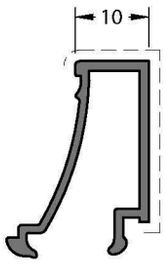

CODE / KOD
08-103-00

THEORETICAL WEIGHT kg/m
TEORİK AĞIRLIK kg/m
0.237

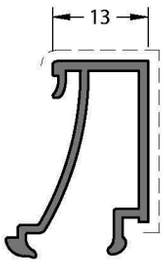

CODE / KOD
08-104-00

THEORETICAL WEIGHT kg/m
TEORİK AĞIRLIK kg/m
0.256

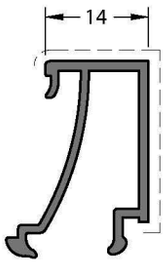

CODE / KOD
08-105-00

THEORETICAL WEIGHT kg/m
TEORİK AĞIRLIK kg/m
0.260

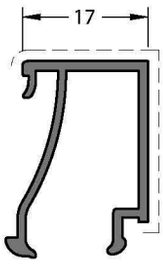

CODE / KOD
08-107-00

THEORETICAL WEIGHT kg/m
TEORİK AĞIRLIK kg/m
0.262

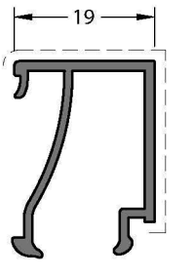

CODE / KOD
08-108-00

THEORETICAL WEIGHT kg/m
TEORİK AĞIRLIK kg/m
0.269

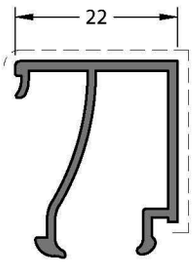

CODE / KOD
08-109-00

THEORETICAL WEIGHT kg/m
TEORİK AĞIRLIK kg/m
0.280

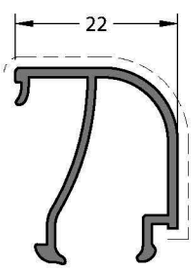

CODE / KOD
08-110-00

THEORETICAL WEIGHT kg/m
TEORİK AĞIRLIK kg/m
0.266

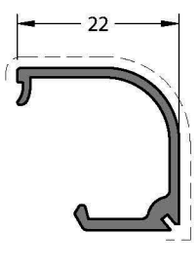

CODE / KOD
08-111-00

THEORETICAL WEIGHT kg/m
TEORİK AĞIRLIK kg/m
0.216

ADAPTER CAP
ADAPTÖR KAPAĞI



EM08-111

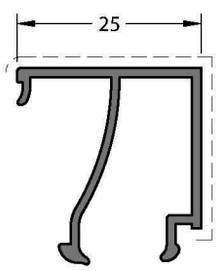

CODE / KOD
08-112-00

THEORETICAL WEIGHT kg/m
TEORİK AĞIRLIK kg/m
0.291

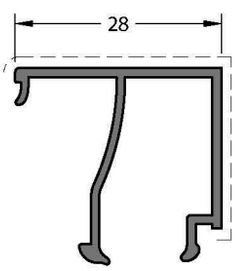

CODE / KOD
08-113-00

THEORETICAL WEIGHT kg/m
TEORİK AĞIRLIK kg/m
0.300

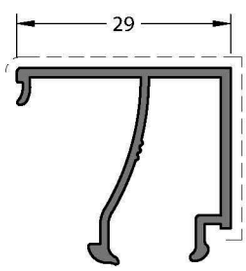

CODE / KOD
08-114-00

THEORETICAL WEIGHT kg/m
TEORİK AĞIRLIK kg/m
0.306

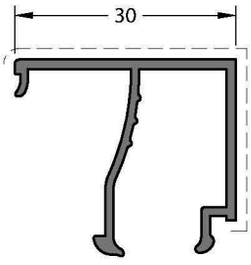

CODE / KOD
08-117-00

THEORETICAL WEIGHT kg/m
TEORİK AĞIRLIK kg/m
0.309

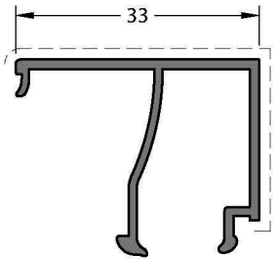

CODE / KOD
08-115-00

THEORETICAL WEIGHT kg/m
TEORİK AĞIRLIK kg/m
0.317

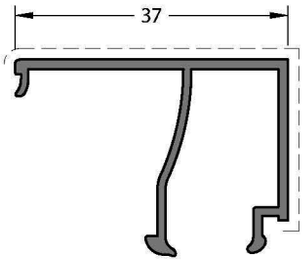

CODE / KOD
08-116-00

THEORETICAL WEIGHT kg/m
TEORİK AĞIRLIK kg/m
0.331

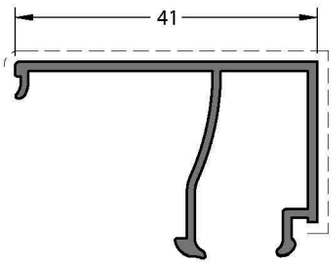

CODE / KOD
08-120-00

THEORETICAL WEIGHT kg/m
TEORİK AĞIRLIK kg/m
0.345

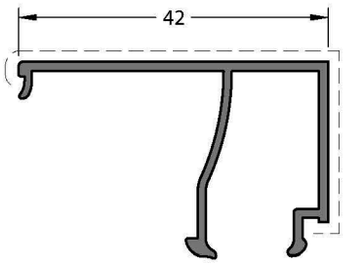

CODE / KOD
08-121-00

THEORETICAL WEIGHT kg/m
TEORİK AĞIRLIK kg/m
0.349

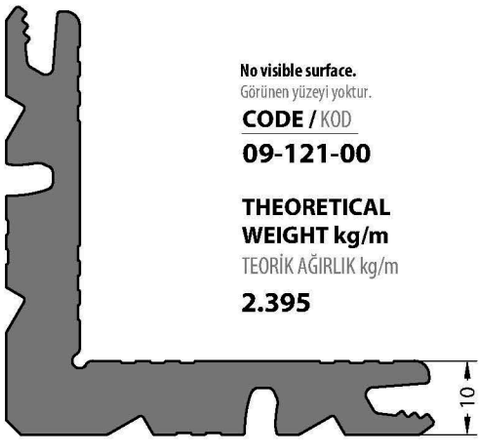

No visible surface.
Görünen yüzeyi yoktur.

CODE / KOD

09-121-00

THEORETICAL WEIGHT kg/m
TEORİK AĞIRLIK kg/m

2.395

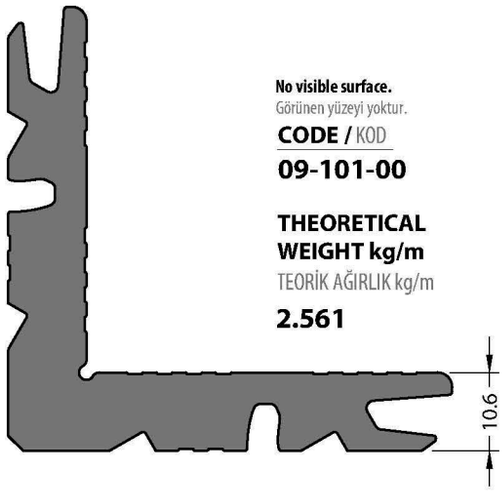

No visible surface.
Görünen yüzeyi yoktur.

CODE / KOD

09-101-00

THEORETICAL WEIGHT kg/m
TEORİK AĞIRLIK kg/m

2.561

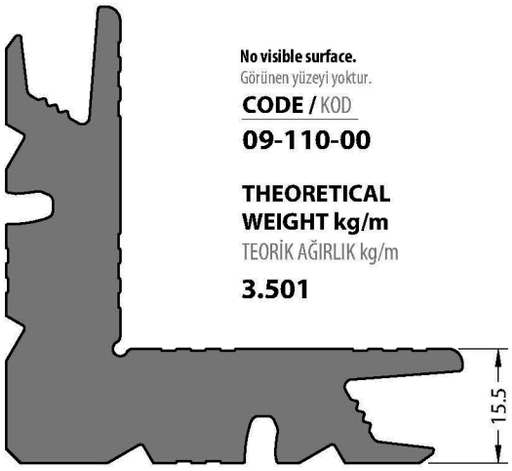

No visible surface.
Görünen yüzeyi yoktur.

CODE / KOD

09-110-00

THEORETICAL WEIGHT kg/m
TEORİK AĞIRLIK kg/m

3.501

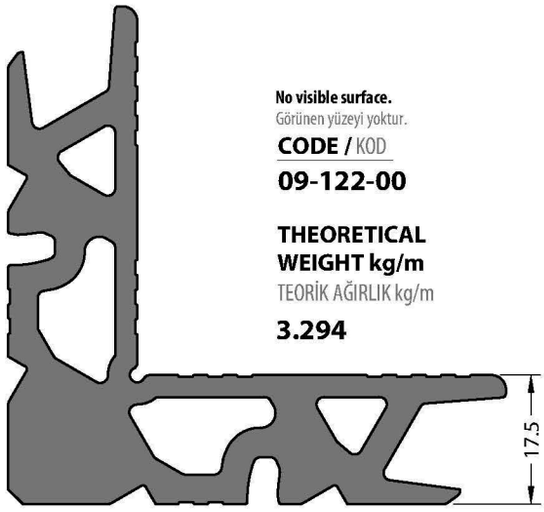

No visible surface.
Görünen yüzeyi yoktur.

CODE / KOD

09-122-00

THEORETICAL WEIGHT kg/m
TEORİK AĞIRLIK kg/m

3.294

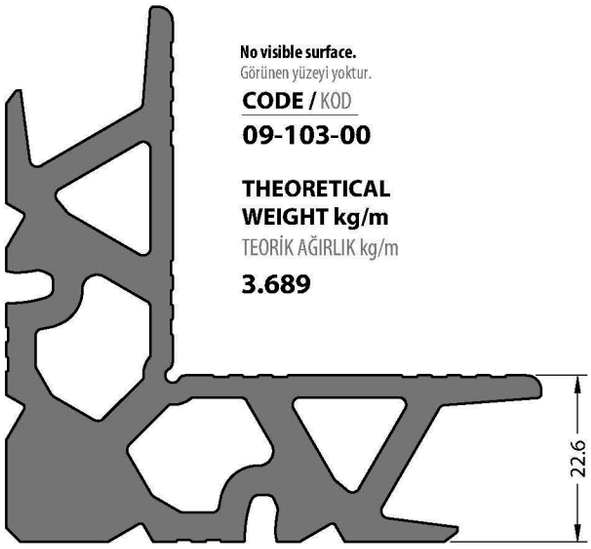

No visible surface.
Görünen yüzeyi yoktur.

CODE / KOD

09-103-00

THEORETICAL WEIGHT kg/m
TEORİK AĞIRLIK kg/m

3.689

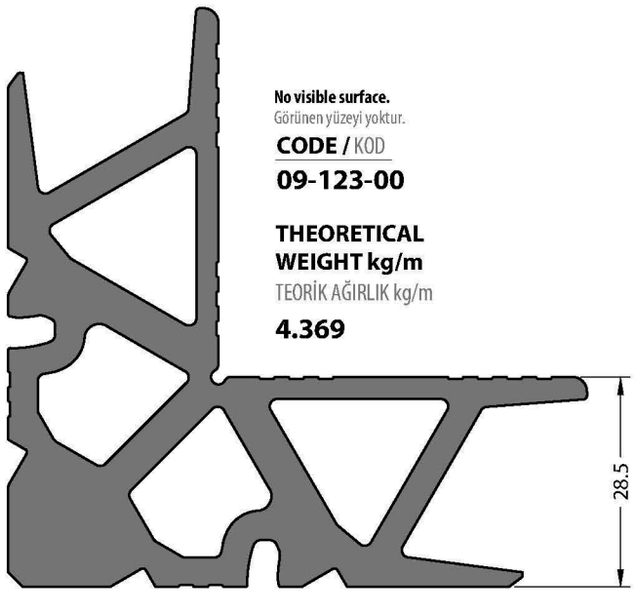

No visible surface.
Görünen yüzeyi yoktur.

CODE / KOD

09-123-00

THEORETICAL WEIGHT kg/m
TEORİK AĞIRLIK kg/m

4.369

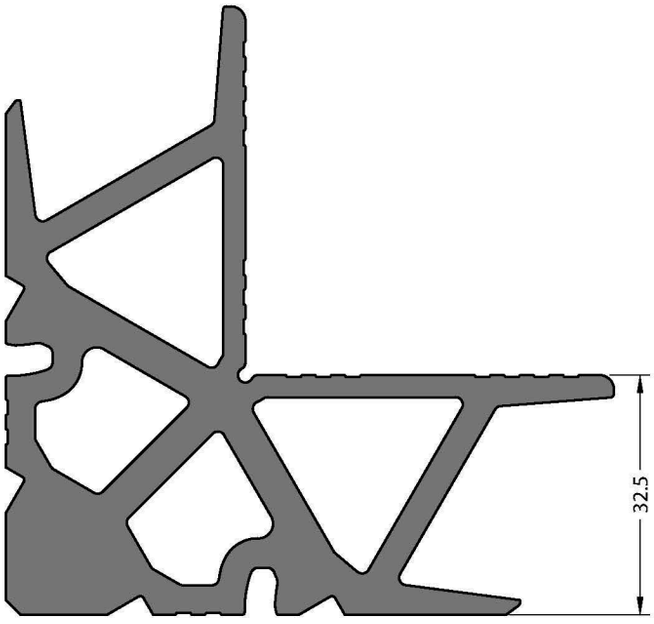

No visible surface.
Görünen yüzeyi yoktur.

CODE / KOD

09-124-00

THEORETICAL WEIGHT kg/m
TEORİK AĞIRLIK kg/m

4.572

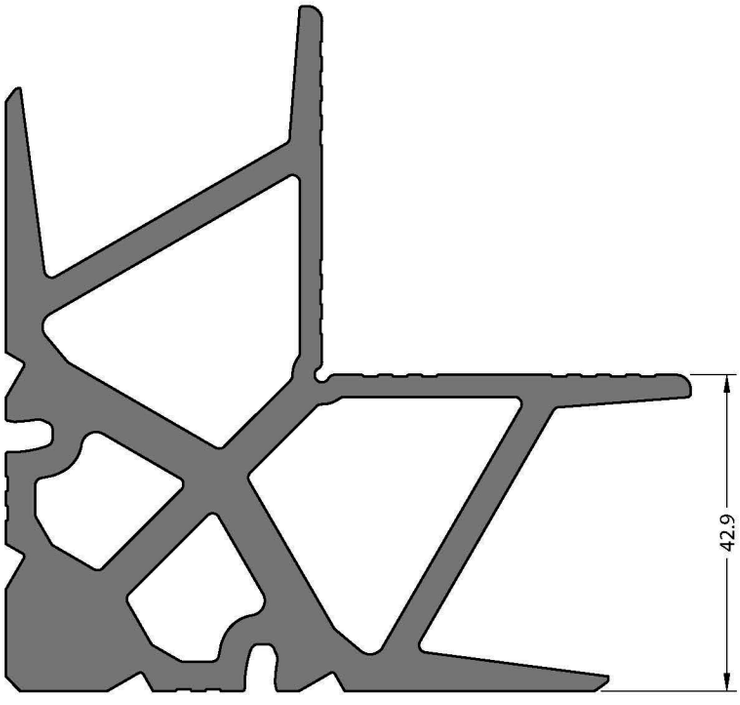

No visible surface.
Görünen yüzeyi yoktur.

CODE / KOD

09-105-00

THEORETICAL WEIGHT kg/m
TEORİK AĞIRLIK kg/m

5.453

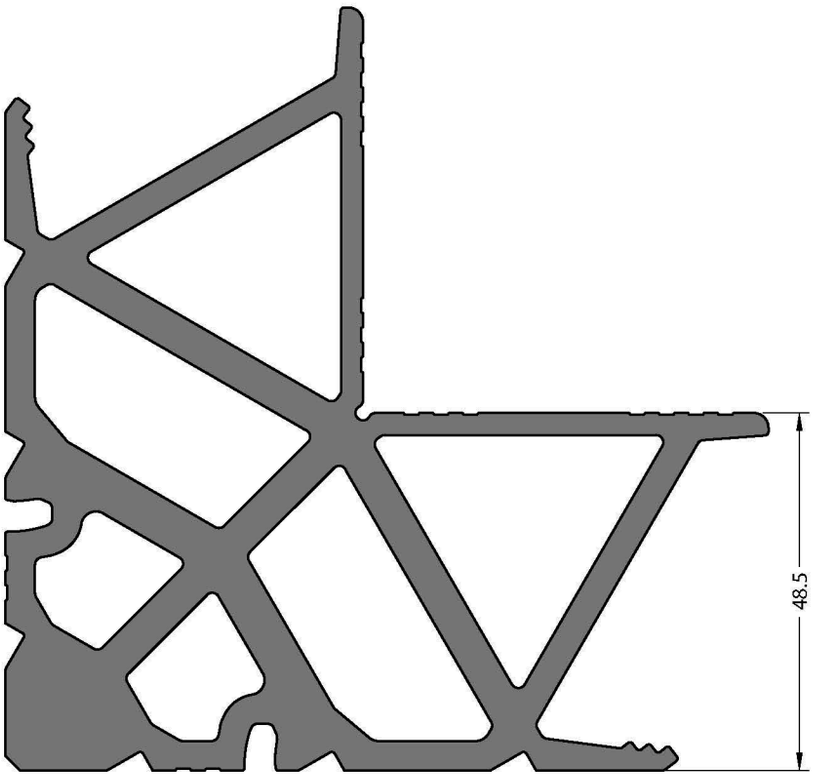

No visible surface.
Görünen yüzeyi yoktur.

CODE / KOD

09-117-00

THEORETICAL WEIGHT kg/m
TEORİK AĞIRLIK kg/m

7.012

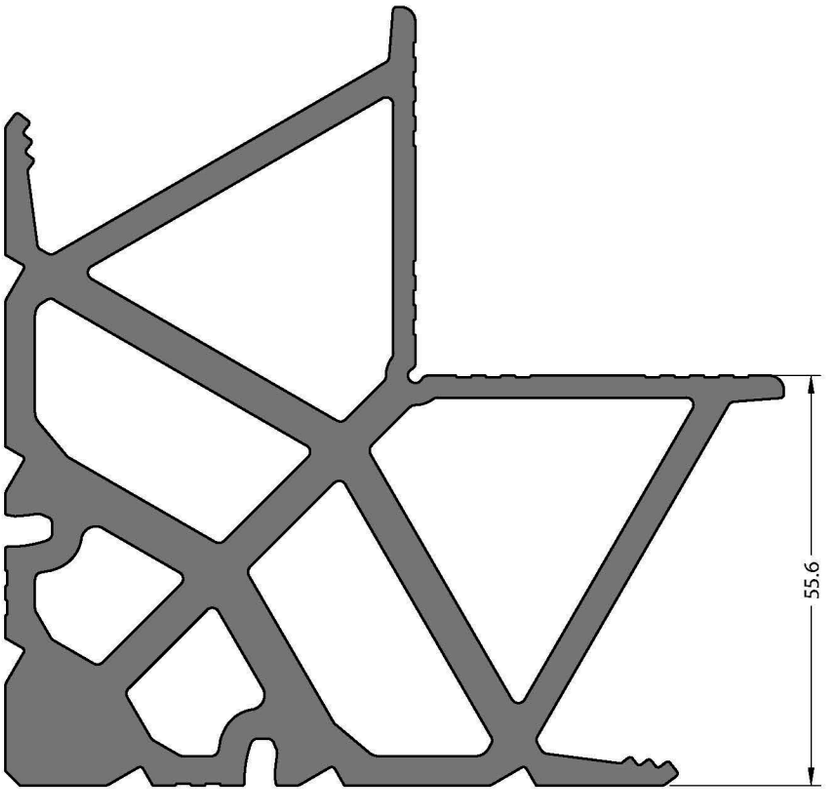

No visible surface.
Görünen yüzeyi yoktur.

CODE / KOD

09-113-00

THEORETICAL WEIGHT kg/m
TEORİK AĞIRLIK kg/m

7.241

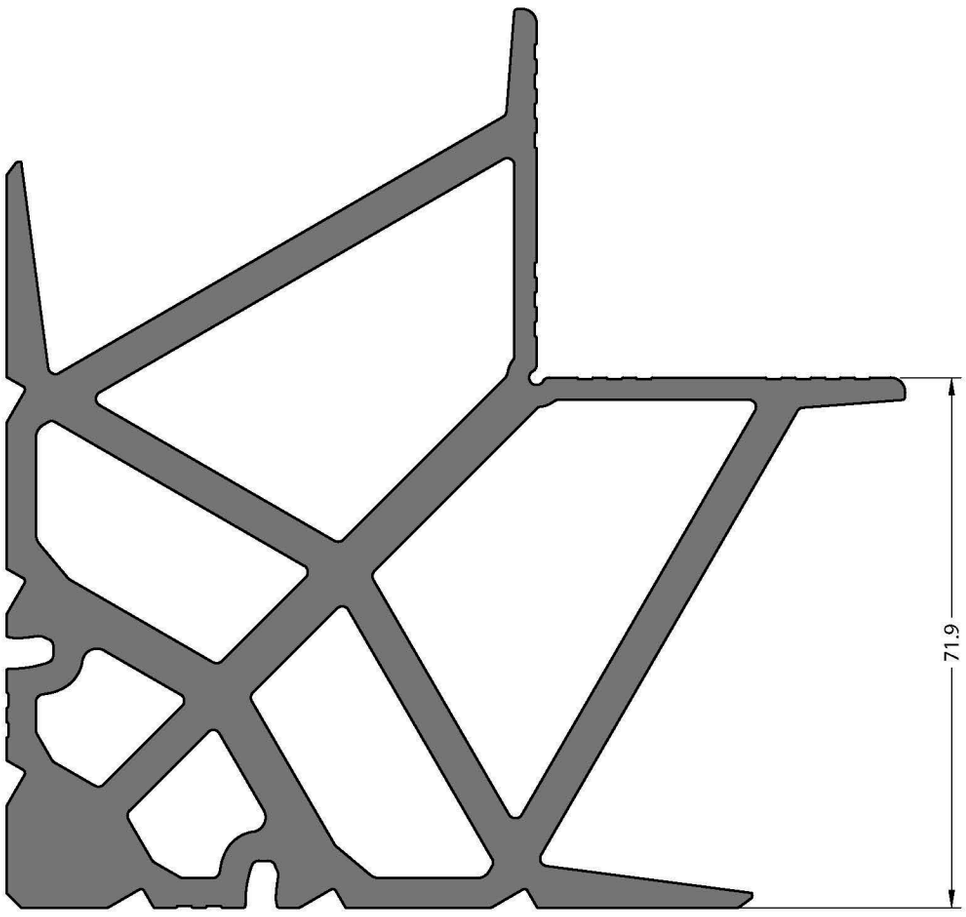

No visible surface.
Görünen yüzeyi yoktur.

CODE / KOD

09-114-00

THEORETICAL WEIGHT kg/m
TEORİK AĞIRLIK kg/m

8.744

For frame and mullion profiles.
Kasa ve orta kayıt için.

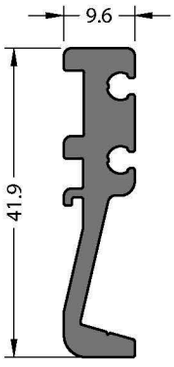

No visible surface.
Görünen yüzeyi yoktur.

CODE / KOD

09-901-00

THEORETICAL WEIGHT kg/m
TEORİK AĞIRLIK kg/m

0.582

For sash profiles.
Kanat için.

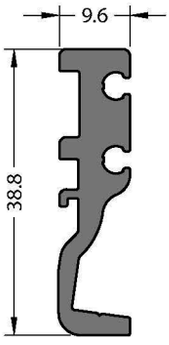

No visible surface.
Görünen yüzeyi yoktur.

CODE / KOD

09-902-00

THEORETICAL WEIGHT kg/m
TEORİK AĞIRLIK kg/m

0.552

For all profiles.
Tümü için.

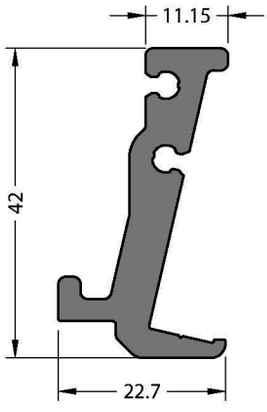

No visible surface.
Görünen yüzeyi yoktur.

CODE / KOD

09-903-00

THEORETICAL WEIGHT kg/m
TEORİK AĞIRLIK kg/m

0.856

58T

PROFILES / PROFİLLER
1.5 mm

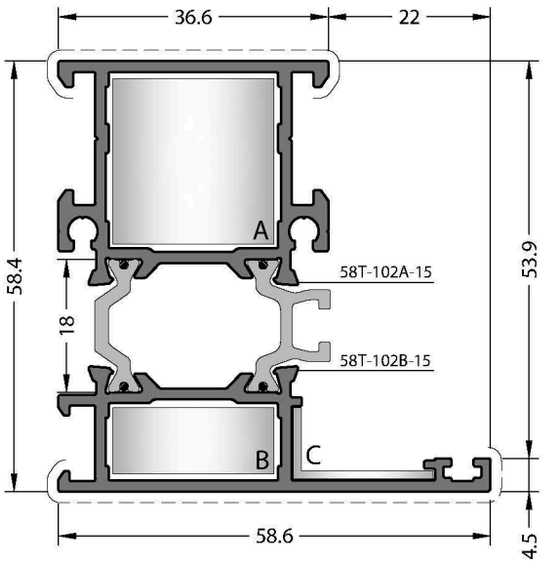

CODE / KOD

58T-102-15

THEORETICAL WEIGHT kg/m

TEORİK AĞIRLIK kg/m

1.352

CORNER JOINTS

KÖŞE BAĞLANTILAR


A CC-103-23.4


B CC-103-10.0


C EM58-21

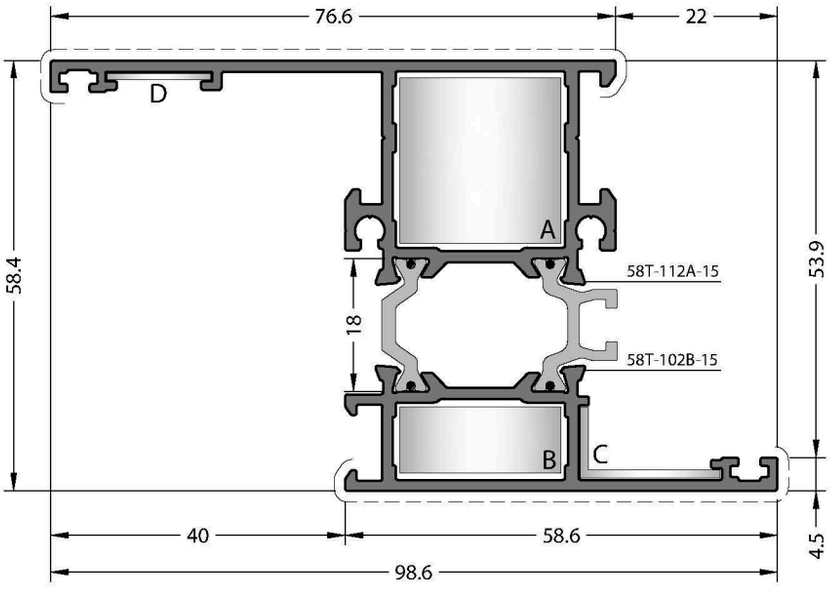

CODE / KOD

58T-112-15

THEORETICAL WEIGHT kg/m

TEORİK AĞIRLIK kg/m

1.557

CORNER JOINTS

KÖŞE BAĞLANTILAR


A CC-103-23.4


B CC-103-10.0


C EM58-21


D MK-20.1

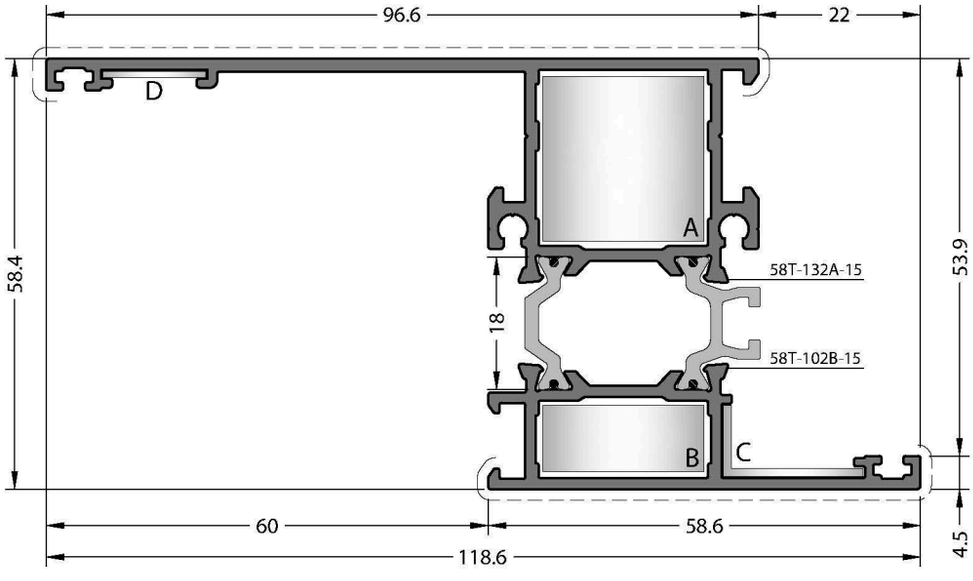

CODE / KOD

58T-132-15

THEORETICAL WEIGHT kg/m

TEORİK AĞIRLIK kg/m

1.661

CORNER JOINTS

KÖŞE BAĞLANTILAR


A CC-103-23.4


B CC-103-10.0


C EM58-21


D MK-20.1

Just use for doors. / Sadece kapı için kullanılır.

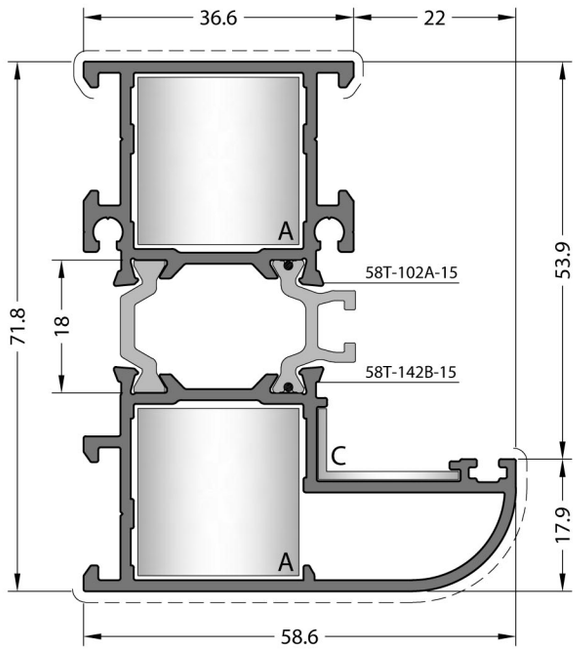

CODE / KOD

58T-142-15

THEORETICAL WEIGHT kg/m
TEORİK AĞIRLIK kg/m

1.565

CORNER JOINTS
KÖŞE BAĞLANTILAR


A CC-103-23.4


C EM58-21

JUST FOR FRAME USE ONLY !
SADECE KASA KULLANIMI İÇİNDİR !

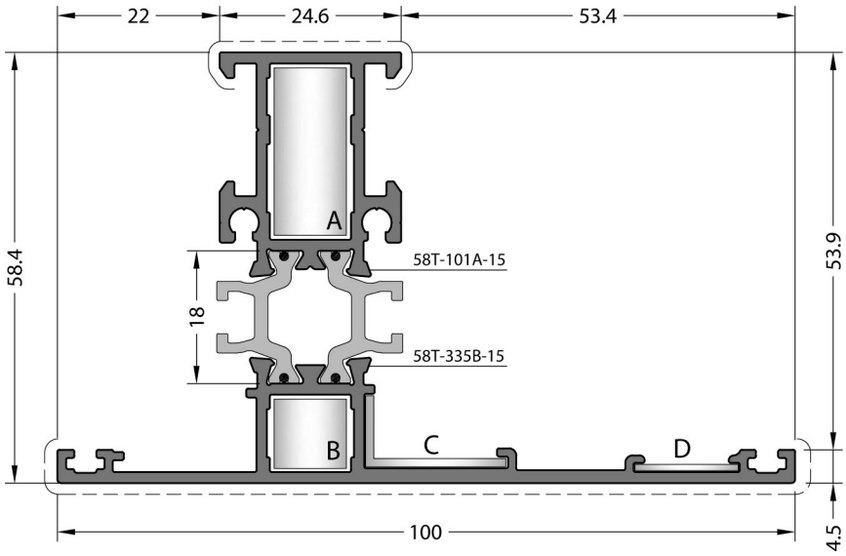

CODE / KOD

58T-335-15

THEORETICAL WEIGHT kg/m
TEORİK AĞIRLIK kg/m

1.450

CORNER JOINTS
KÖŞE BAĞLANTILAR


A CC-101-23.4


B CC-101-10.0


C EM58-21


D MK-20.1

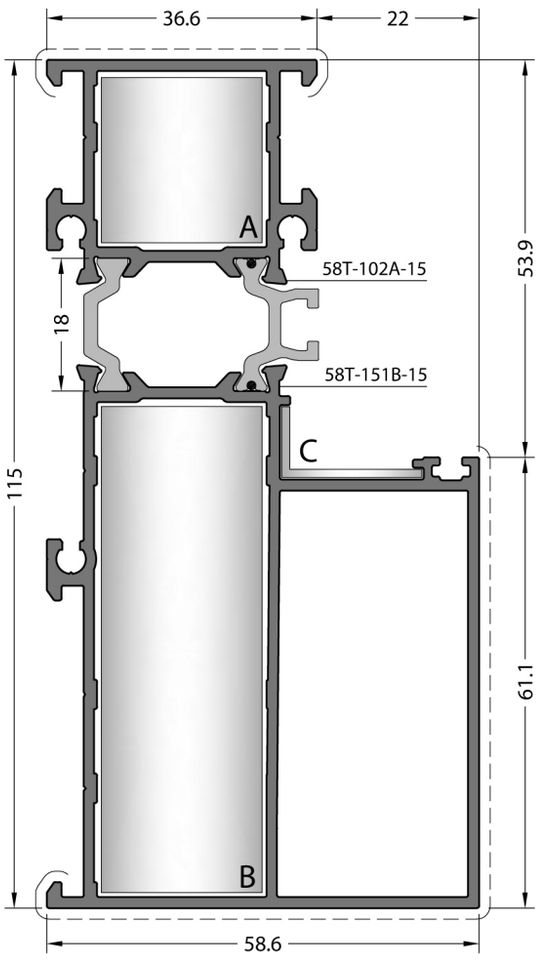

CODE / KOD

58T-151-15

THEORETICAL WEIGHT kg/m

TEORİK AĞIRLIK kg/m

2.168

CORNER JOINTS

KÖŞE BAĞLANTILAR



A CC-103-23.4



B CC-103-66.6



C EM58-21

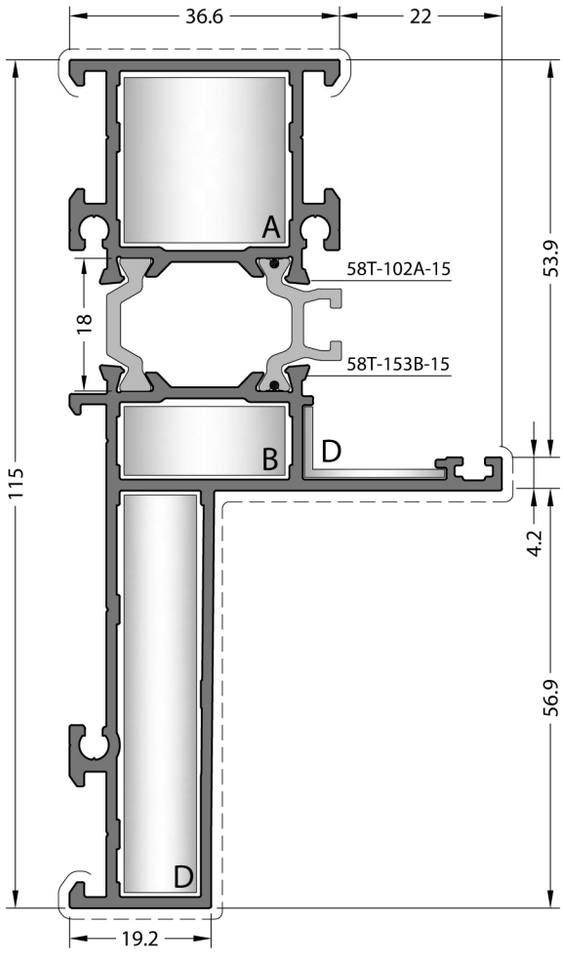

CODE / KOD

58T-153-15

THEORETICAL WEIGHT kg/m

TEORİK AĞIRLIK kg/m

1.905

CORNER JOINTS

KÖŞE BAĞLANTILAR



A CC-103-23.4



B CC-103-10.0



C CC-101-54.5



D EM58-21

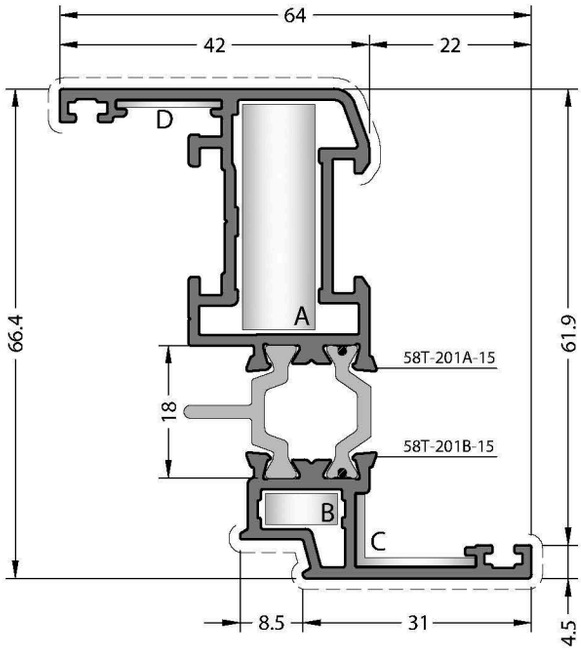

CODE / KOD

58T-201-15

THEORETICAL WEIGHT kg/m

TEORİK AĞIRLIK kg/m

1.285

CORNER JOINTS

KÖŞE BAĞLANTILAR


A CC-101-31.3


B CC-101-04.9


C EM58-22


D MK-20.1

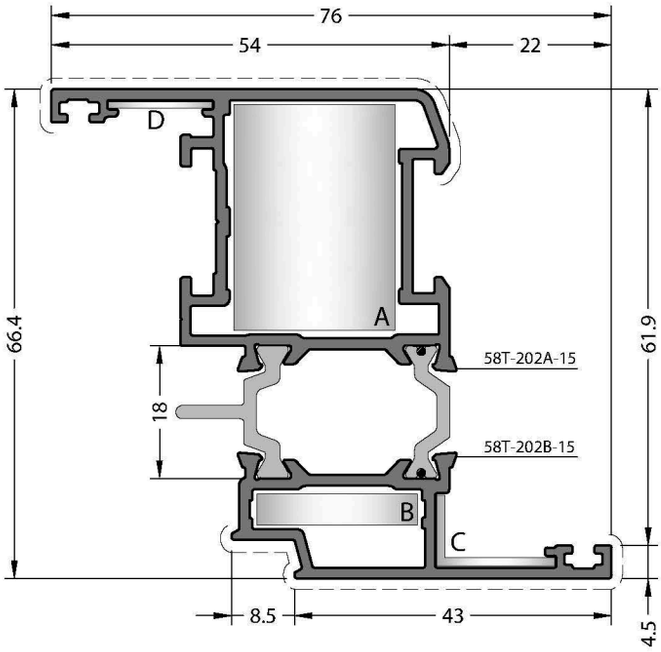

CODE / KOD

58T-202-15

THEORETICAL WEIGHT kg/m

TEORİK AĞIRLIK kg/m

1.477

CORNER JOINTS

KÖŞE BAĞLANTILAR


A CC-103-31.3


B CC-103-04.9


C EM58-22


D MK-20.1

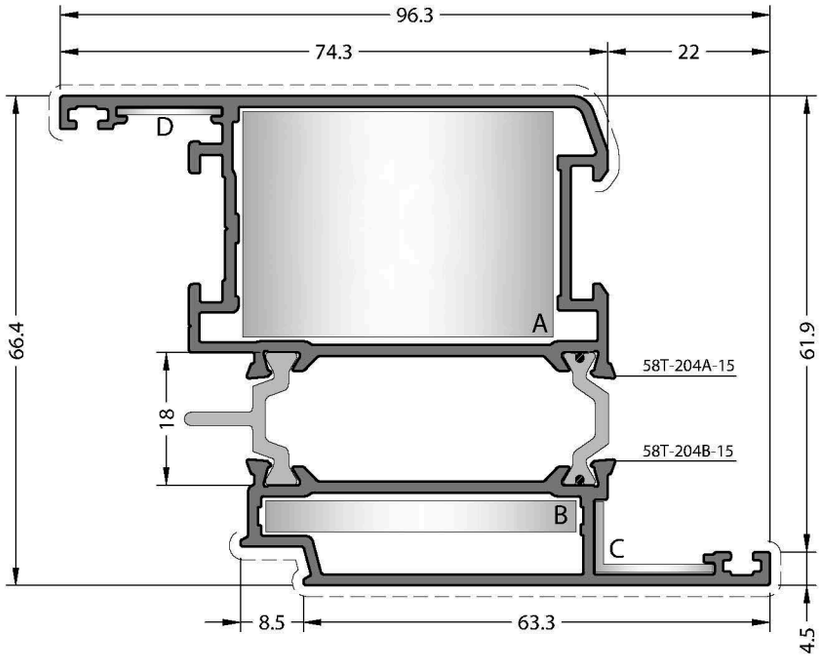

CODE / KOD

58T-204-15

THEORETICAL WEIGHT kg/m

TEORİK AĞIRLIK kg/m

1.806

CORNER JOINTS

KÖŞE BAĞLANTILAR



A CC-105-31.3



B CC-105-04.9



C EM58-22



D MK-20.1

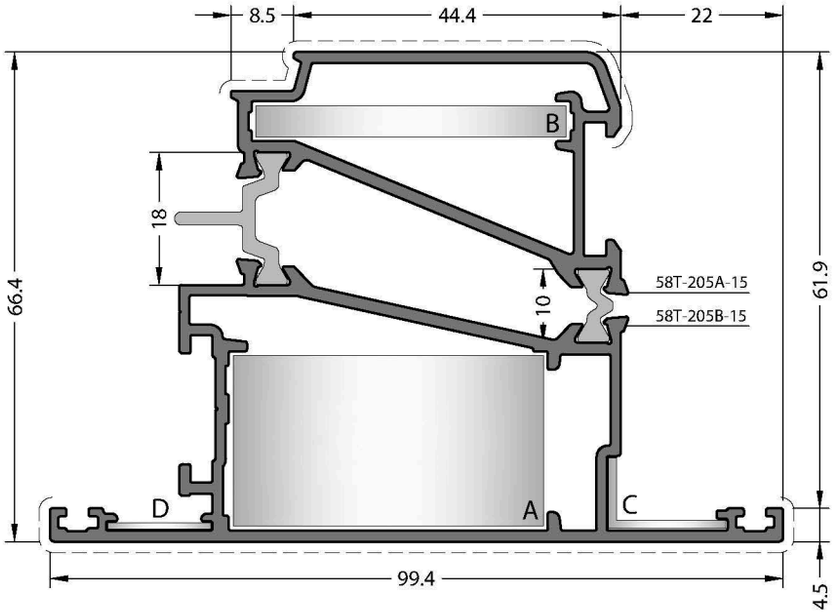

CODE / KOD

58T-205-15

THEORETICAL WEIGHT kg/m

TEORİK AĞIRLIK kg/m

1.963

CORNER JOINTS

KÖŞE BAĞLANTILAR



A CC-105-23.8



B CC-105-04.9



C EM58-22



D MK-20.1

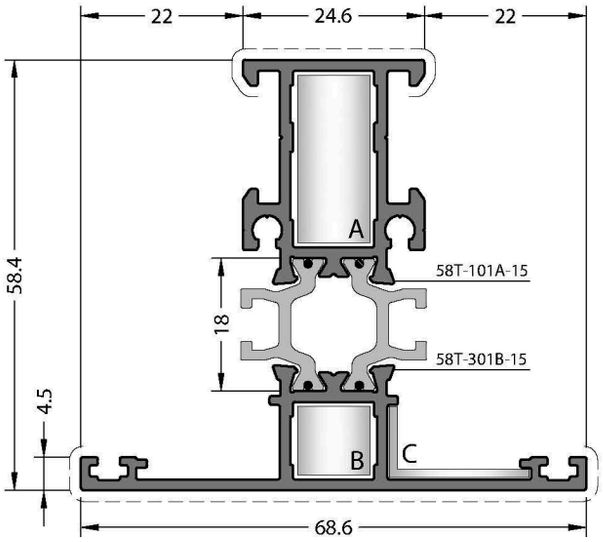

CODE / KOD

58T-301-15

THEORETICAL WEIGHT kg/m

TEORİK AĞIRLIK kg/m

1.262

T JUNCTION
ÇEKTİRME BAĞLANTI


A CC-903-10.5

FOR FRAME / *KASA İÇİN*


B CC-901-10.5

FOR SASH / *KANAT İÇİN*


B CC-902-10.5

CORNER JOINTS
KÖŞE BAĞLANTILAR


A CC-101-23.4


B CC-101-10.0


C EM58-21

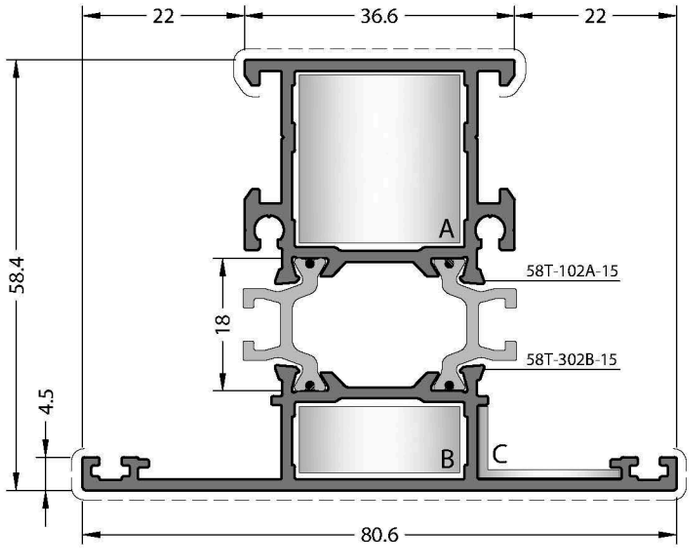

CODE / KOD

58T-302-15

THEORETICAL WEIGHT kg/m

TEORİK AĞIRLIK kg/m

1.470

T JUNCTION
ÇEKTİRME BAĞLANTI


A CC-903-22.5

FOR FRAME / *KASA İÇİN*


B CC-901-22.5

FOR SASH / *KANAT İÇİN*


B CC-902-22.5

CORNER JOINTS
KÖŞE BAĞLANTILAR


A CC-103-23.4


B CC-103-10.0


C EM58-21

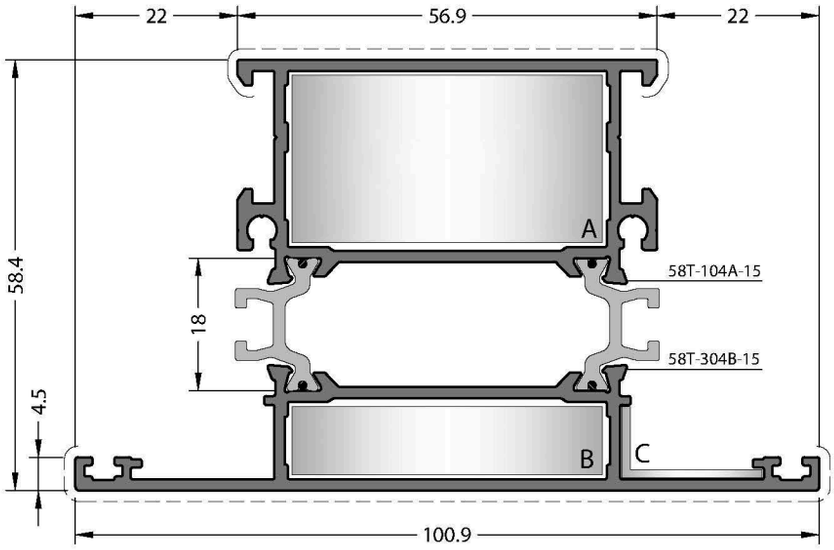

CODE / KOD

58T-304-15

THEORETICAL WEIGHT kg/m

TEORİK AĞIRLIK kg/m

1.800

T JUNCTION
ÇEKTİRME BAĞLANTI


A CC-903-42.8

FOR FRAME / *KASA İÇİN*


B CC-901-42.8

FOR SASH / *KANAT İÇİN*


B CC-902-42.8

CORNER JOINTS
KÖŞE BAĞLANTILAR


A CC-105-23.4


B CC-105-10.0


C EM58-21

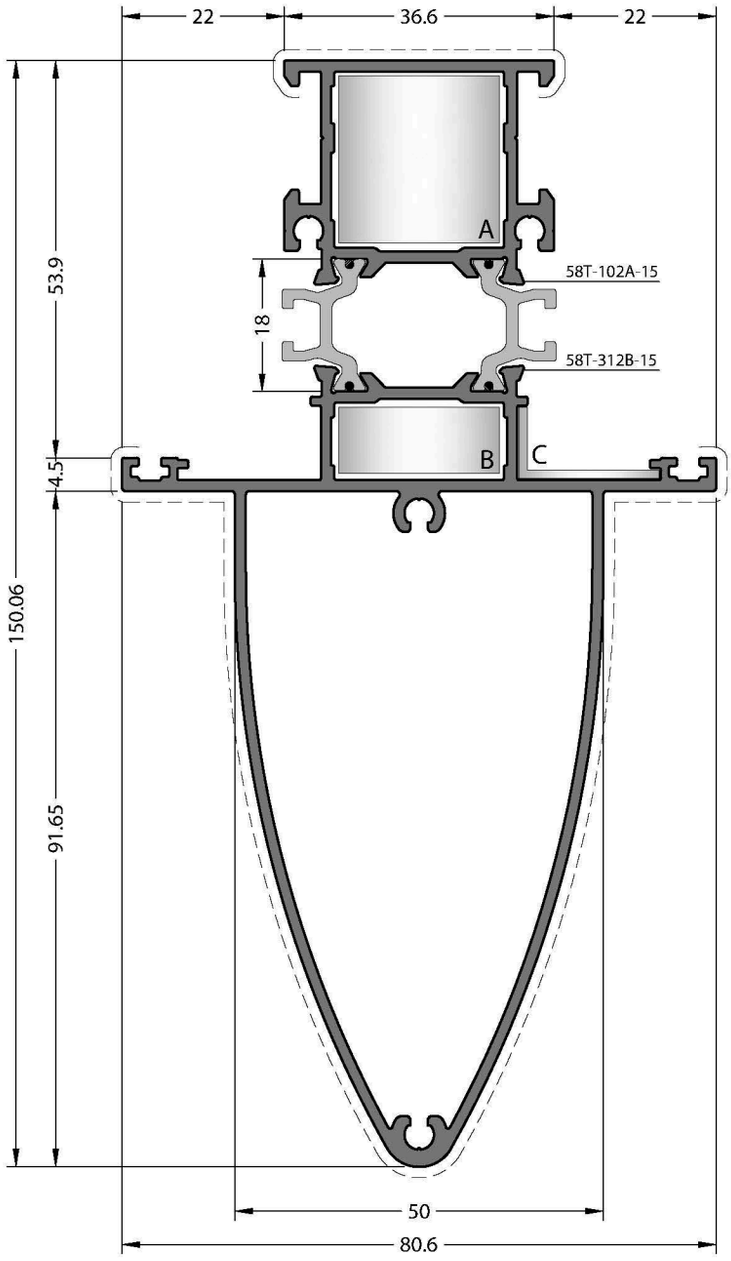

CODE / KOD

58T-312-15

THEORETICAL WEIGHT kg/m

TEORİK AĞIRLIK kg/m

2.360

T JUNCTION

ÇEKTİRME BAĞLANTI

A CC-903-22.5

FOR FRAME / *KASA İÇİN*

B CC-901-22.5

FOR SASH / *KANAT İÇİN*

B CC-902-22.5

CORNER JOINTS

KÖŞE BAĞLANTILAR

A CC-103-23.4

B CC-103-10.0

C EM58-21

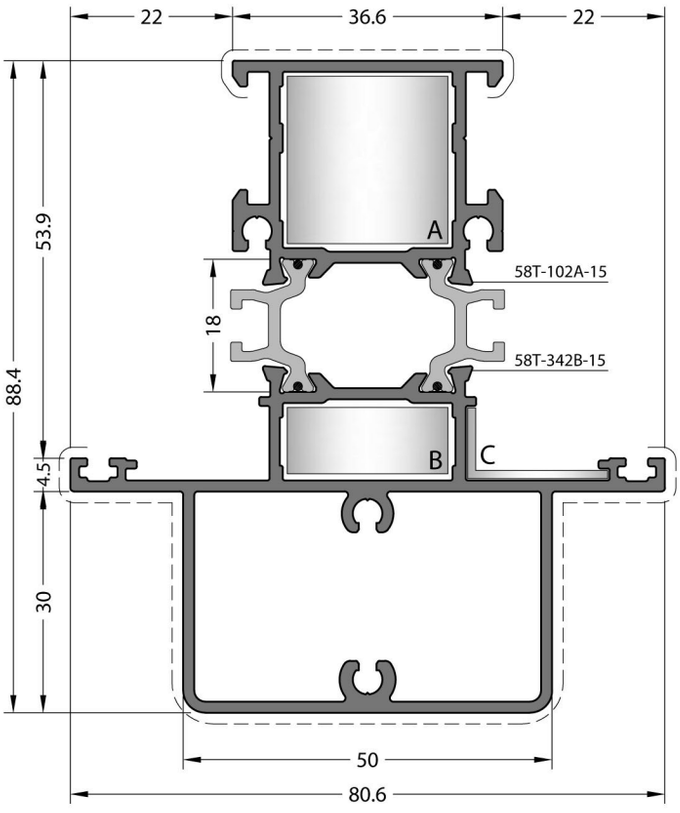

CODE / KOD

58T-342-15

THEORETICAL WEIGHT kg/m

TEORİK AĞIRLIK kg/m

2.017

T JUNCTION

ÇEKTİRME BAĞLANTI



A CC-903-22.5

FOR FRAME / *KASA İÇİN*



B CC-901-22.5

FOR SASH / *KANAT İÇİN*



B CC-902-22.5

CORNER JOINTS

KÖŞE BAĞLANTILAR



A CC-103-23.4



B CC-103-10.0



C EM58-21

58T

PROFILES / PROFİLLER
2 mm

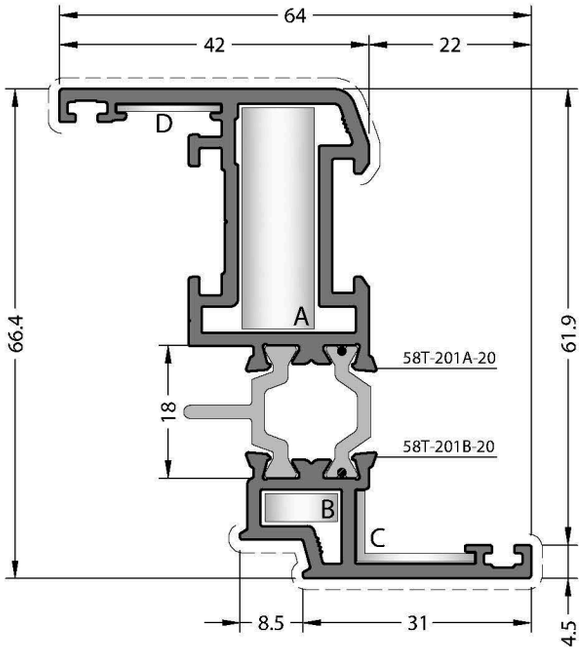

CODE / KOD

58T-201-20

THEORETICAL WEIGHT kg/m

TEORİK AĞIRLIK kg/m

1.461

CORNER JOINTS

KÖŞE BAĞLANTILAR



A CC-101-30.8



B CC-101-04.6



C EM58-22



D MK-20.1

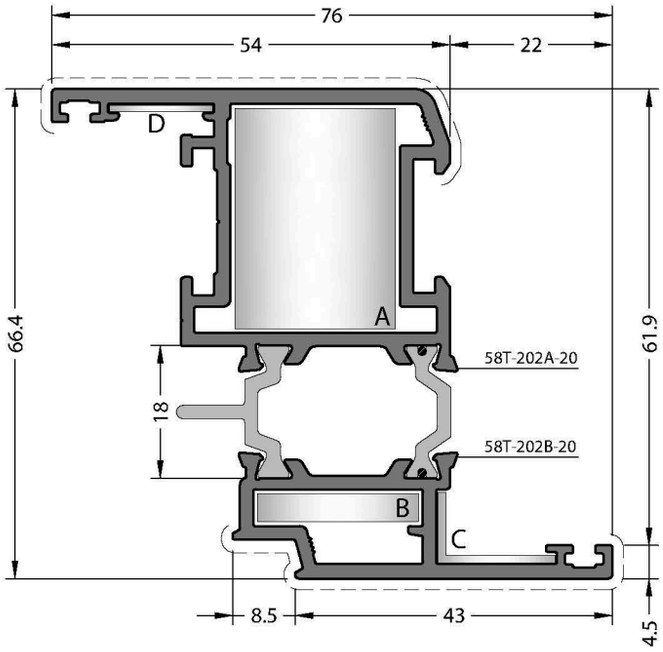

CODE / KOD

58T-202-20

THEORETICAL WEIGHT kg/m

TEORİK AĞIRLIK kg/m

1.722

CORNER JOINTS

KÖŞE BAĞLANTILAR



A CC-103-30.8



B CC-103-04.6



C EM58-22



D MK-20.1

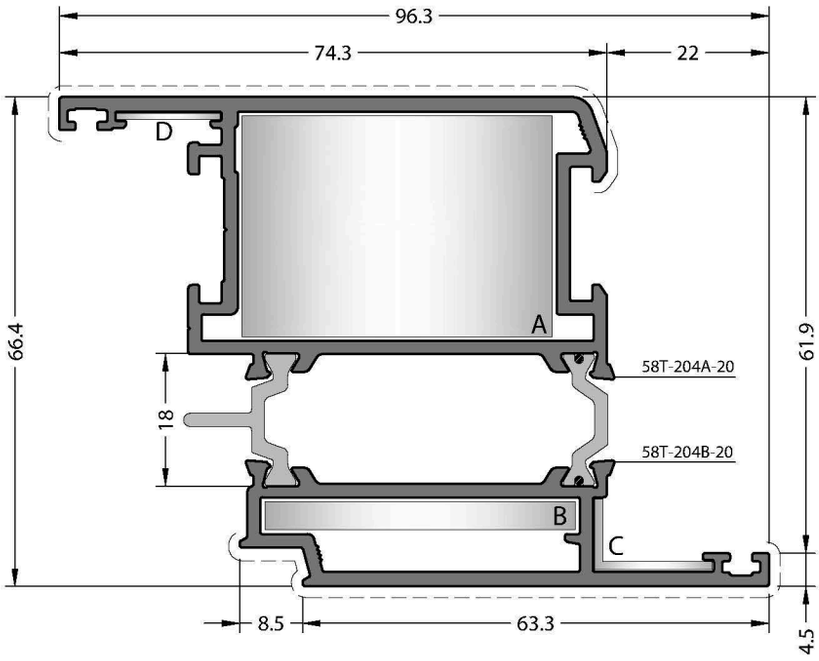

CODE / KOD

58T-204-20

THEORETICAL WEIGHT kg/m

TEORİK AĞIRLIK kg/m

2.138

CORNER JOINTS

KÖŞE BAĞLANTILAR


A CC-105-30.8


B CC-105-04.6


C EM58-22


D MK-20.1

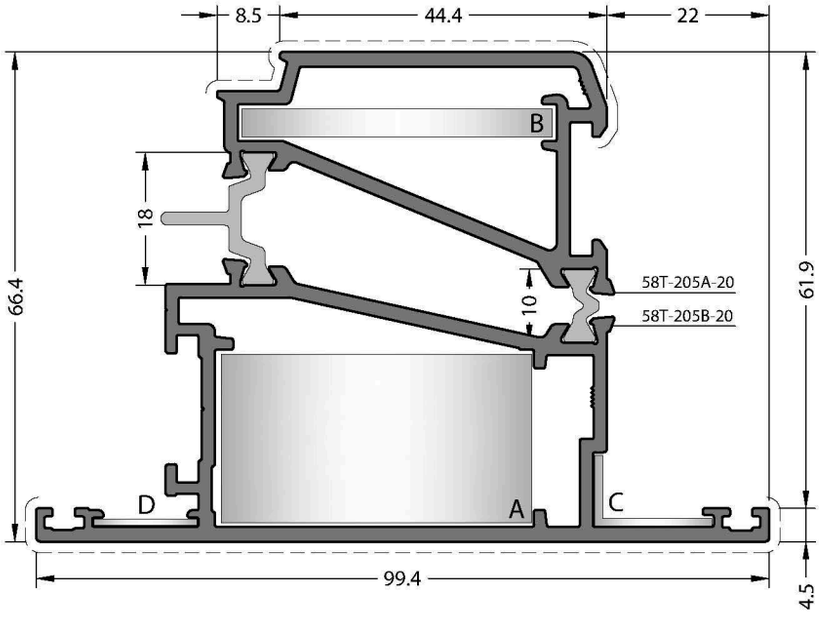

CODE / KOD

58T-205-20

THEORETICAL WEIGHT kg/m

TEORİK AĞIRLIK kg/m

2.308

CORNER JOINTS

KÖŞE BAĞLANTILAR


A CC-105-23.6


B CC-105-04.6


C EM58-22


D MK-20.1

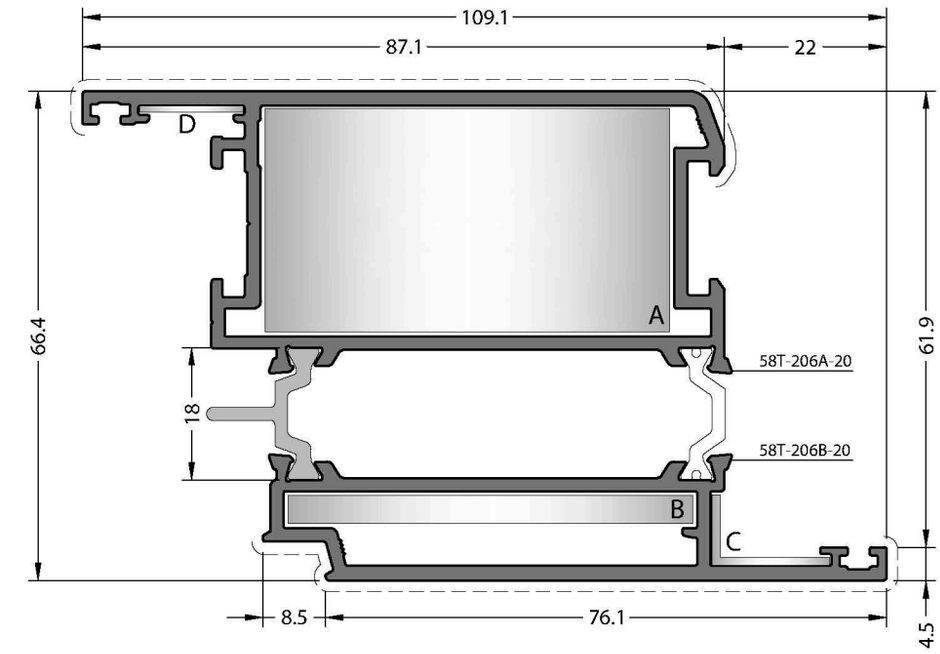

CODE / KOD

58T-206-20

THEORETICAL WEIGHT kg/m

TEORİK AĞIRLIK kg/m

2.388

CORNER JOINTS

KÖŞE BAĞLANTILAR



A CC-113-30.8



B CC-113-04.5



C EM58-22



D MK-20.1

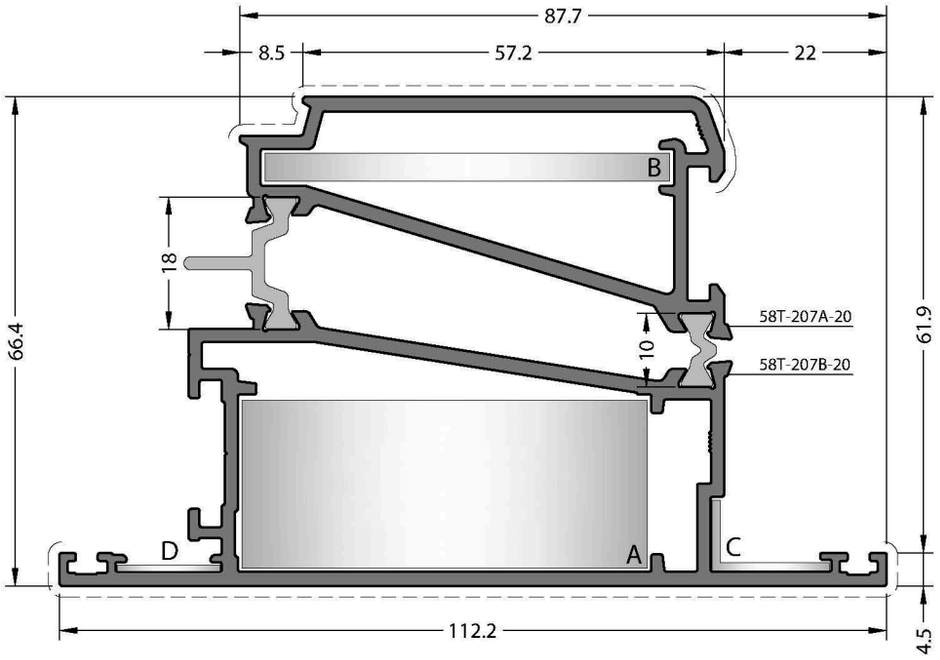

CODE / KOD

58T-207-20

THEORETICAL WEIGHT kg/m

TEORİK AĞIRLIK kg/m

2.581

CORNER JOINTS

KÖŞE BAĞLANTILAR



A CC-113-23.5



B CC-113-04.5



C EM58-22



D MK-20.1

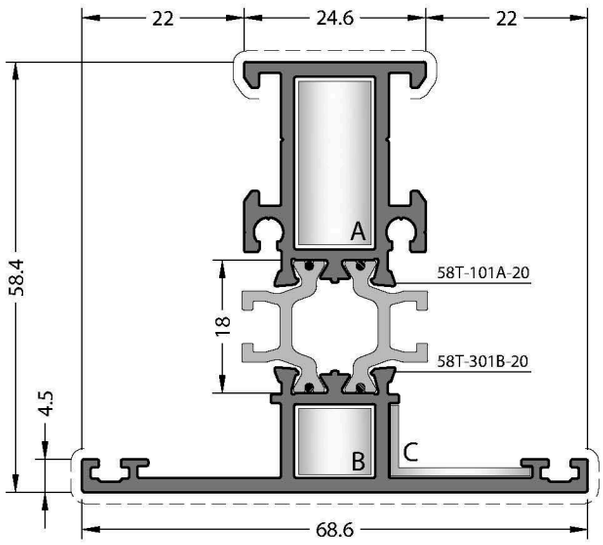

CODE / KOD

58T-301-20

THEORETICAL WEIGHT kg/m

TEORİK AĞIRLIK kg/m

1.394

T JUNCTION

ÇEKTİRME BAĞLANTI



A CC-903-10.5

FOR FRAME / *KASA İÇİN*



B CC-901-10.5

FOR SASH / *KANAT İÇİN*



B CC-902-10.5

CORNER JOINTS

KÖŞE BAĞLANTILAR



A CC-101-23.0



B CC-101-09.6



C EM58-21

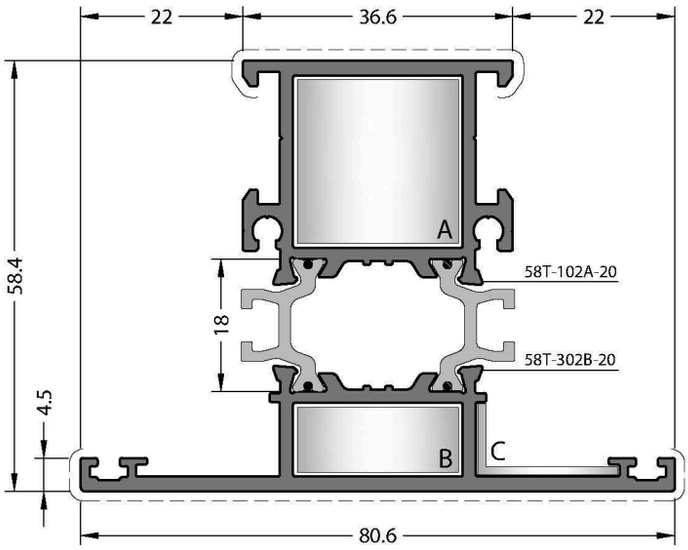

CODE / KOD

58T-302-20

THEORETICAL WEIGHT kg/m

TEORİK AĞIRLIK kg/m

1.662

T JUNCTION

ÇEKTİRME BAĞLANTI



A CC-903-22.5

FOR FRAME / *KASA İÇİN*



B CC-901-22.5

FOR SASH / *KANAT İÇİN*



B CC-902-22.5

CORNER JOINTS

KÖŞE BAĞLANTILAR



A CC-103-23.0



B CC-103-09.6



C EM58-21

58T

PERIMETRIC PROFILES / PERİMETRİK PROFİLLER

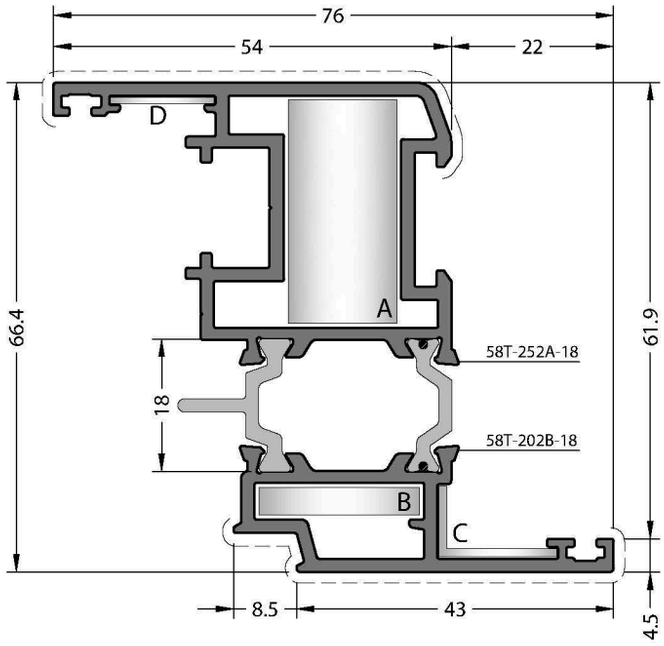

CODE / KOD

58T-252-18

THEORETICAL WEIGHT kg/m

TEORİK AĞIRLIK kg/m

1.713

CORNER JOINTS

KÖŞE BAĞLANTILAR


A CC-110-31.0


B CC-103-04.6


C EM58-22


D MK-20.1

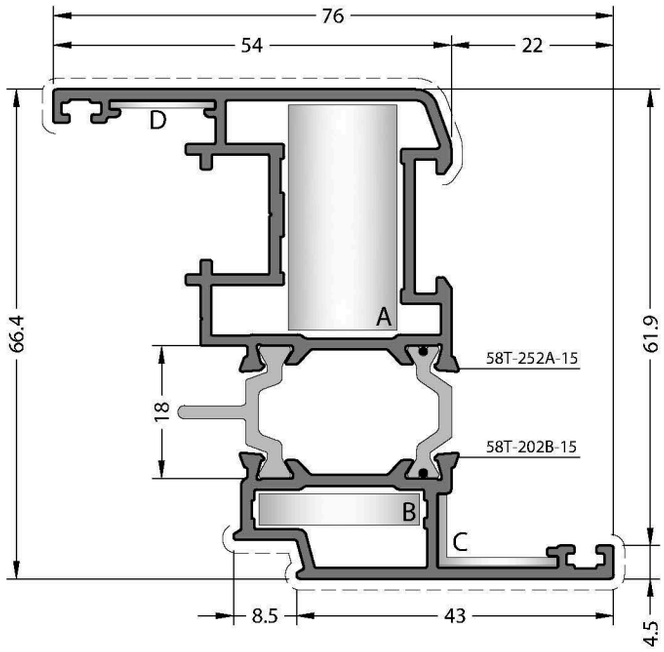

CODE / KOD

58T-252-15

THEORETICAL WEIGHT kg/m

TEORİK AĞIRLIK kg/m

1.515

CORNER JOINTS

KÖŞE BAĞLANTILAR


A CC-110-31.3


B CC-103-04.9


C EM58-22


D MK-20.1

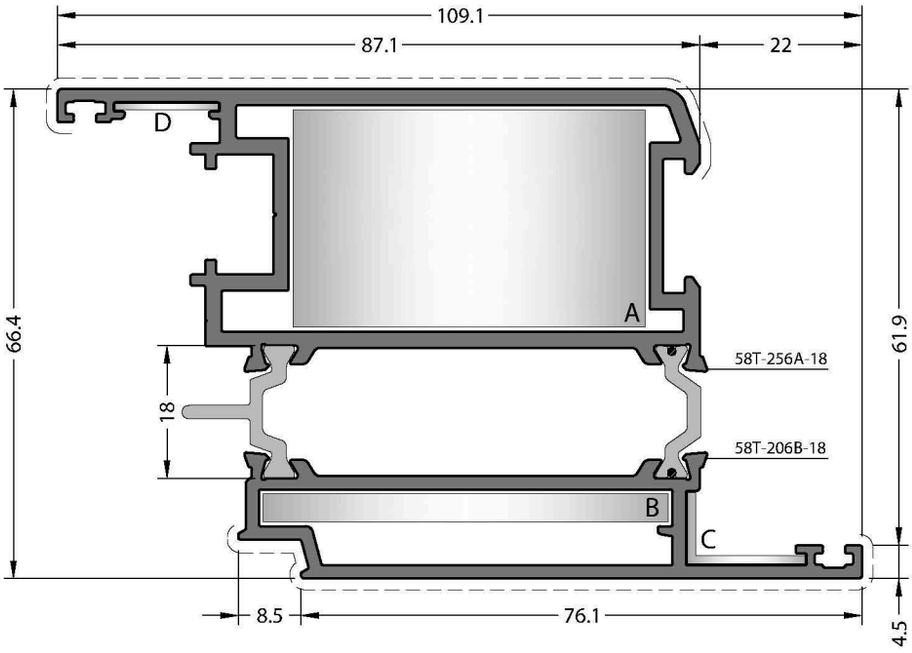

CODE / KOD

58T-256-18

THEORETICAL WEIGHT kg/m

TEORİK AĞIRLIK kg/m

2.548

CORNER JOINTS

KÖŞE BAĞLANTILAR



A CC-117-30.2



B CC-113-04.5



C EM58-22



D MK-20.1

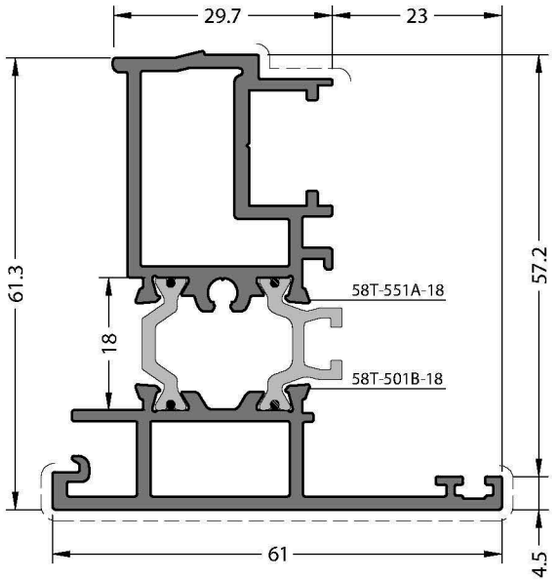

CODE / KOD

58T-551-18

THEORETICAL WEIGHT kg/m

TEORİK AĞIRLIK kg/m

1.509

ADAPTER CAP

ADAPTÖR KAPAĞI



EM58T-551

58T

HIDDEN SASH PROFILES / GİZLİ KANAT PROFİLLERİ

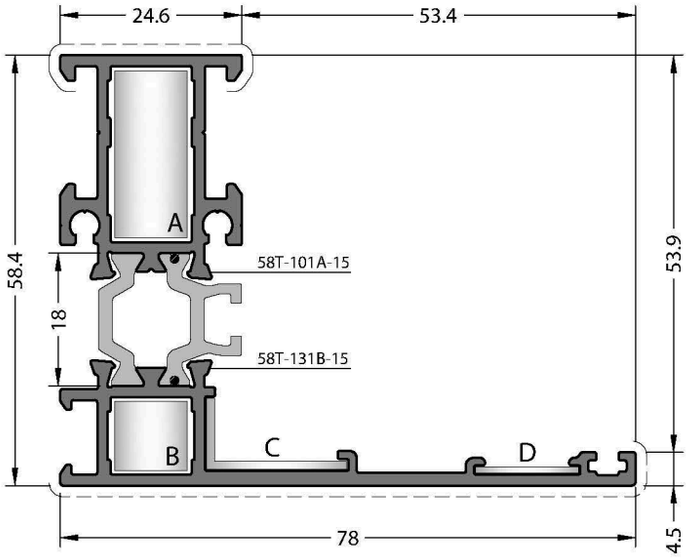

CODE / KOD

58T-131-15

THEORETICAL WEIGHT kg/m

TEORİK AĞIRLIK kg/m

1.333

CORNER JOINTS

KÖŞE BAĞLANTILAR



A CC-101-23.4

B CC-101-10.0

C EM58-21

D MK-20.1

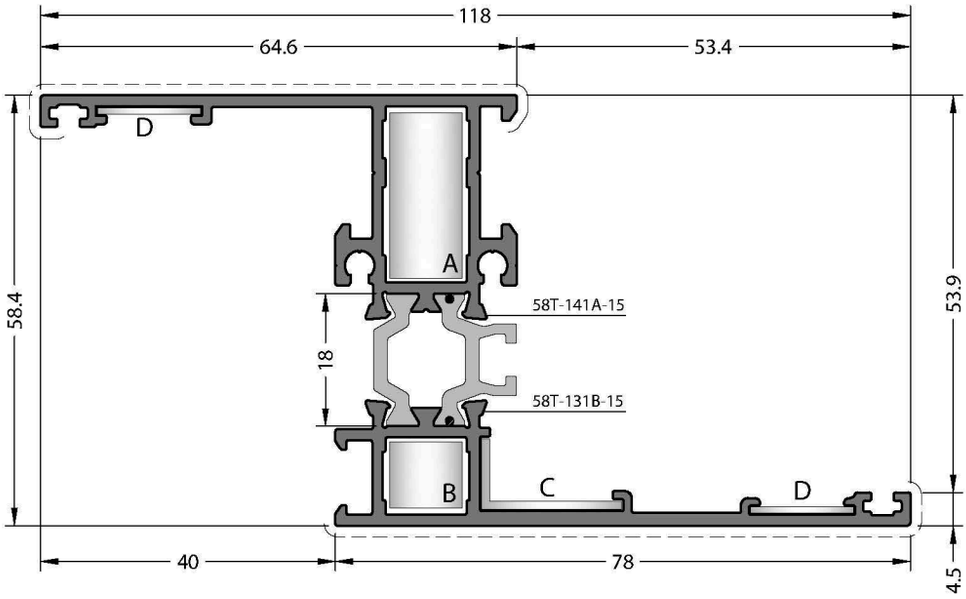

CODE / KOD

58T-141-15

THEORETICAL WEIGHT kg/m

TEORİK AĞIRLIK kg/m

1.533

CORNER JOINTS

KÖŞE BAĞLANTILAR

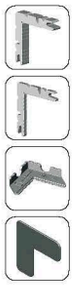

A CC-101-23.4

B CC-101-10.0

C EM58-21

D MK-20.1

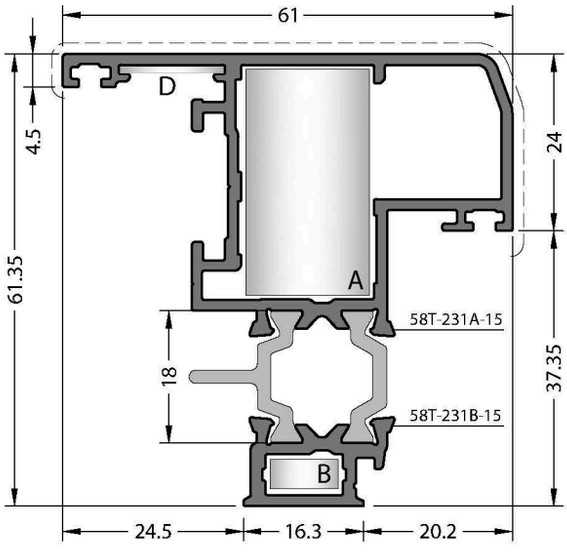

CODE / KOD

58T-231-15

THEORETICAL WEIGHT kg/m

TEORİK AĞIRLIK kg/m

1.283

CORNER JOINTS

KÖŞE BAĞLANTILAR



A CC-122-31.3

B CC-121-05.0

D MK-20.1

58T-231B-15 Black Anodising. / Siyah Eloksal.
No visible surface. / Görünen yüzeyi yoktur.

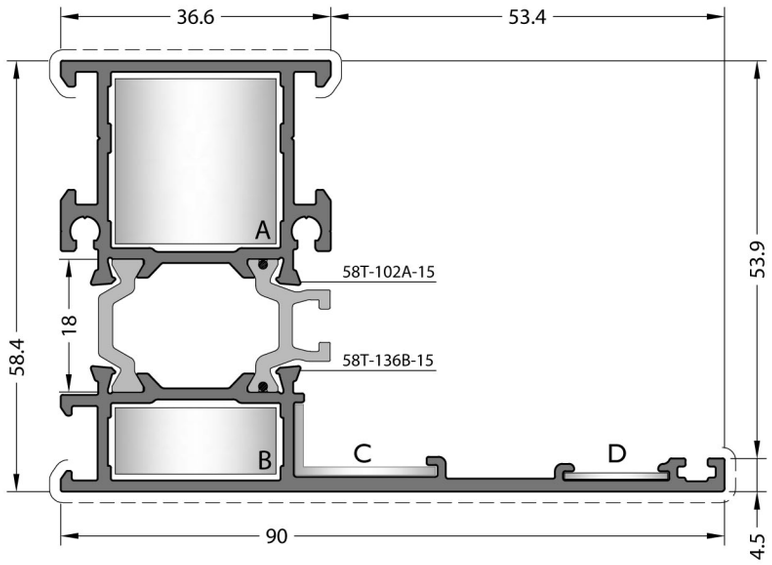

CODE / KOD

58T-136-15

THEORETICAL WEIGHT kg/m

TEORİK AĞIRLIK kg/m

1.540

CORNER JOINTS

KÖŞE BAĞLANTILAR

A CC-103-23.4

B CC-103-10.0

C EM58-21

D MK-20.1

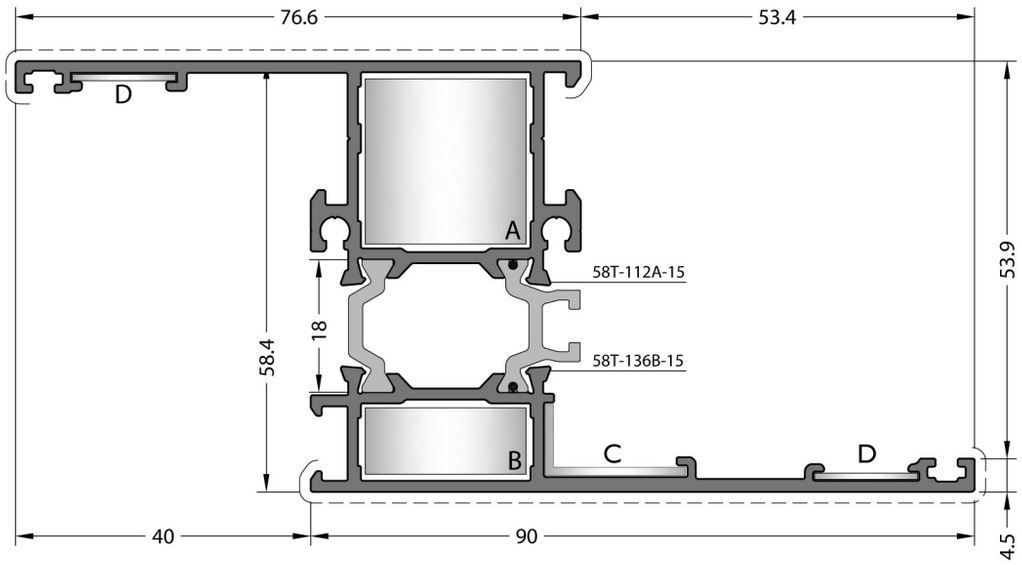

CODE / KOD

58T-137-15

THEORETICAL WEIGHT kg/m

TEORİK AĞIRLIK kg/m

1.745

CORNER JOINTS

KÖŞE BAĞLANTILAR

A CC-103-23.4

B CC-103-10.0

C EM58-21

D MK-20.1

Usable with just one side sash.
Sadece kanat tek tarafta uygulanabilir.

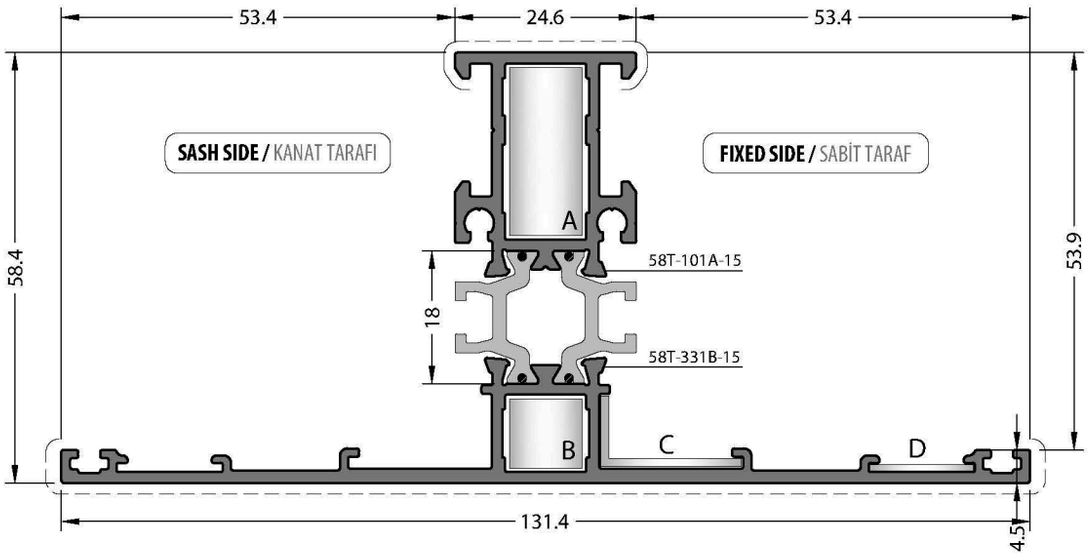

CODE / KOD
58T-331-15

THEORETICAL WEIGHT kg/m
TEORİK AĞIRLIK kg/m
1.636

T JUNCTION
ÇEKTİRME BAĞLANTI

A CC-903-10.5

FOR FRAME / *KASA İÇİN*
B CC-901-10.5

FOR SASH / *KANAT İÇİN*
B CC-902-10.5

CORNER JOINTS
KÖŞE BAĞLANTILAR

C EM58-21

D MK-20.1

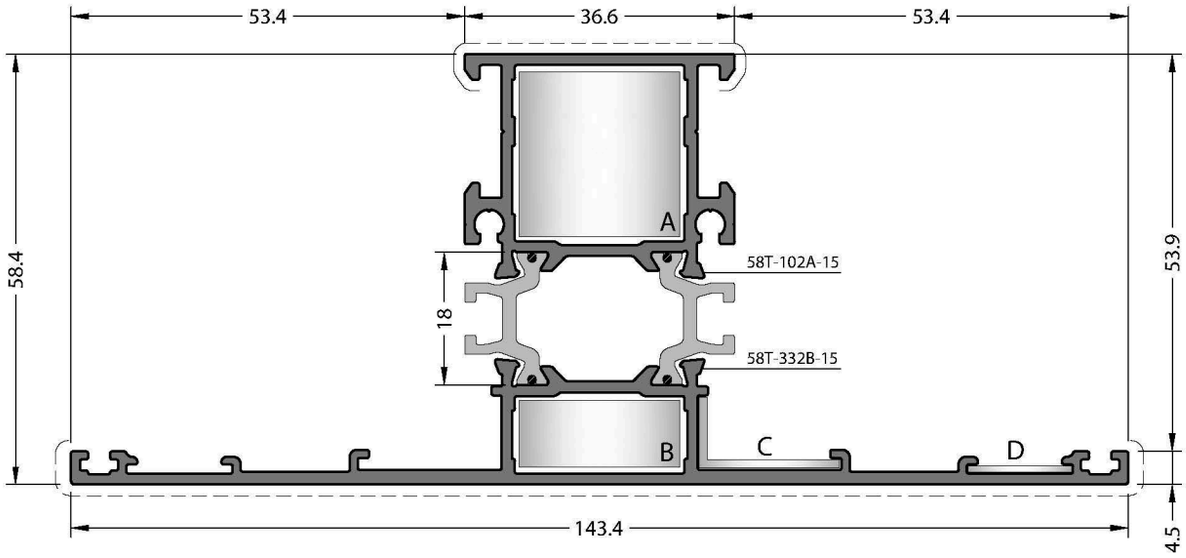

CODE / KOD
58T-332-15

THEORETICAL WEIGHT kg/m
TEORİK AĞIRLIK kg/m
1.843

T JUNCTION
ÇEKTİRME BAĞLANTI

A CC-903-22.5

FOR FRAME / *KASA İÇİN*
B CC-901-22.5

FOR SASH / *KANAT İÇİN*
B CC-902-22.5

CORNER JOINTS
KÖŞE BAĞLANTILAR

C EM58-21

D MK-20.1

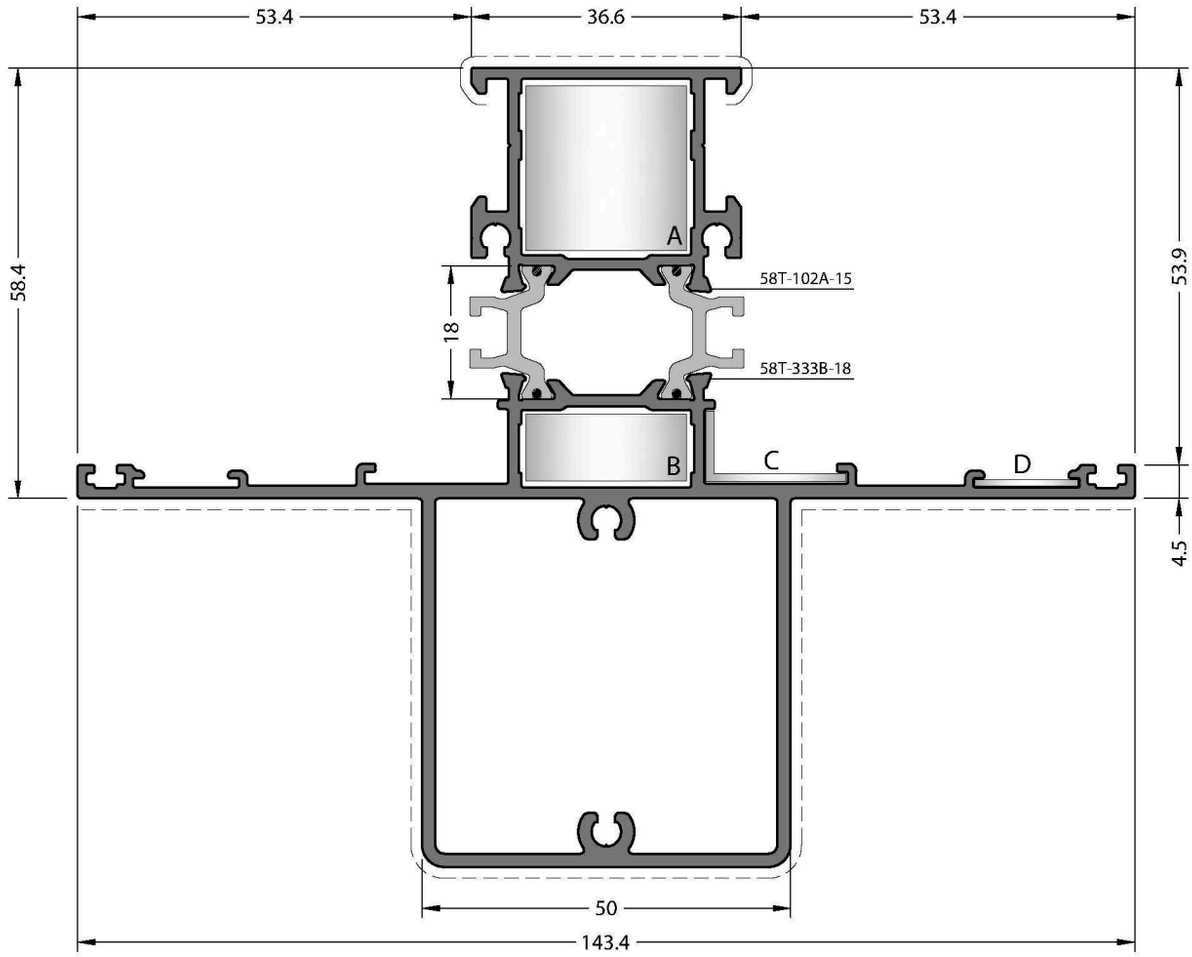

CODE / KOD

58T-333-15

THEORETICAL WEIGHT kg/m

TEORİK AĞIRLIK kg/m

2.677

T JUNCTION

ÇEKTİRME BAĞLANTI

A CC-903-22.5

FOR FRAME / *KASA İÇİN*

B CC-901-22.5

FOR SASH / *KANAT İÇİN*

B CC-902-22.5

CORNER JOINTS

KÖŞE BAĞLANTILAR

A CC-103-23.4

B CC-103-10.0

C EM58-21

D MK-20.1

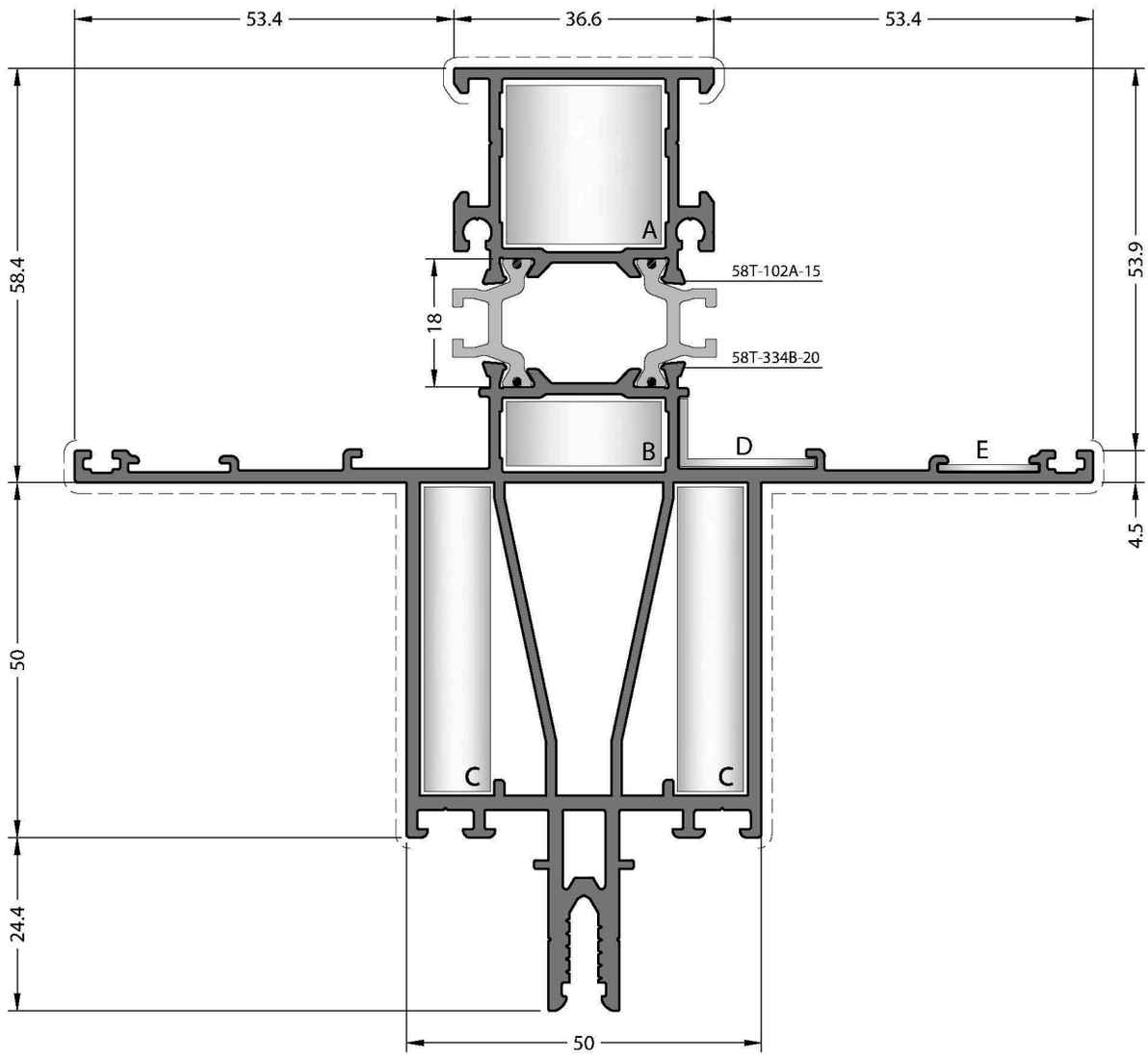

CODE / KOD

58T-334-15

THEORETICAL WEIGHT kg/m

TEORİK AĞIRLIK kg/m

3.430

T JUNCTION

ÇEKTİRME BAĞLANTI

A CC-903-22.5

FOR FRAME / *KASA İÇİN*

B CC-901-22.5

FOR SASH / *KANAT İÇİN*

B CC-902-22.5

CORNER JOINTS

KÖŞE BAĞLANTILAR

A CC-103-23.4

B CC-103-10.0

C CC-121-43.6

D EM58-21

E MK-20.1

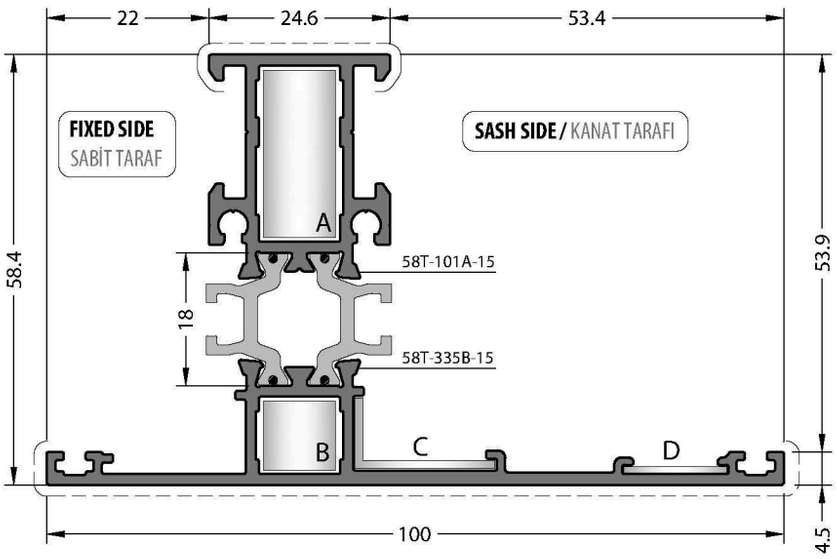

CODE / KOD

58T-335-15

THEORETICAL WEIGHT kg/m
TEORİK AĞIRLIK kg/m

1.450

T JUNCTION
ÇEKTİRME BAĞLANTI


A CC-903-10.5

FOR FRAME / KASA İÇİN


B CC-901-10.5

FOR SASH / KANAT İÇİN


B CC-902-10.5

CORNER JOINTS
KÖŞE BAĞLANTILAR


A CC-101-23.4


B CC-101-10.0


C EM58-21


D MK-20.1

No visible surface. / Görünen yüzeyi yoktur.

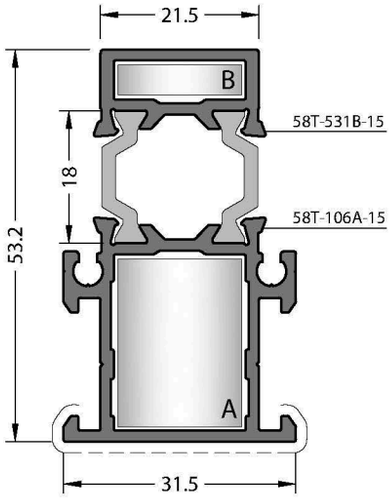

CODE / KOD

58T-531-15

THEORETICAL WEIGHT kg/m
TEORİK AĞIRLIK kg/m

1.021

CORNER JOINTS
KÖŞE BAĞLANTILAR


A CC-122-23.4


B CC-122-04.8

Black Anodising. / Siyah Eloksal.
No visible surface. / Görünen yüzeyi yoktur.

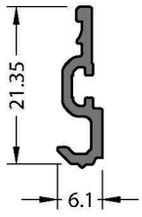

CODE / KOD

58T-831-00

THEORETICAL WEIGHT kg/m
TEORİK AĞIRLIK kg/m

0.129

58T

DETAILS / DETAYLAR

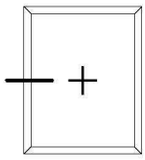

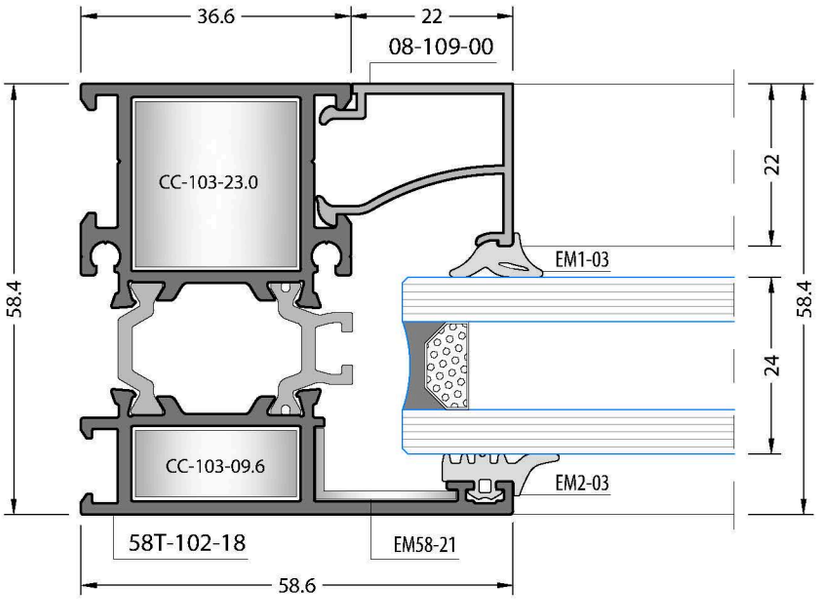
36.6
22
08-109-00
CC-103-23.0
EM1-03
58.4
22
58.4
24
CC-103-09.6
EM2-03
58T-102-18
EM58-21
58.6

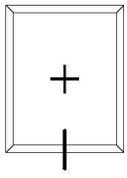

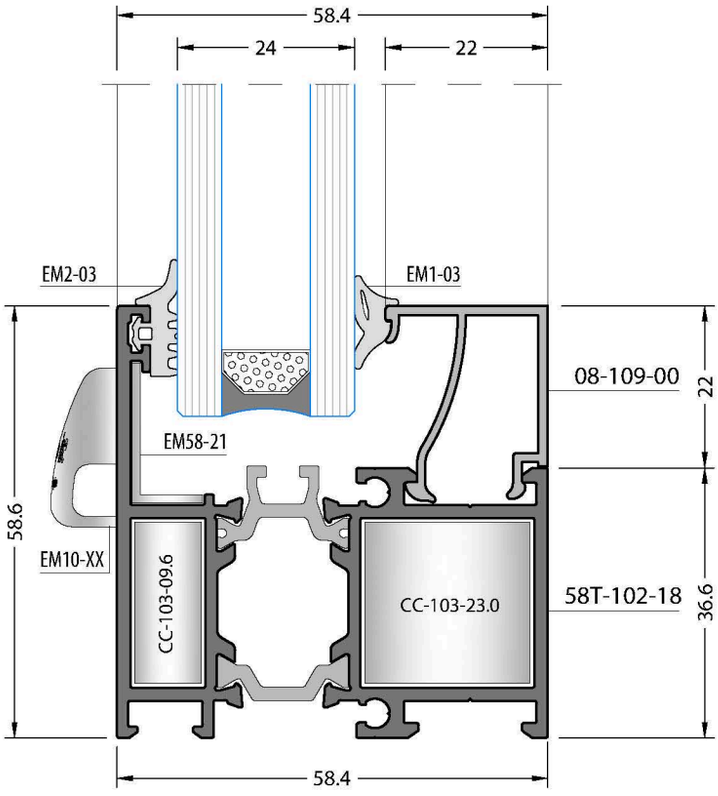
58.4
24
22
EM2-03
EM1-03
08-109-00
22
EM58-21
58.6
EM10-XX
CC-103-09.6
CC-103-23.0
58T-102-18
36.6
58.4

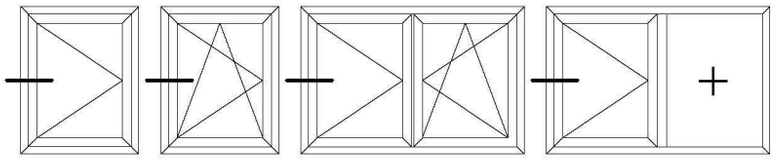

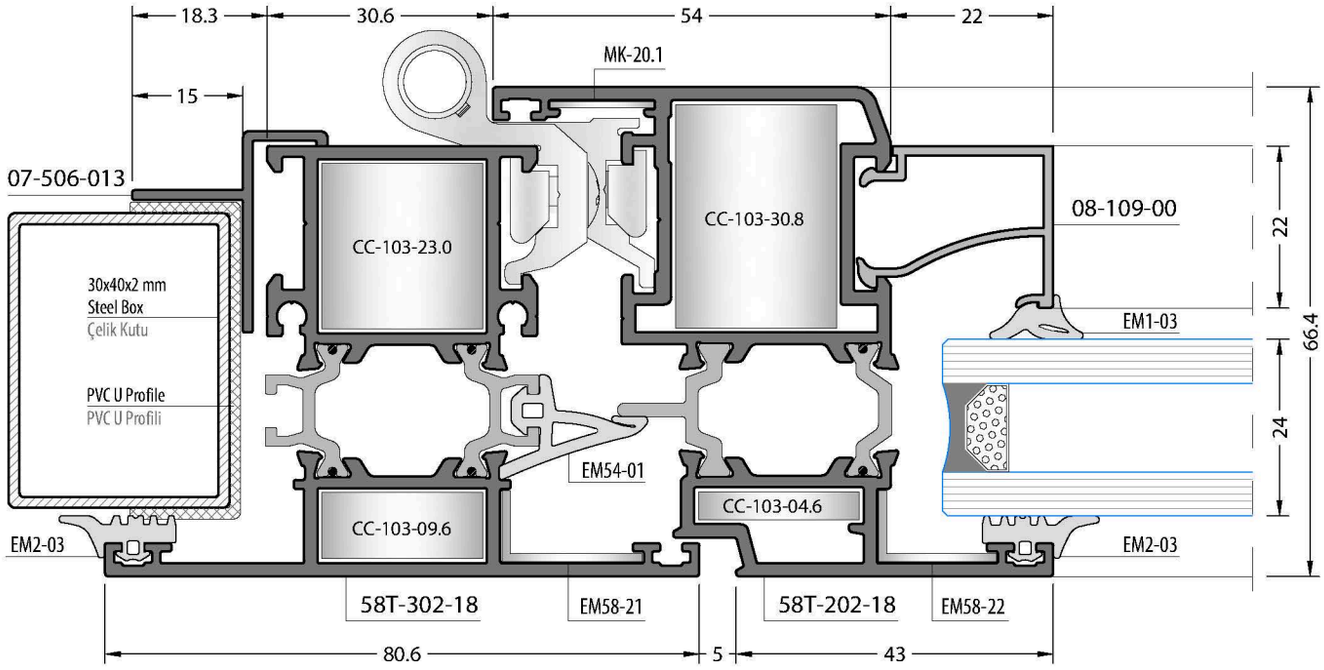
18.3
30.6
54
22
15
MK-20.1
07-506-013
CC-103-23.0
CC-103-30.8
08-109-00
30x40x2 mm
Steel Box
Çelik Kutu
PVC U Profile
PVC U Profili
EM1-03
22
24
66.4
EM54-01
CC-103-04.6
CC-103-09.6
EM2-03
EM2-03
58T-302-18
EM58-21
58T-202-18
EM58-22
80.6
5
43

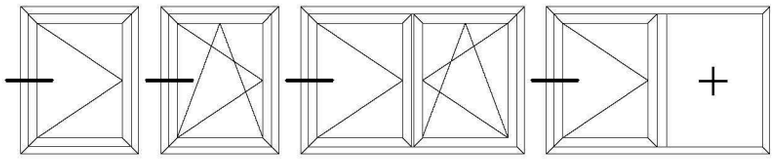

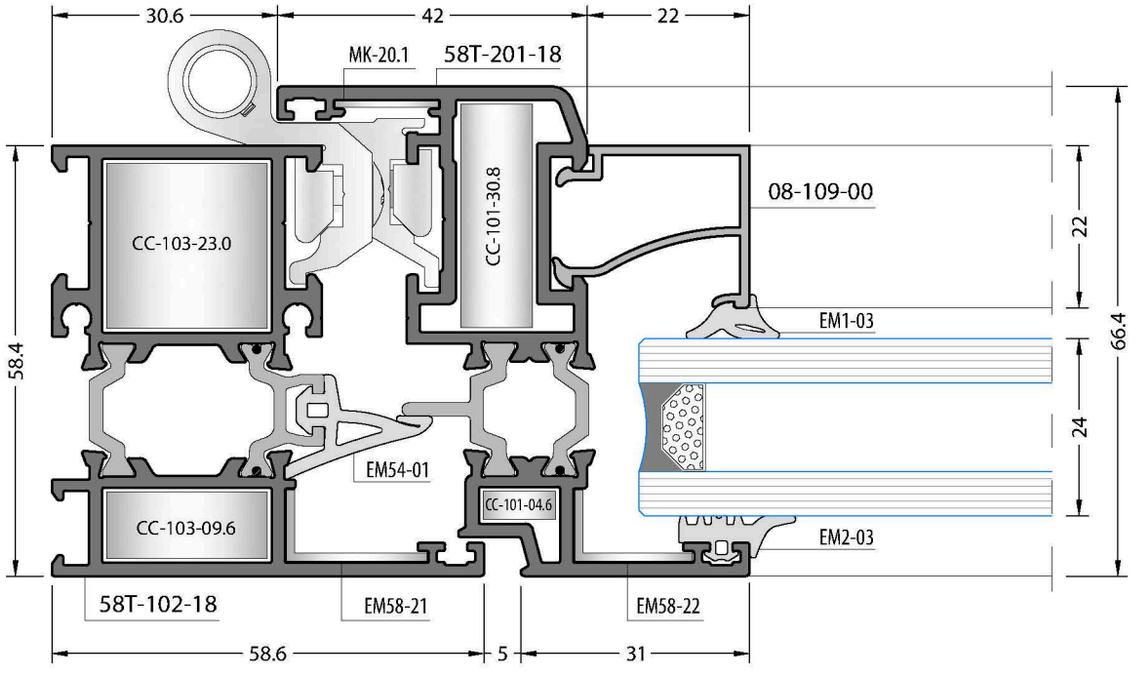
30.6
42
22
MK-20.1
58T-201-18
CC-101-30.8
08-109-00
CC-103-23.0
22
66.4
EM1-03
58.4
24
EM54-01
CC-101-04.6
CC-103-09.6
EM2-03
58T-102-18
EM58-21
EM58-22
58.6
5
31

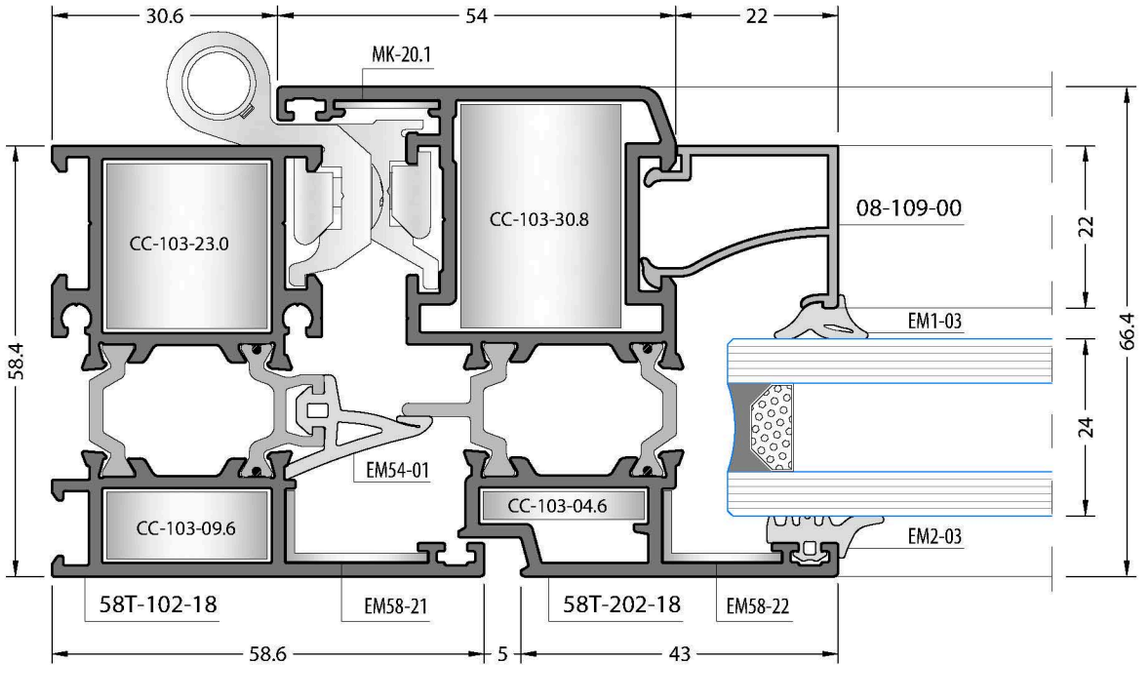
30.6
54
22
MK-20.1
CC-103-30.8
08-109-00
CC-103-23.0
22
66.4
EM1-03
58.4
24
EM54-01
CC-103-04.6
CC-103-09.6
EM2-03
58T-102-18
EM58-21
58T-202-18
EM58-22
58.6
5
43

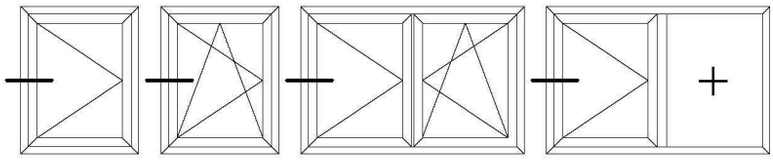

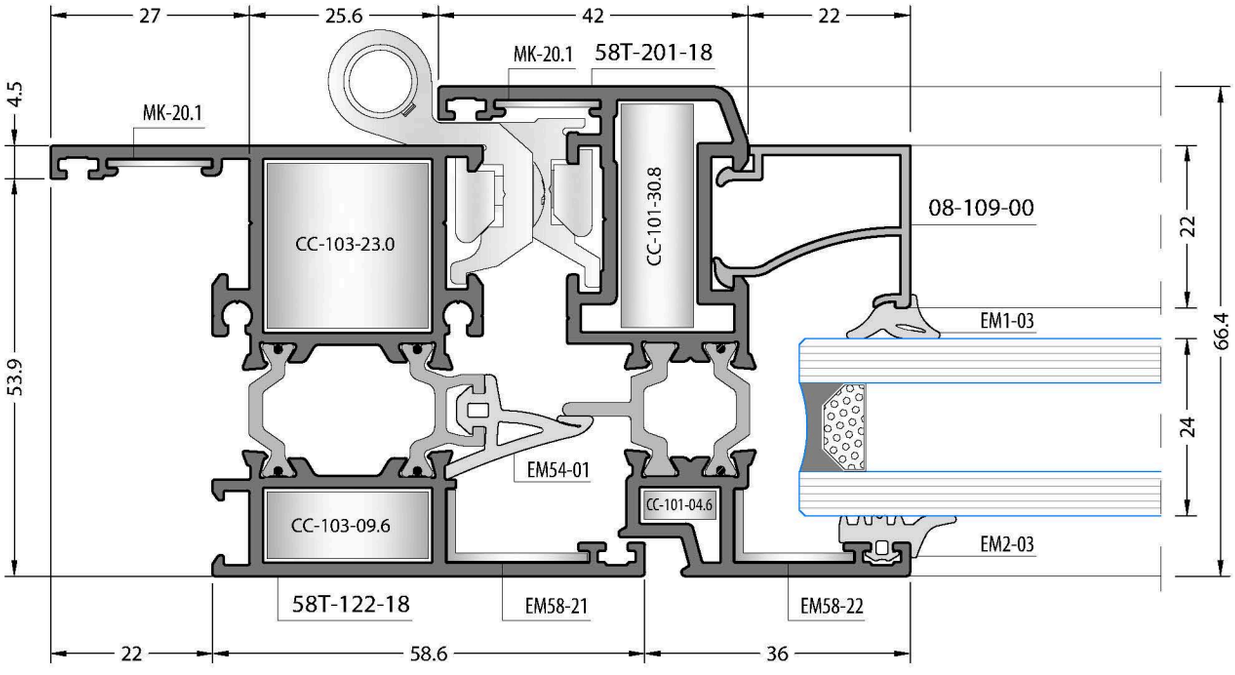
27
25.6
42
22
MK-20.1
58T-201-18
4.5
MK-20.1
CC-103-23.0
CC-101-30.8
08-109-00
22
EM1-03
66.4
53.9
24
EM54-01
CC-101-04.6
CC-103-09.6
EM2-03
58T-122-18
EM58-21
EM58-22
22
58.6
36

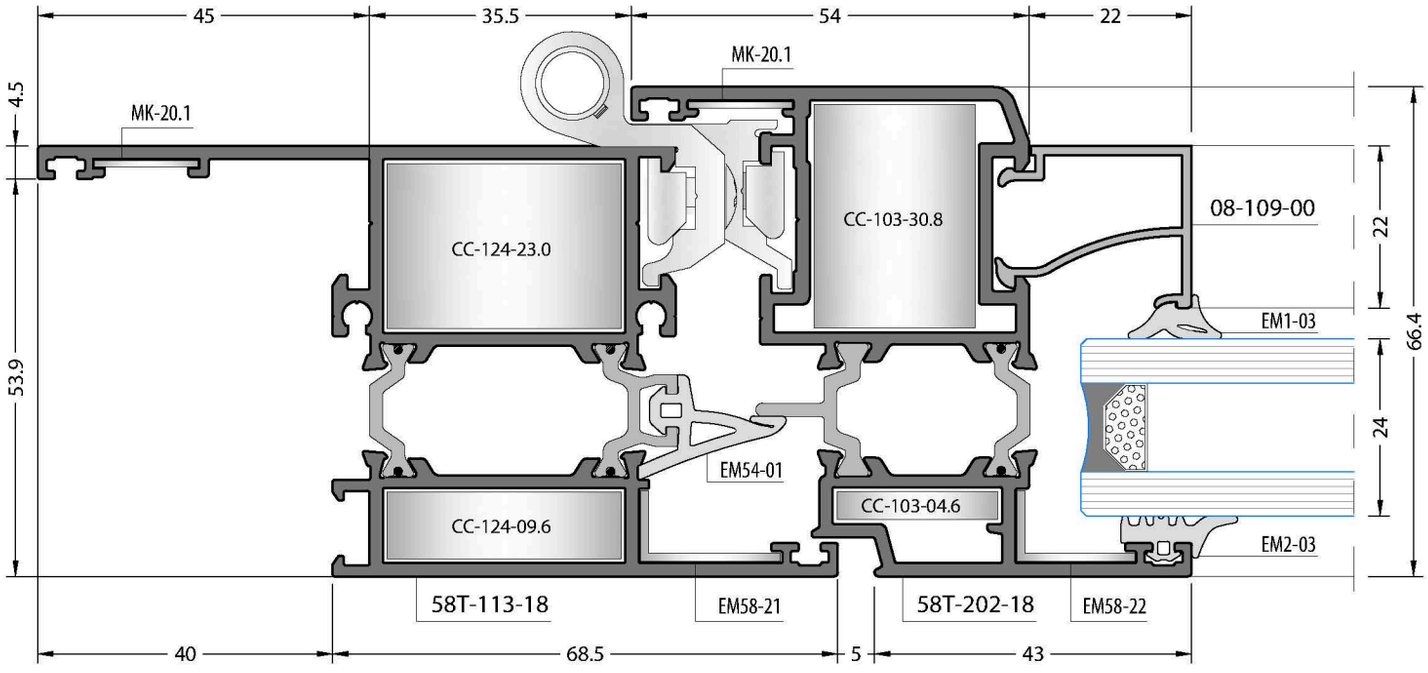
45
35.5
54
22
MK-20.1
4.5
MK-20.1
CC-124-23.0
CC-103-30.8
08-109-00
22
EM1-03
66.4
53.9
24
EM54-01
CC-103-04.6
CC-124-09.6
EM2-03
58T-113-18
EM58-21
58T-202-18
EM58-22
40
68.5
5
43

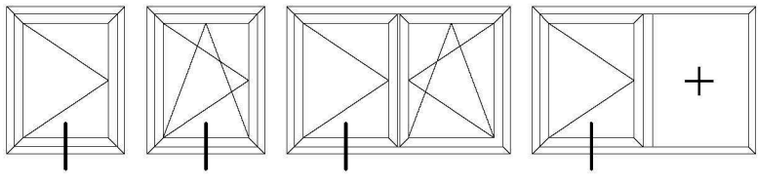

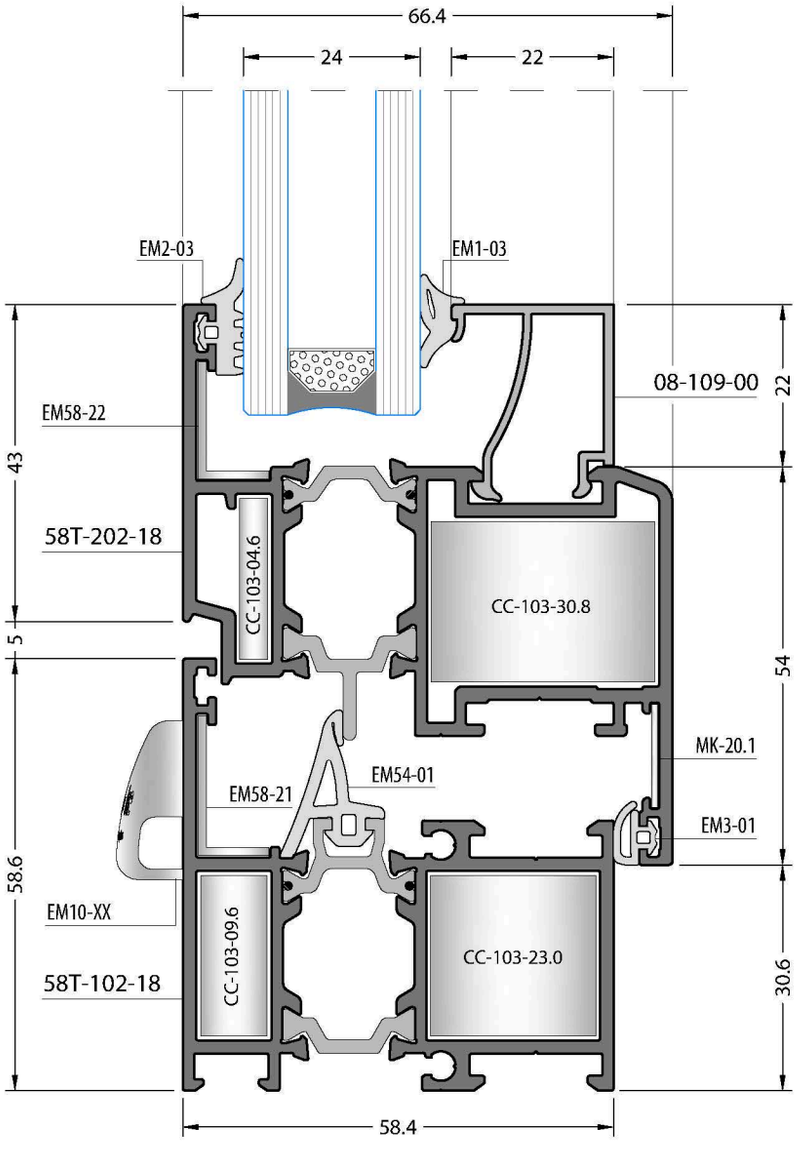
66.4
24
22
EM2-03
EM1-03
08-109-00
22
EM58-22
43
58T-202-18
CC-103-04.6
CC-103-30.8
5
54
MK-20.1
EM54-01
EM58-21
EM3-01
58.6
EM10-XX
CC-103-09.6
CC-103-23.0
58T-102-18
30.6
58.4

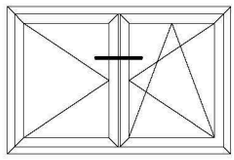

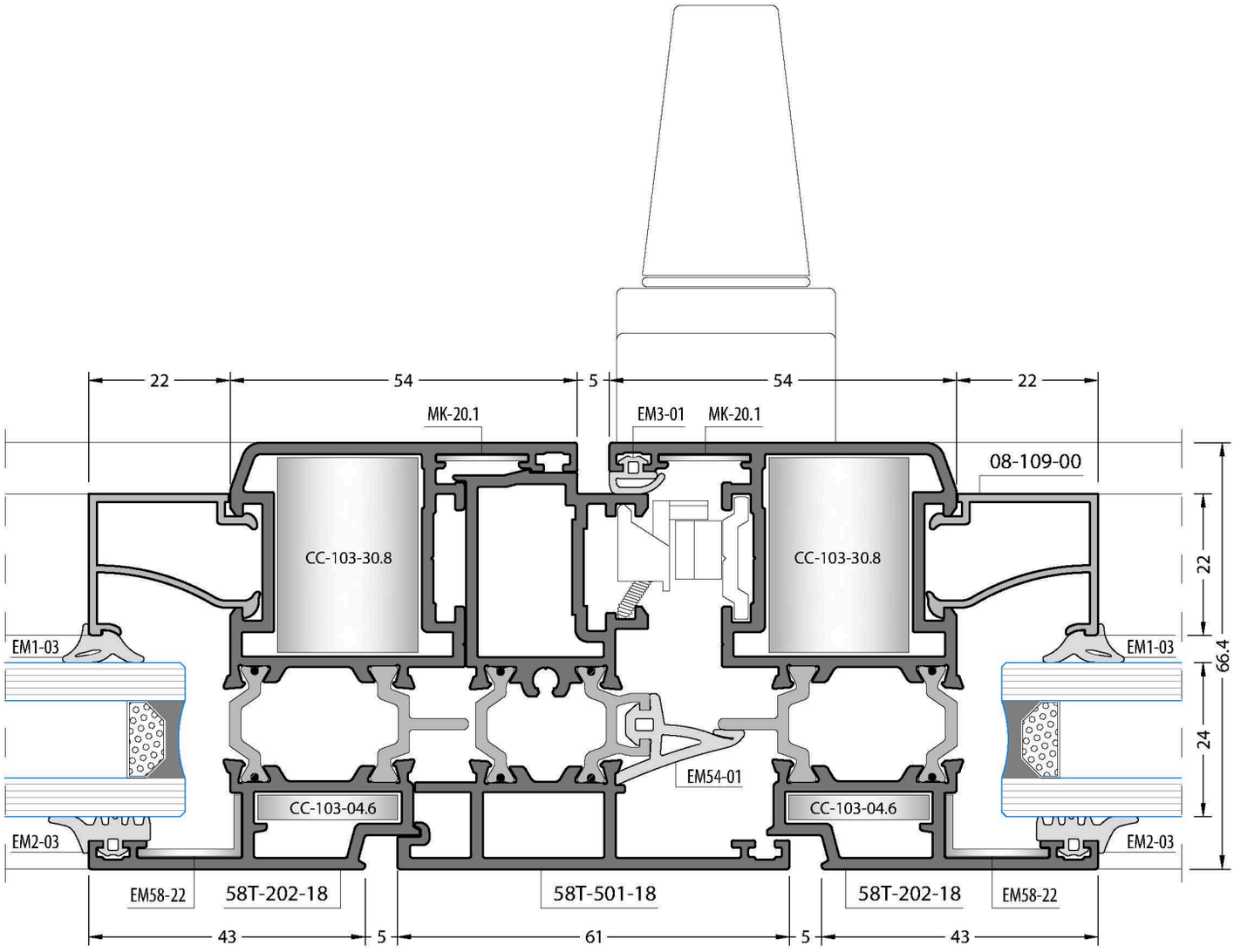
22
54
5
54
22
MK-20.1
EM3-01
MK-20.1
08-109-00
CC-103-30.8
CC-103-30.8
22
66.4
EM1-03
EM1-03
24
EM54-01
CC-103-04.6
CC-103-04.6
EM2-03
EM2-03
EM58-22
58T-202-18
58T-501-18
58T-202-18
EM58-22
43
5
61
5
43

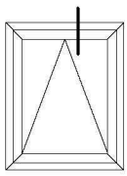

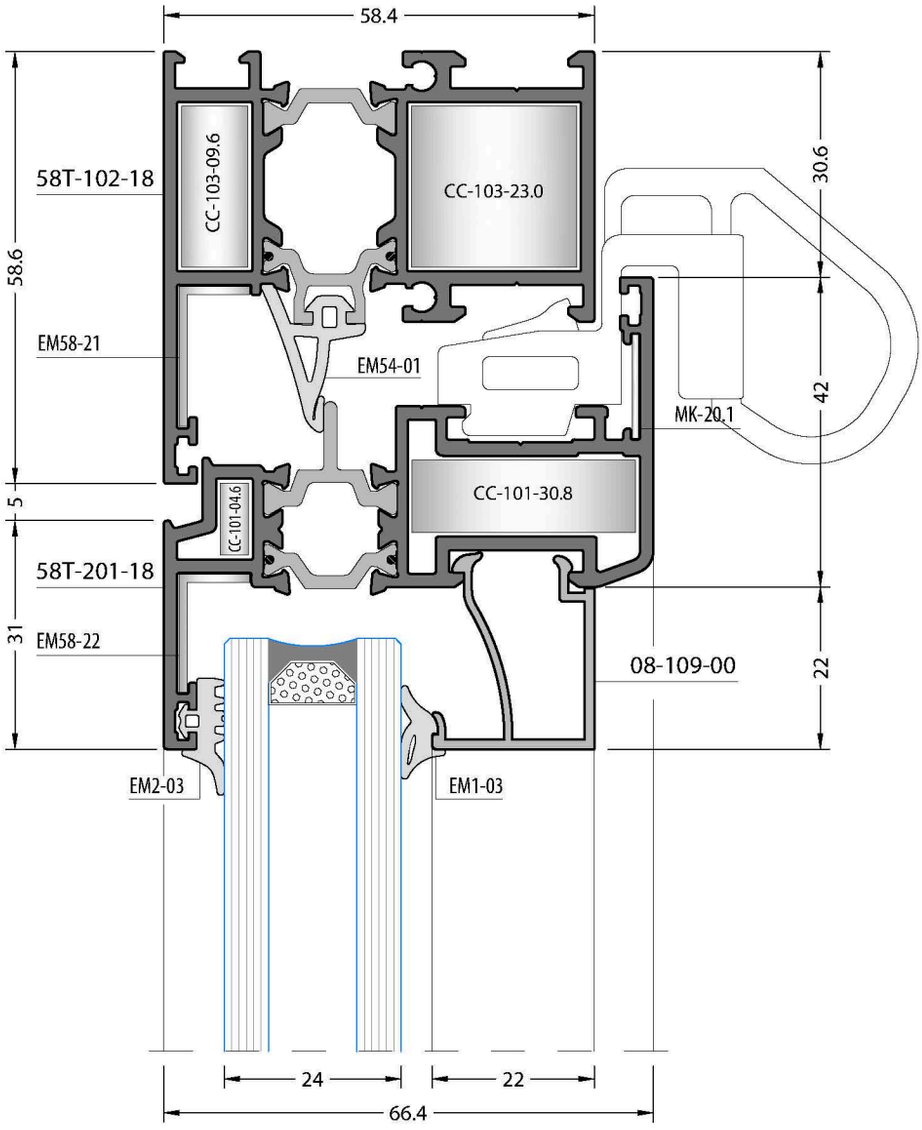
58.4
58.6
58T-102-18
CC-103-09.6
CC-103-23.0
30.6
EM58-21
EM54-01
MK-20.1
42
5
CC-101-04.6
CC-101-30.8
58T-201-18
31
EM58-22
08-109-00
22
EM2-03
EM1-03
24
22
66.4

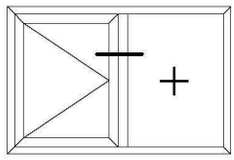

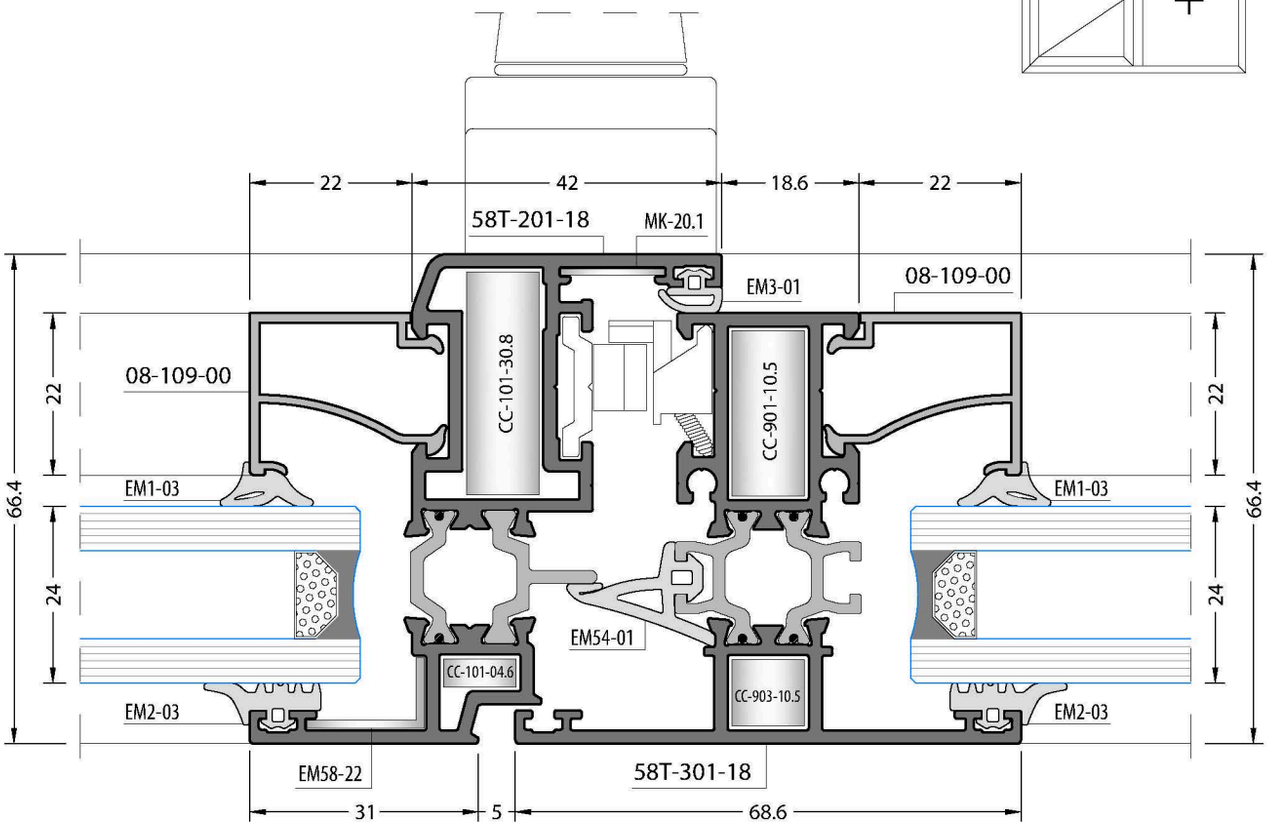
22
42
18.6
22
58T-201-18
MK-20.1
EM3-01
08-109-00
08-109-00
CC-101-30.8
CC-901-10.5
22
22
66.4
66.4
EM1-03
EM1-03
24
24
EM54-01
CC-101-04.6
CC-903-10.5
EM2-03
EM2-03
EM58-22
58T-301-18
31
5
68.6

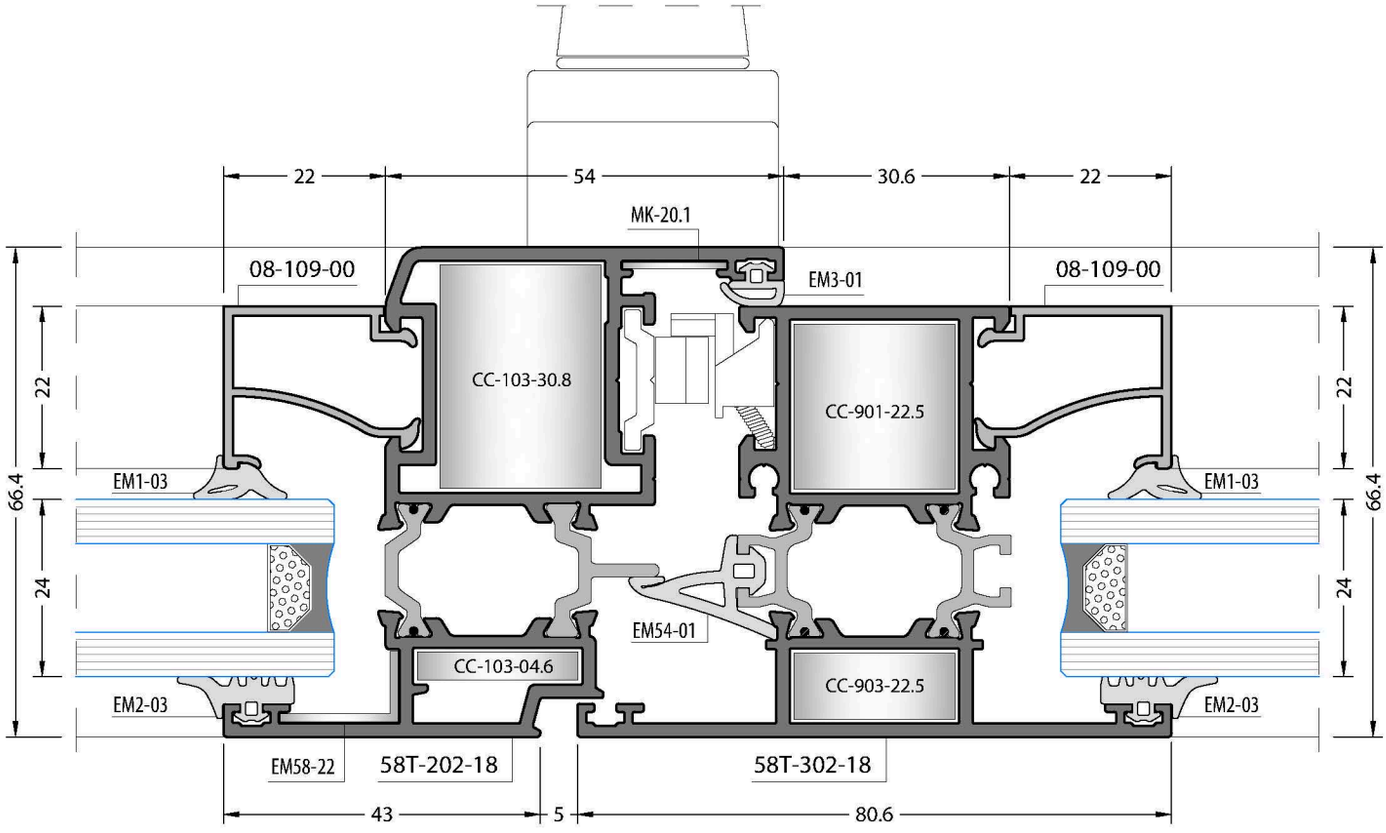
22
54
30.6
22
MK-20.1
08-109-00
EM3-01
08-109-00
CC-103-30.8
CC-901-22.5
22
22
66.4
66.4
EM1-03
EM1-03
24
24
EM54-01
CC-103-04.6
CC-903-22.5
EM2-03
EM2-03
EM58-22
58T-202-18
58T-302-18
43
5
80.6

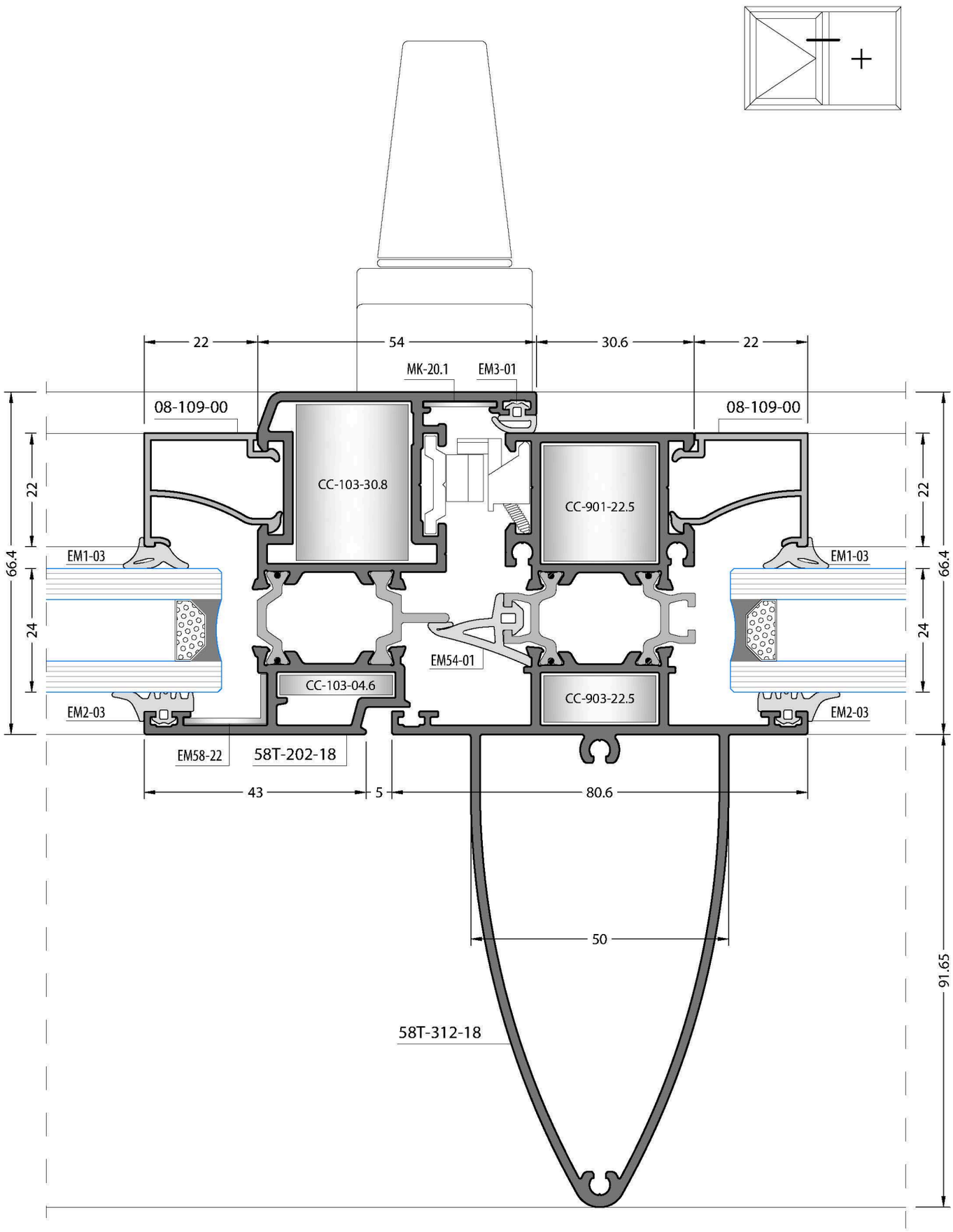
22
54
30.6
22
MK-20.1
EM3-01
08-109-00
08-109-00
CC-103-30.8
CC-901-22.5
66.4
22
24
EM1-03
EM1-03
EM54-01
CC-103-04.6
CC-903-22.5
EM2-03
EM2-03
EM58-22
58T-202-18
43
5
80.6
50
58T-312-18
91.65

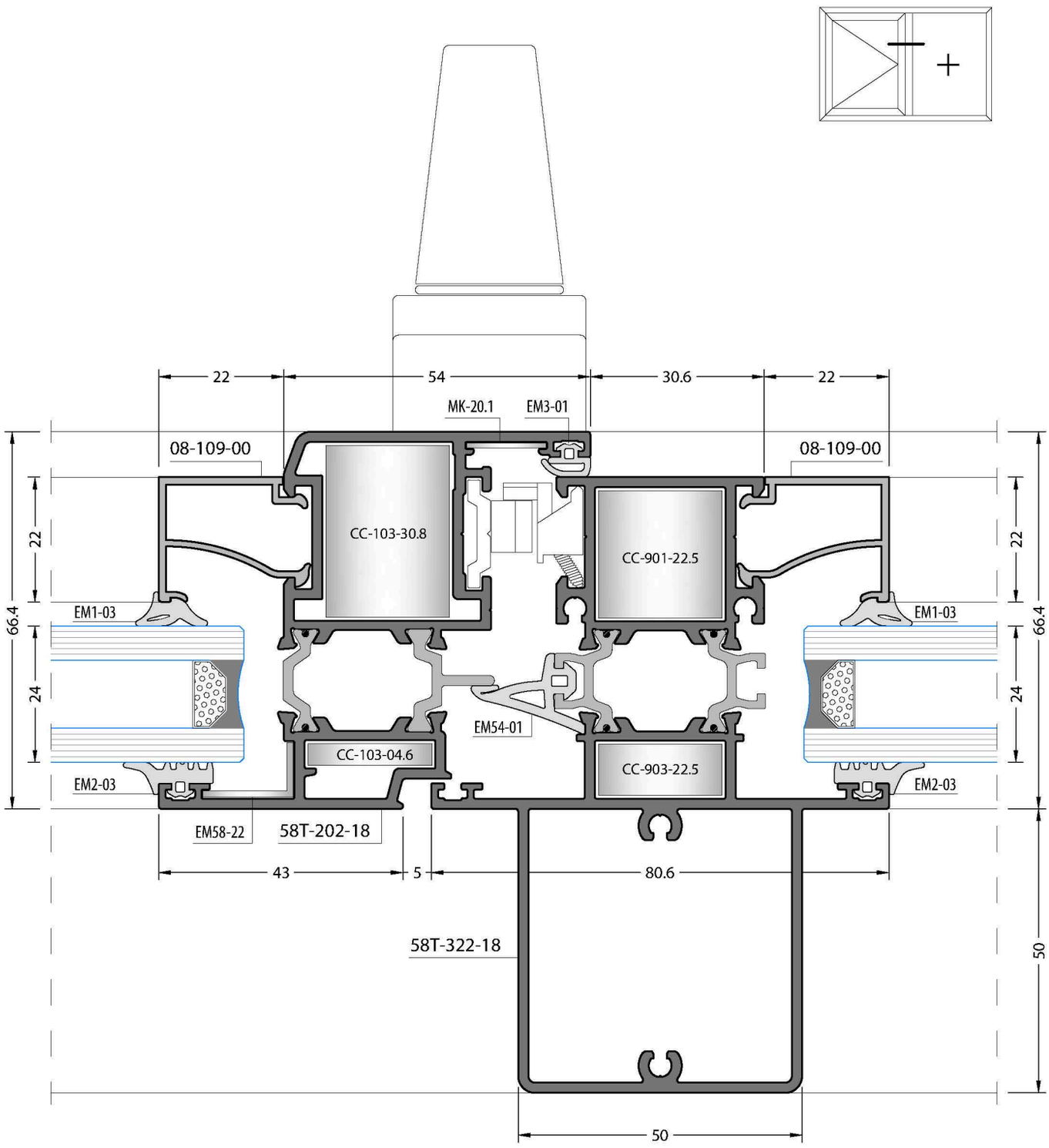
22
54
30.6
22
MK-20.1
EM3-01
08-109-00
08-109-00
CC-103-30.8
CC-901-22.5
66.4
22
24
EM1-03
EM1-03
EM54-01
CC-103-04.6
CC-903-22.5
EM2-03
EM2-03
EM58-22
58T-202-18
43
5
80.6
58T-322-18
50
50

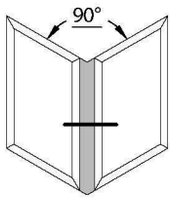
90°

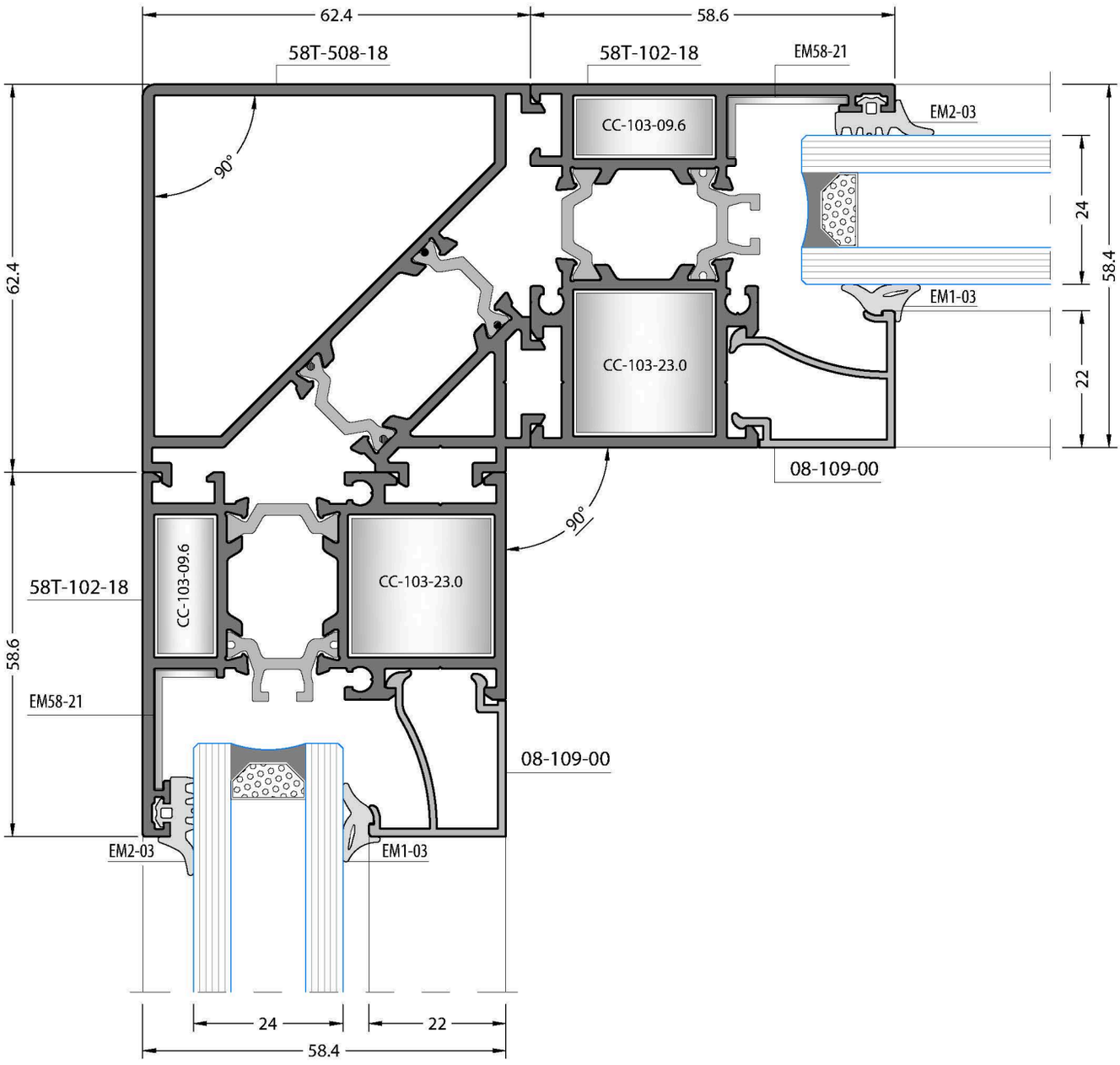
62.4
58.6
58T-508-18
58T-102-18
EM58-21
EM2-03
CC-103-09.6
90°
24
58.4
62.4
EM1-03
CC-103-23.0
22
08-109-00
90°
58T-102-18
CC-103-09.6
CC-103-23.0
58.6
EM58-21
08-109-00
EM2-03
EM1-03
24
22
58.4

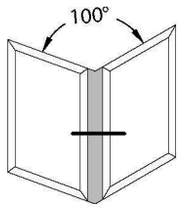
100°

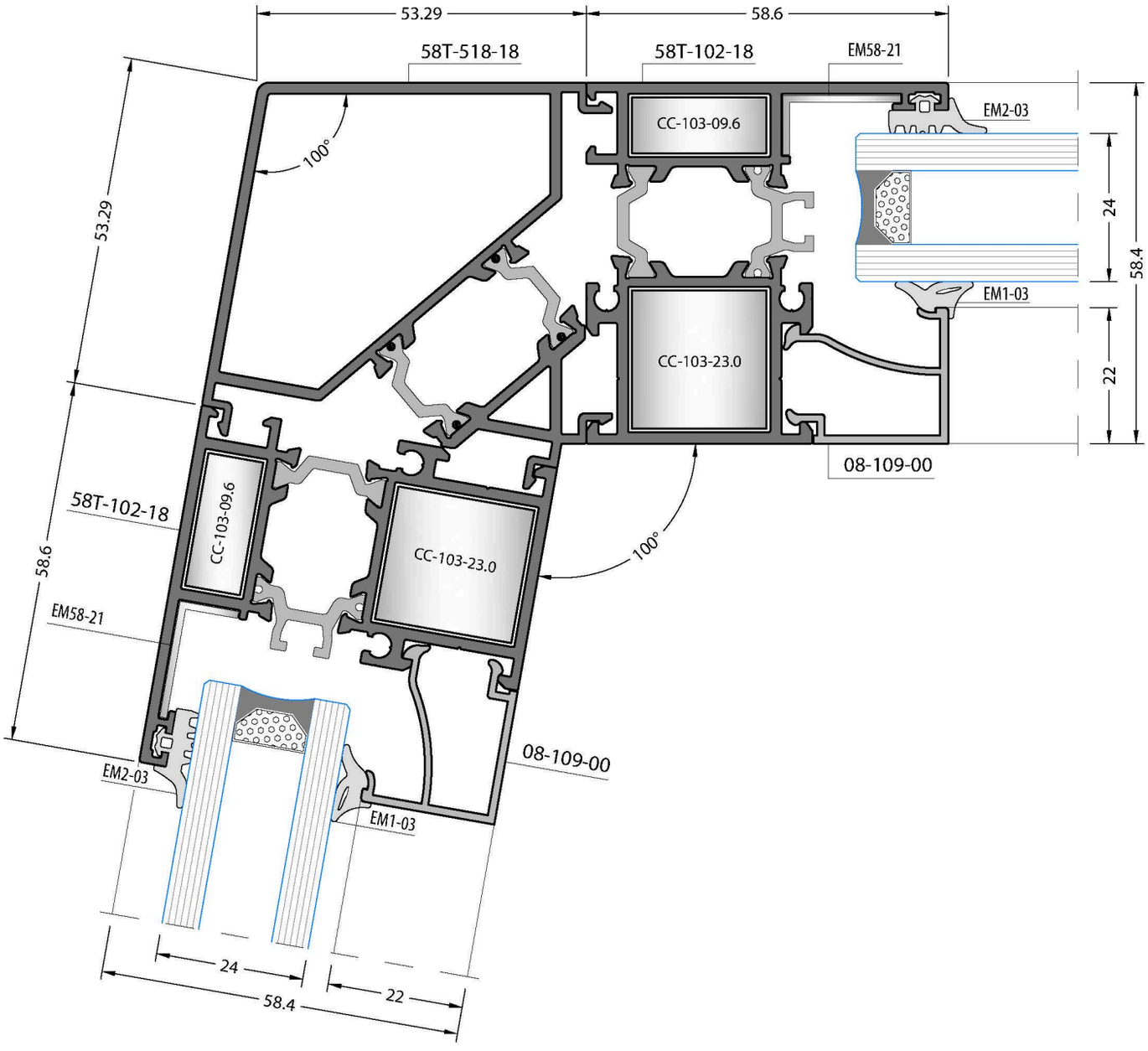
53.29
58.6
58T-518-18
58T-102-18
EM58-21
EM2-03
CC-103-09.6
100°
53.29
24
58.4
EM1-03
CC-103-23.0
22
08-109-00
58T-102-18
CC-103-09.6
CC-103-23.0
100°
58.6
EM58-21
08-109-00
EM2-03
EM1-03
24
58.4
22

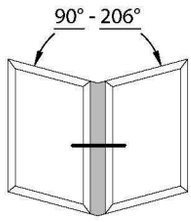

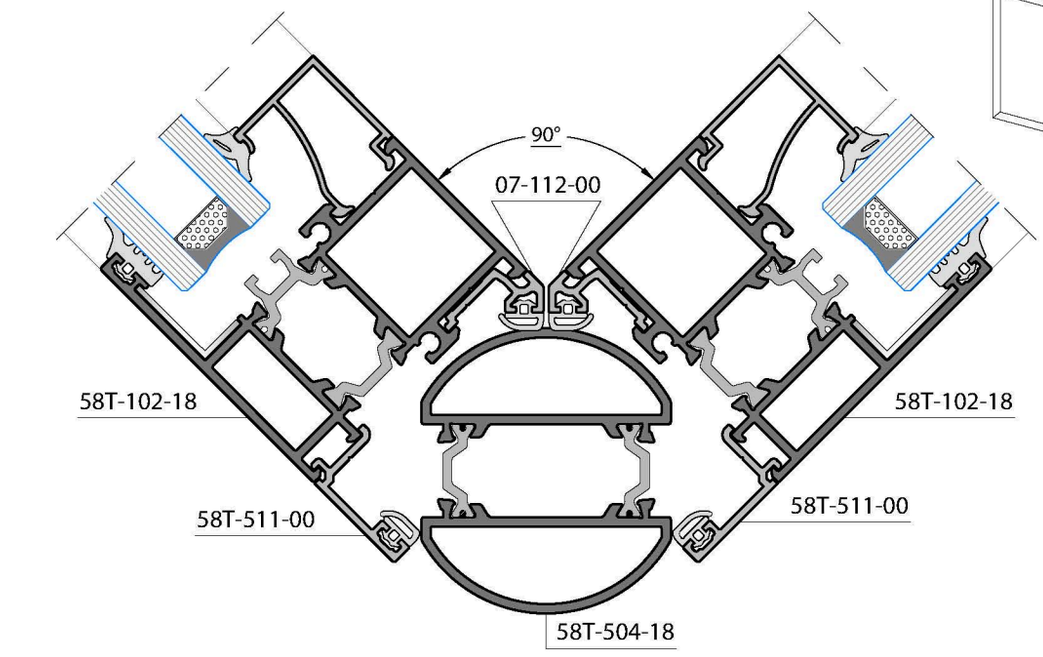

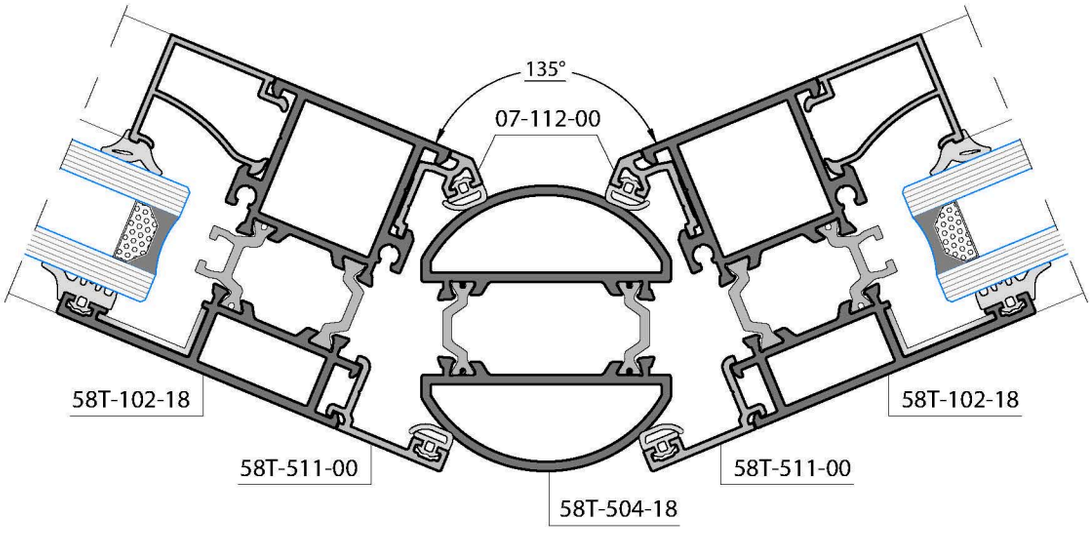

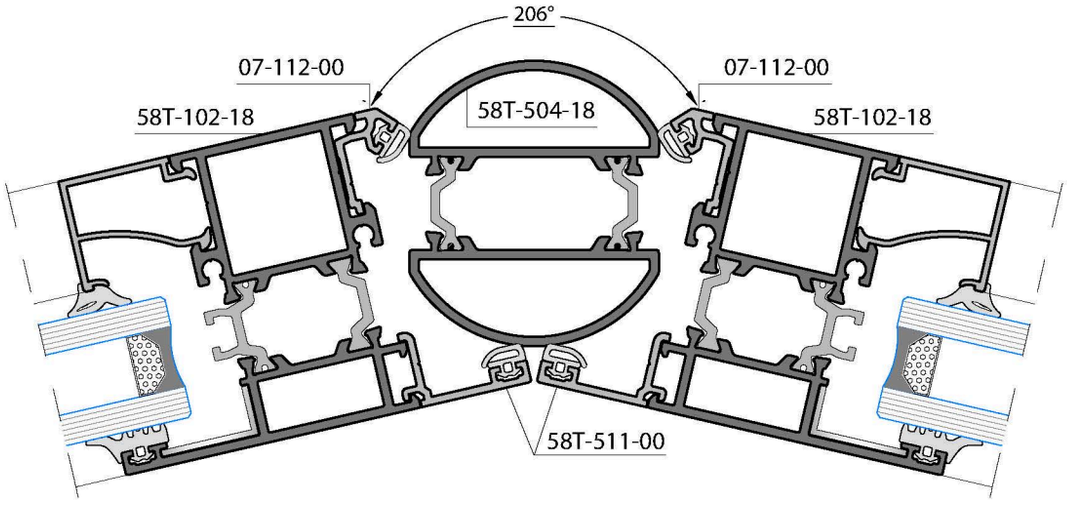

Not scaled / Ölçeksizdir

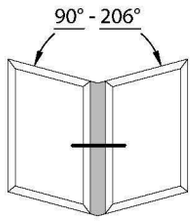

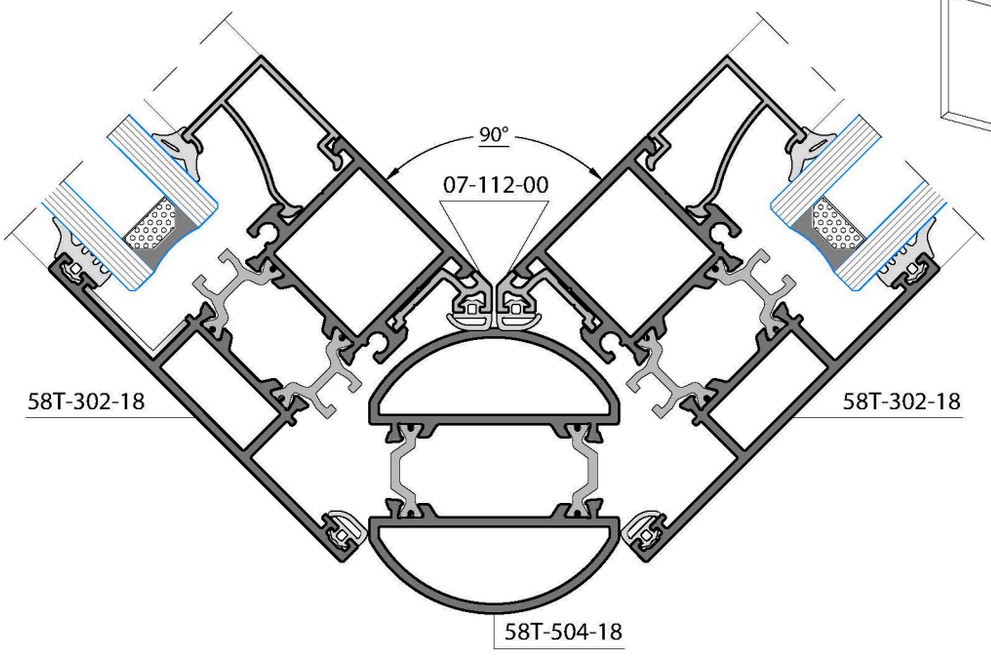

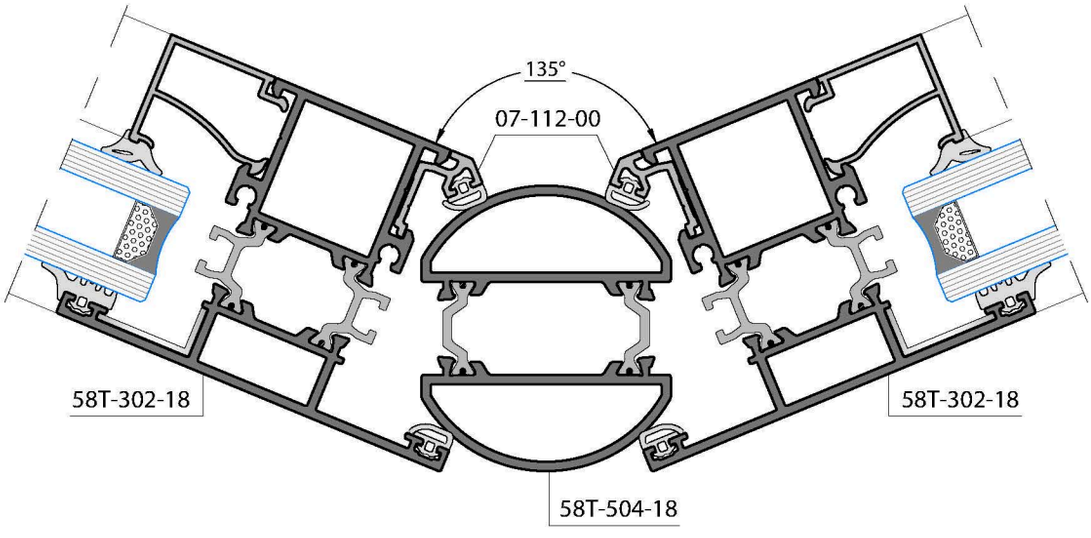

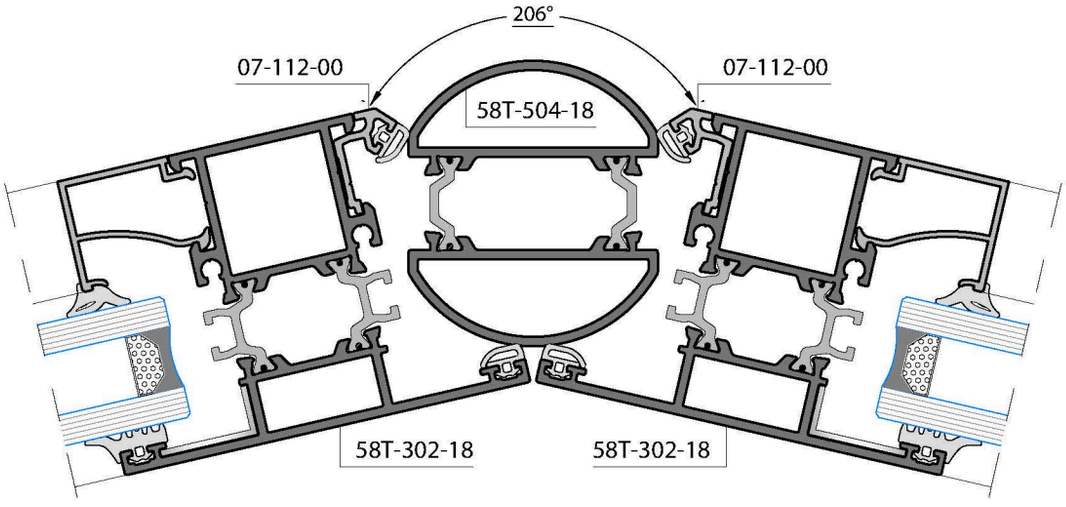

Not scaled / Ölçeksizdir

Exterior Window Sash Profile Details / Dışa Açılır Pencere Kanat Profil Detayları

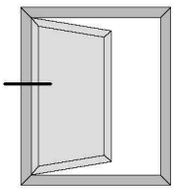

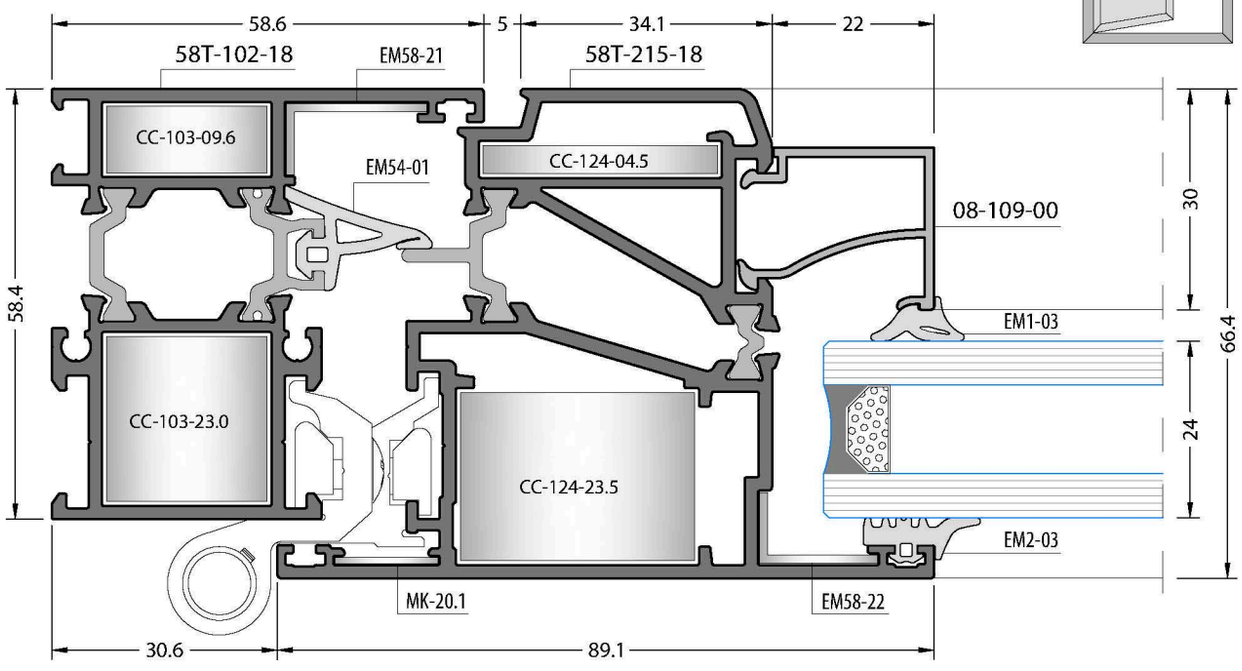

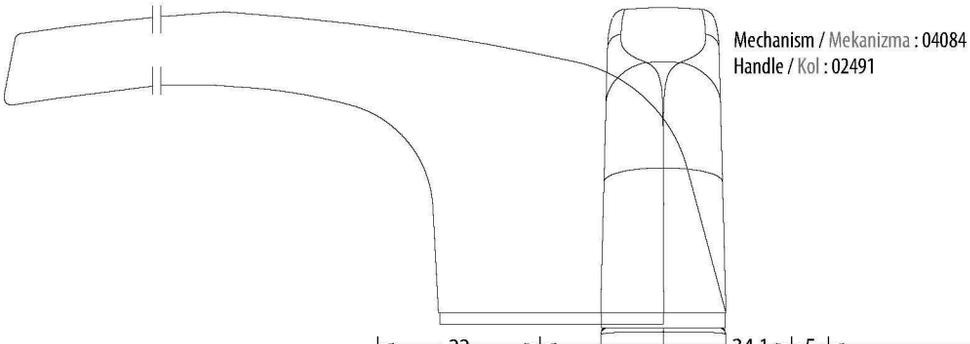

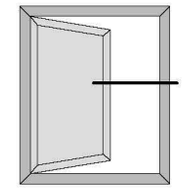

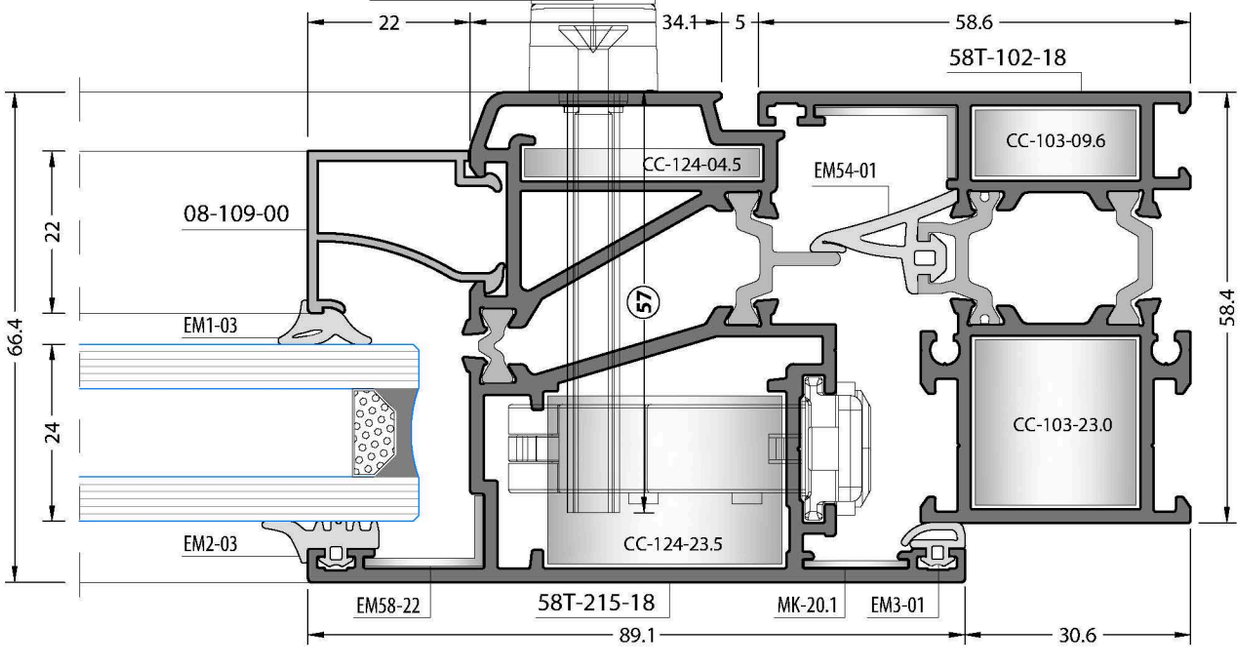

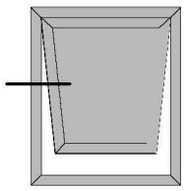

Exterior Window Sash Profile Details / Dışa Açılır Pencere Kanat Profil Detayları

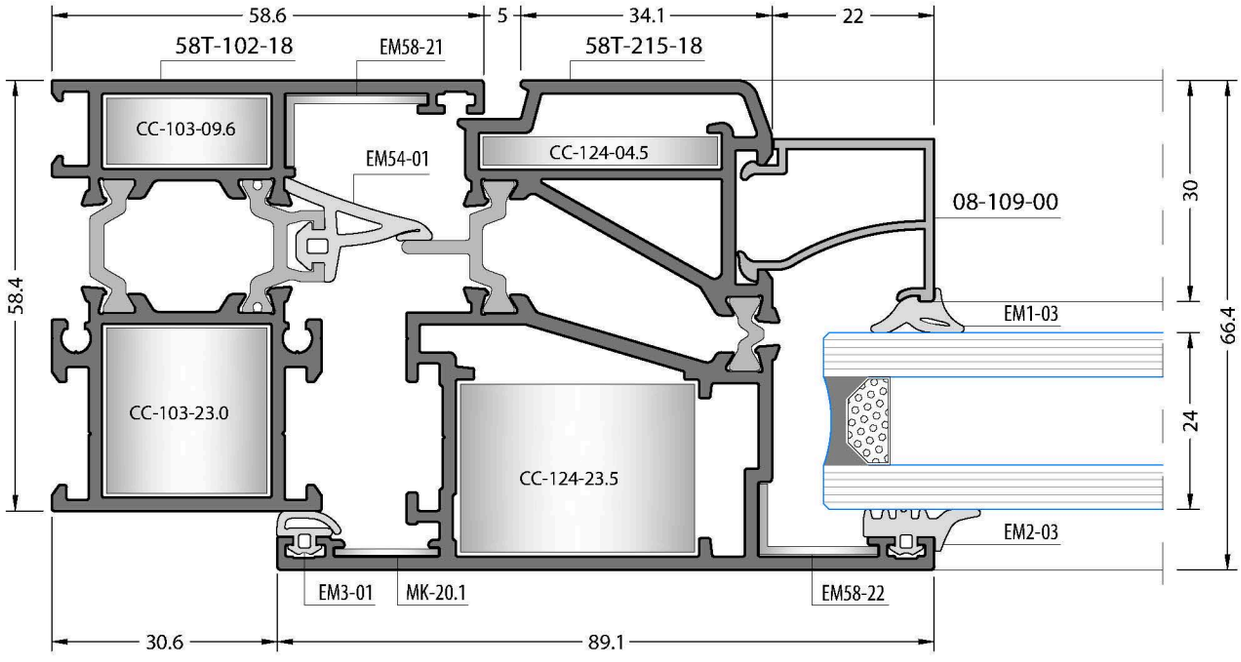

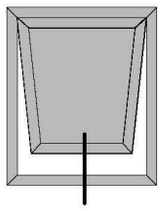

Exterior Window Sash Profile Details / Dışa Açılır Pencere Kanat Profil Detayları

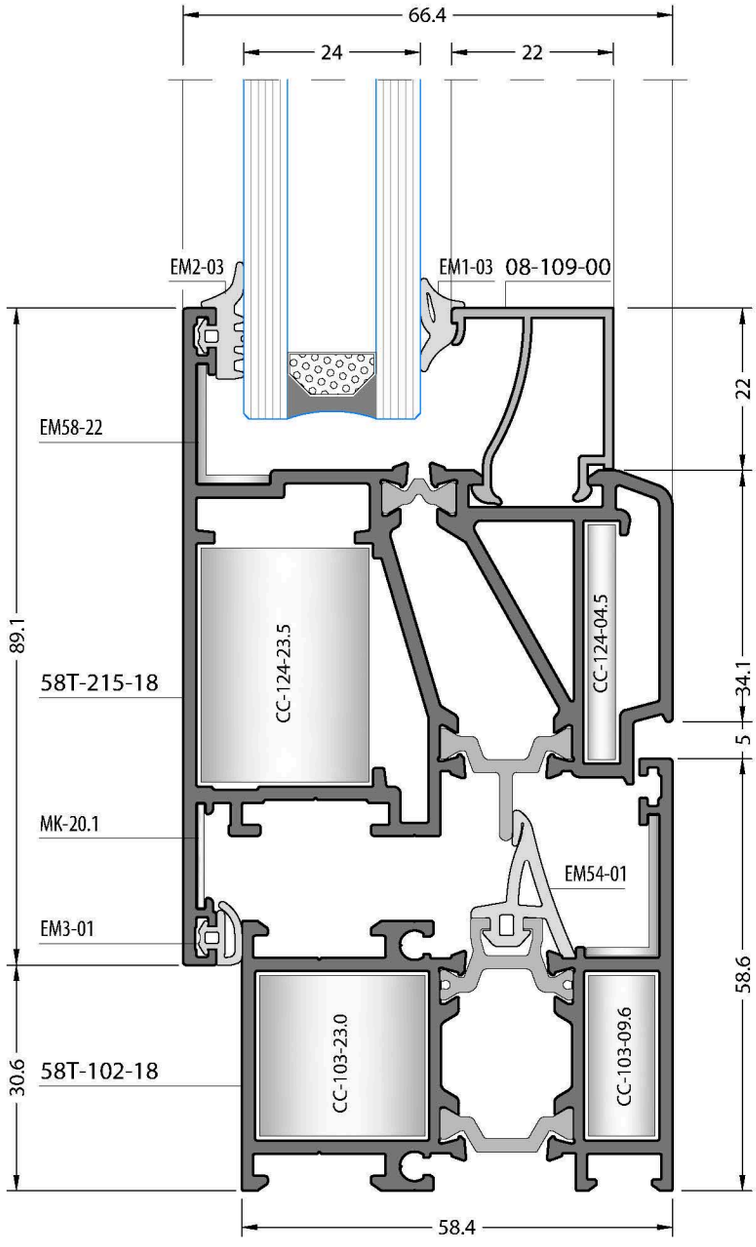

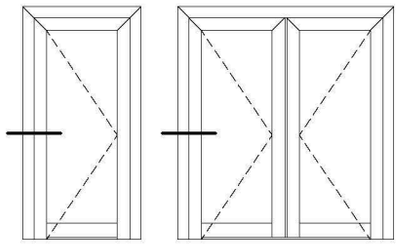

Inside Opening Door
İçe Açılır Kapı

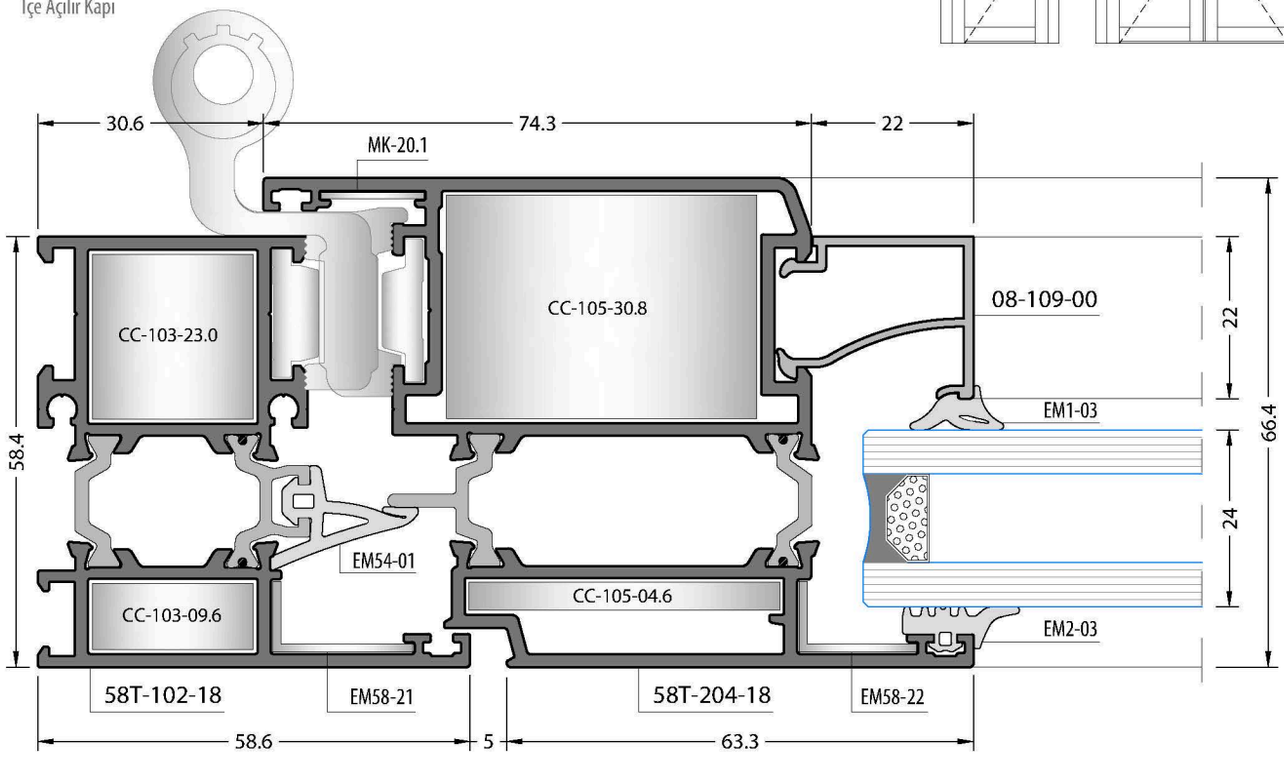

Inside Opening Door
İçe Açılır Kapı

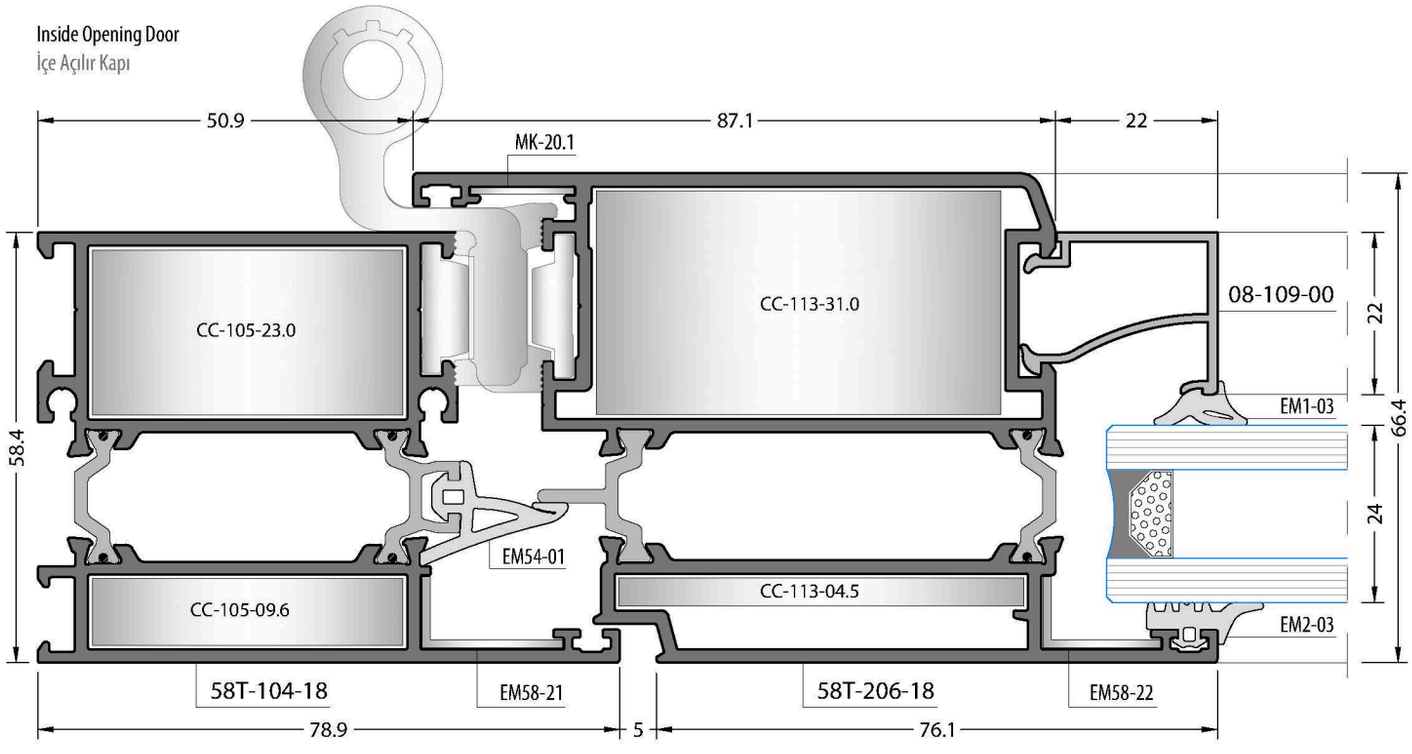

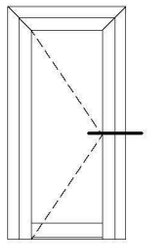

Inside Opening Door
İçe Açılır Kapı

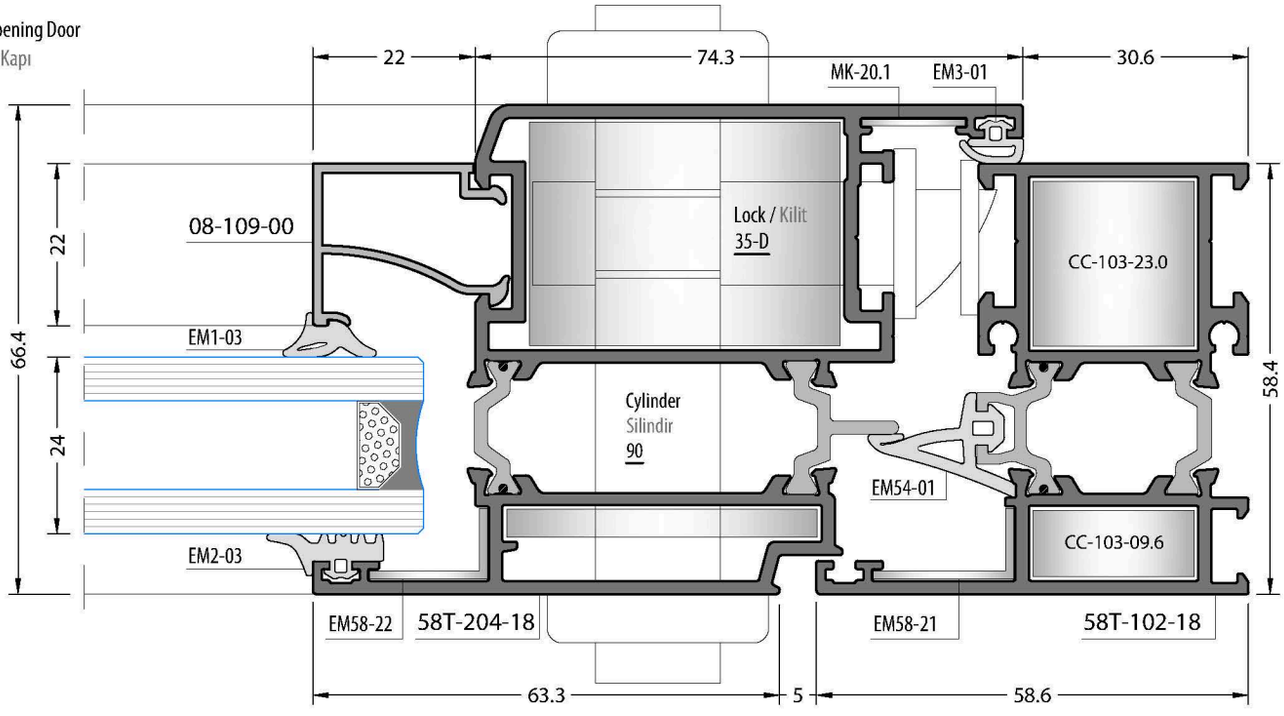

Inside Opening Door
İçe Açılır Kapı

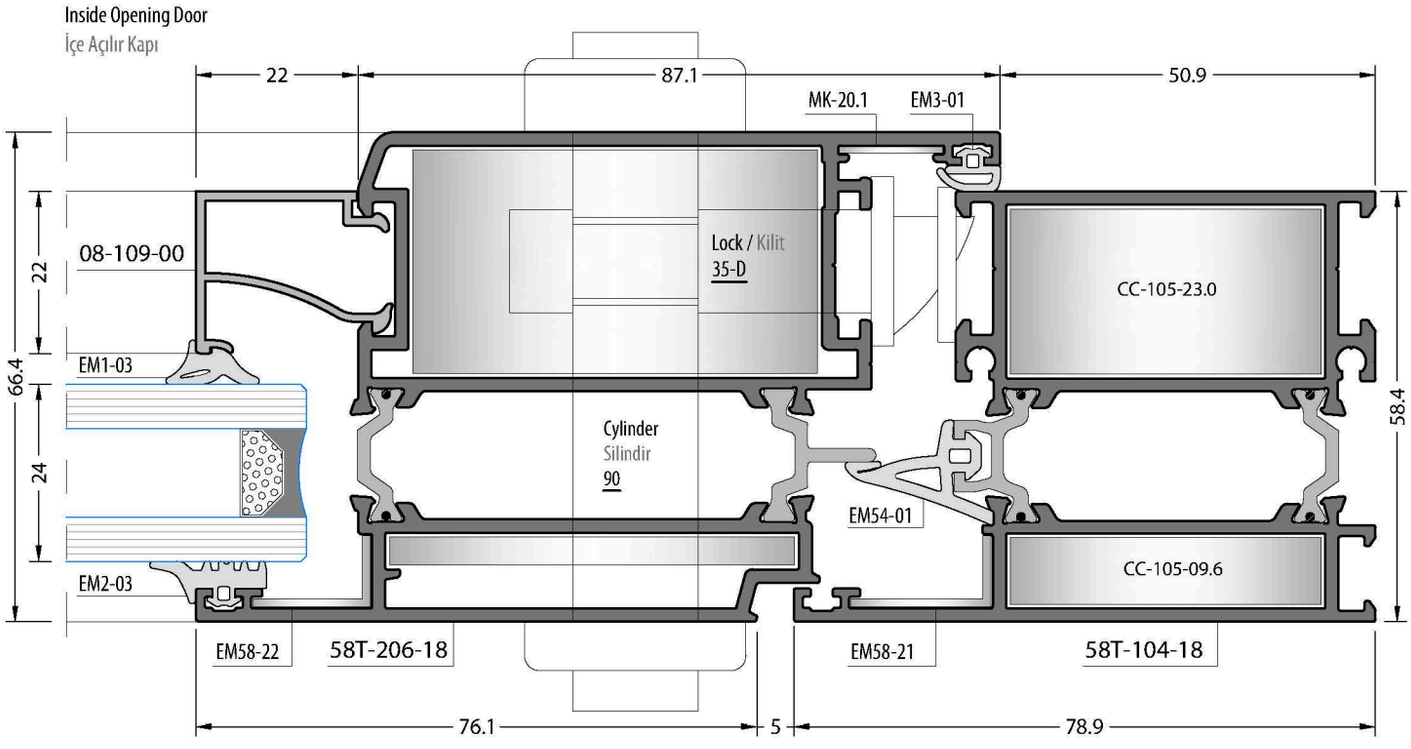

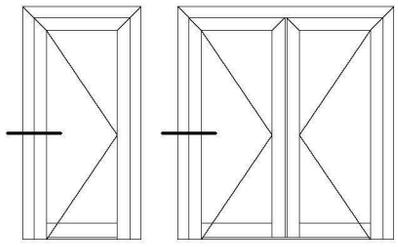

Outside Opening Door
Dışa Açılır Kapı

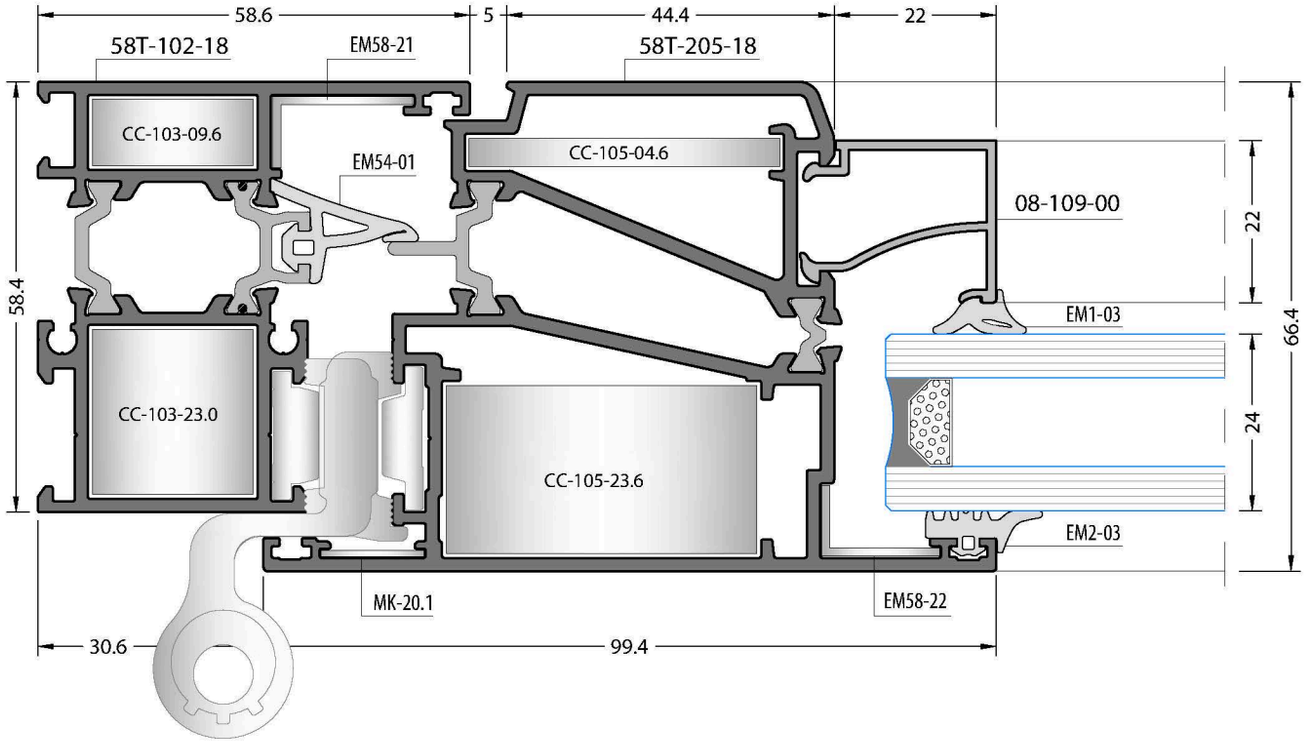

Outside Opening Door
Dışa Açılır Kapı

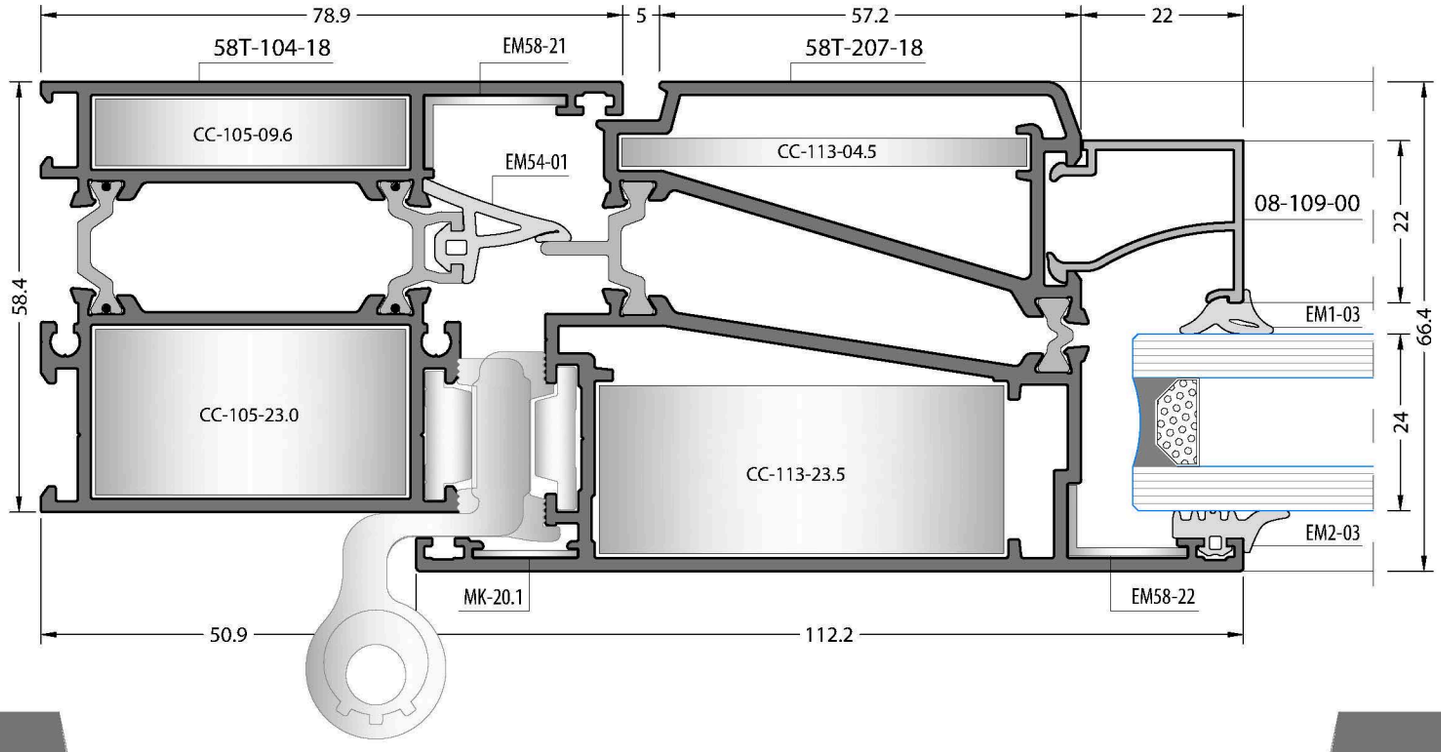

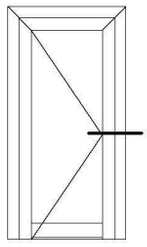

Outside Opening Door
Dışa Açılır Kapı

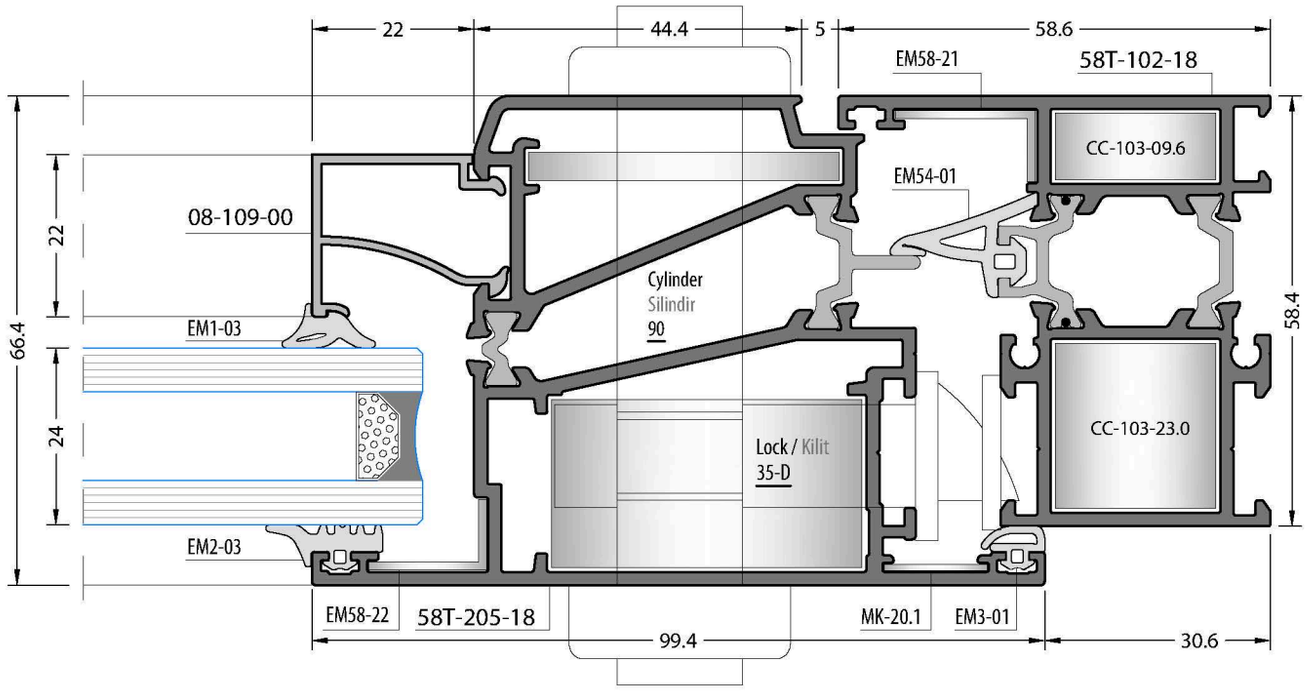

Outside Opening Door
Dışa Açılır Kapı

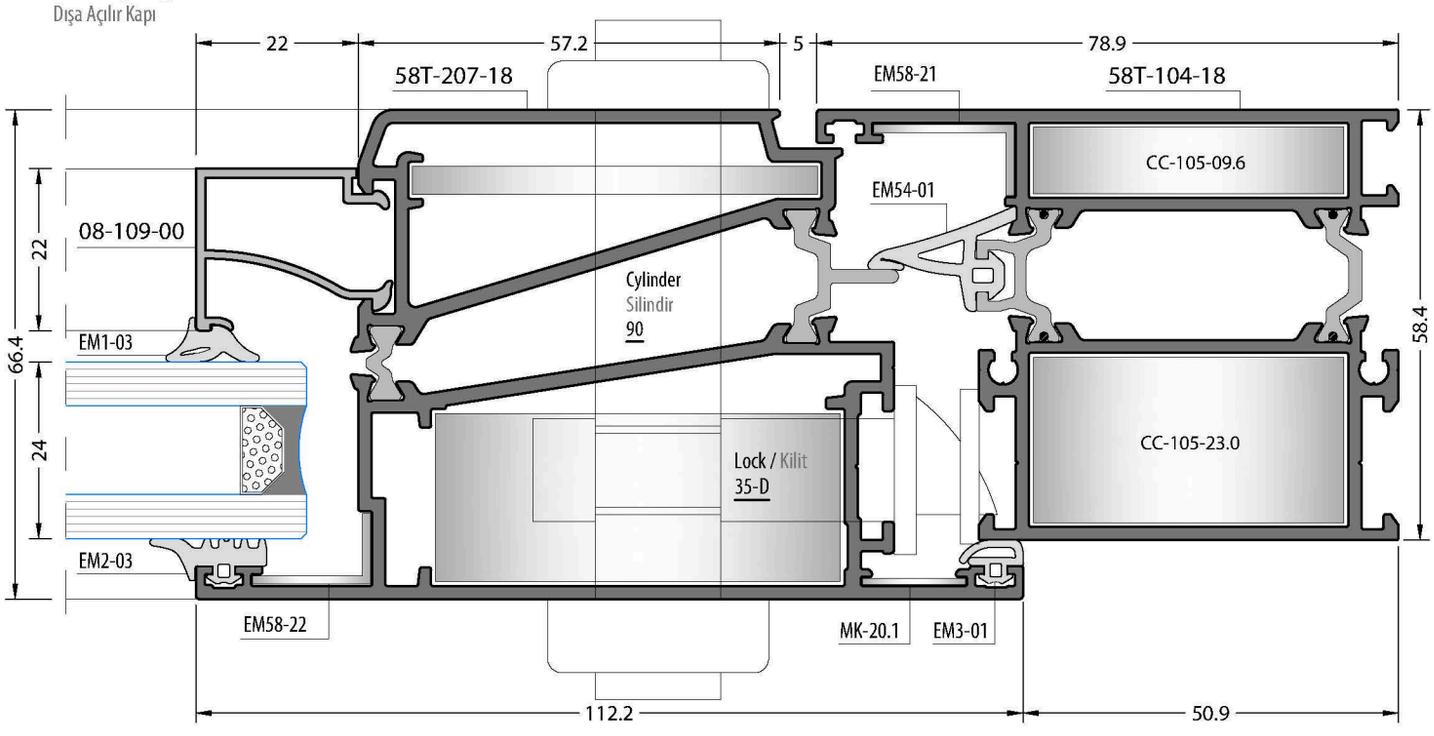

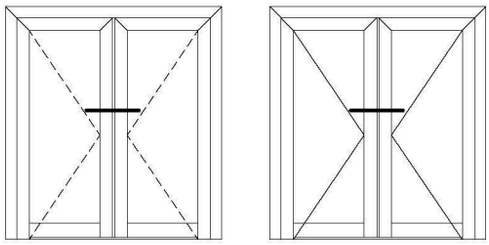

Inside Opening Door

İçe Açılır Kapı

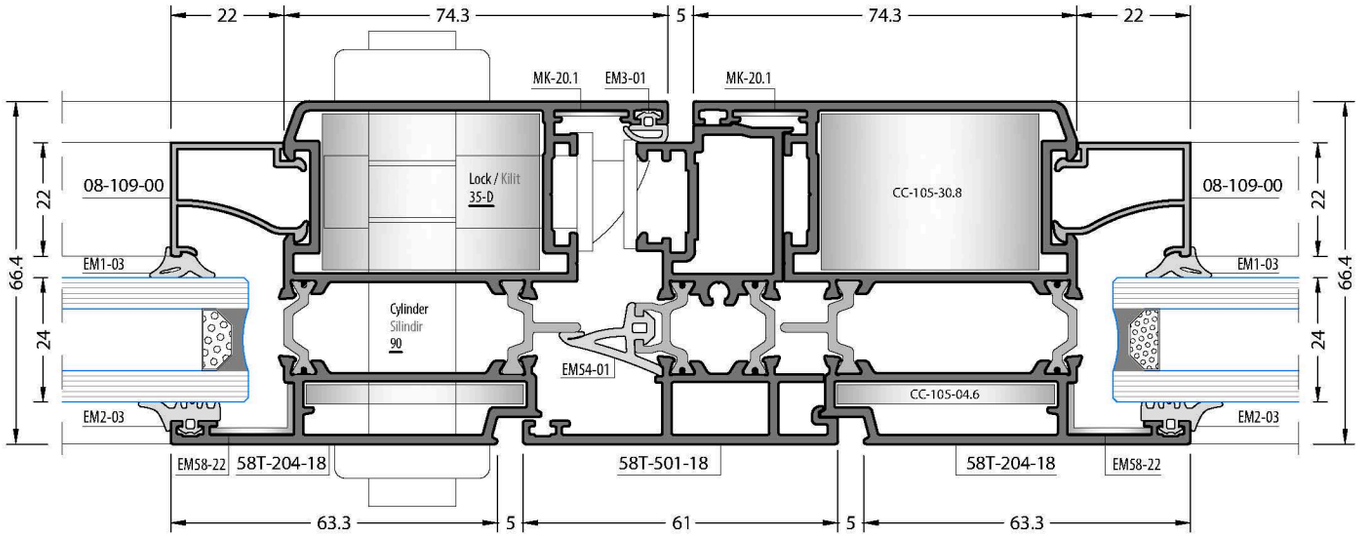

Outside Opening Door

Dışa Açılır Kapı

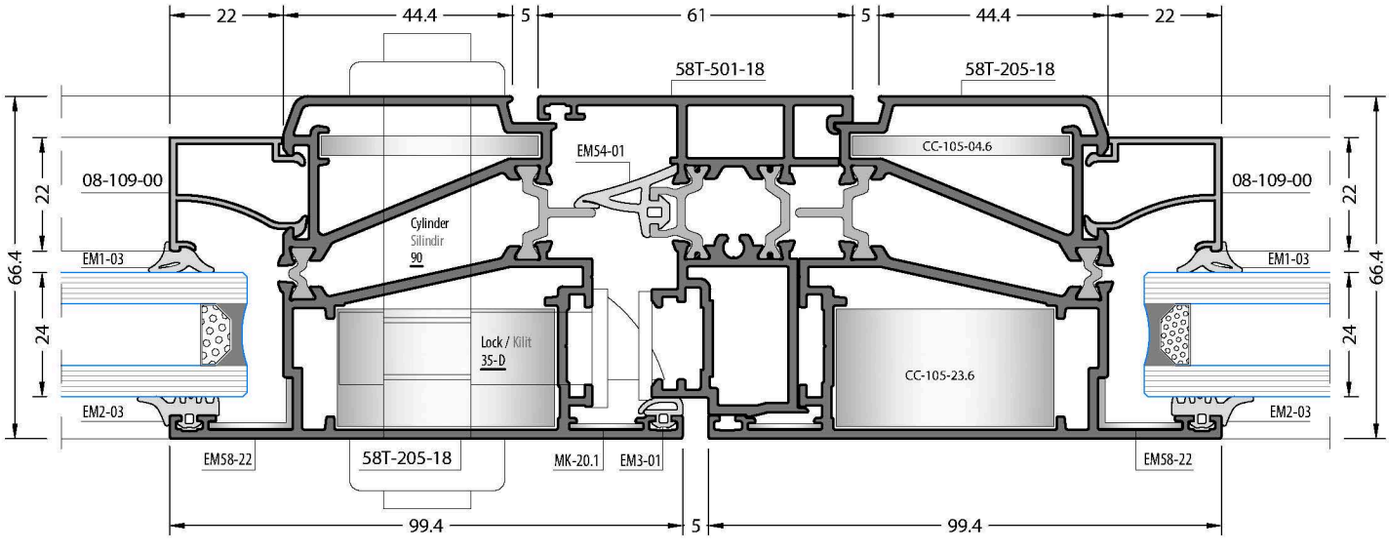

Not scaled / Ölçeksizdir

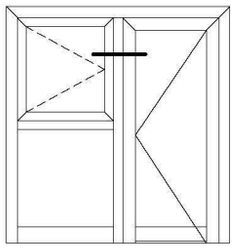

Inside Window and Outside Opening Door

İçe Açılır Pencere ve Dışa Açılır Kapı

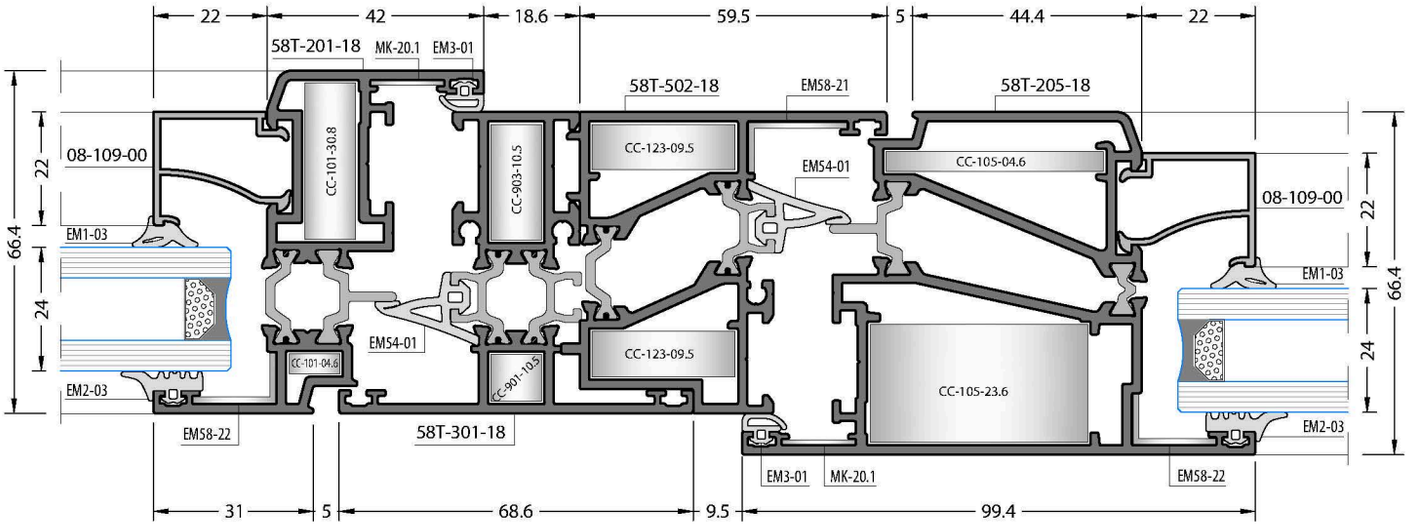

Not scaled / Ölçeksizdir

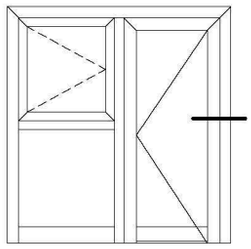

Inside Window and Outside Opening Door

İçe Açılır Pencere ve Dışa Açılır Kapı

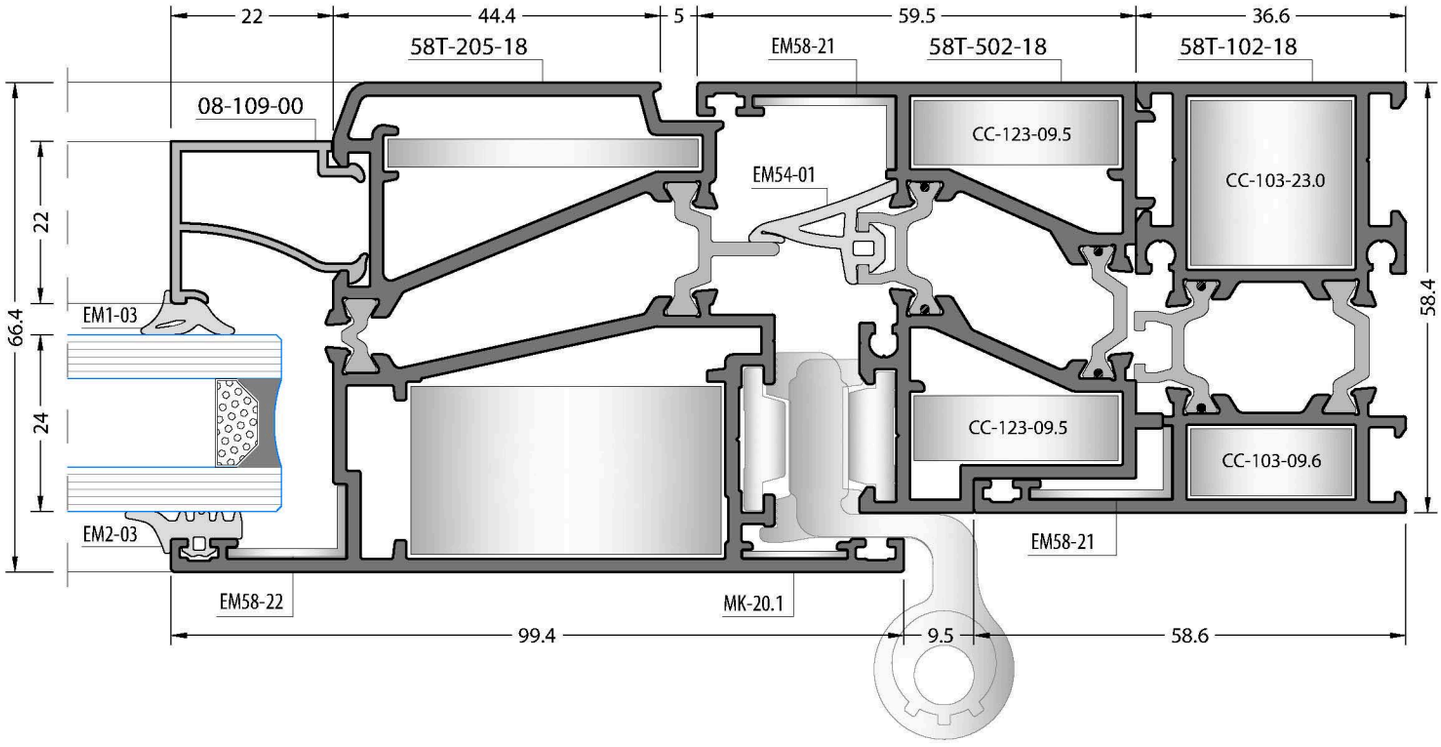

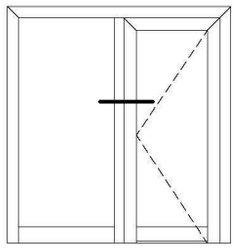

Inside Opening Door

İçe Açılır Kapı

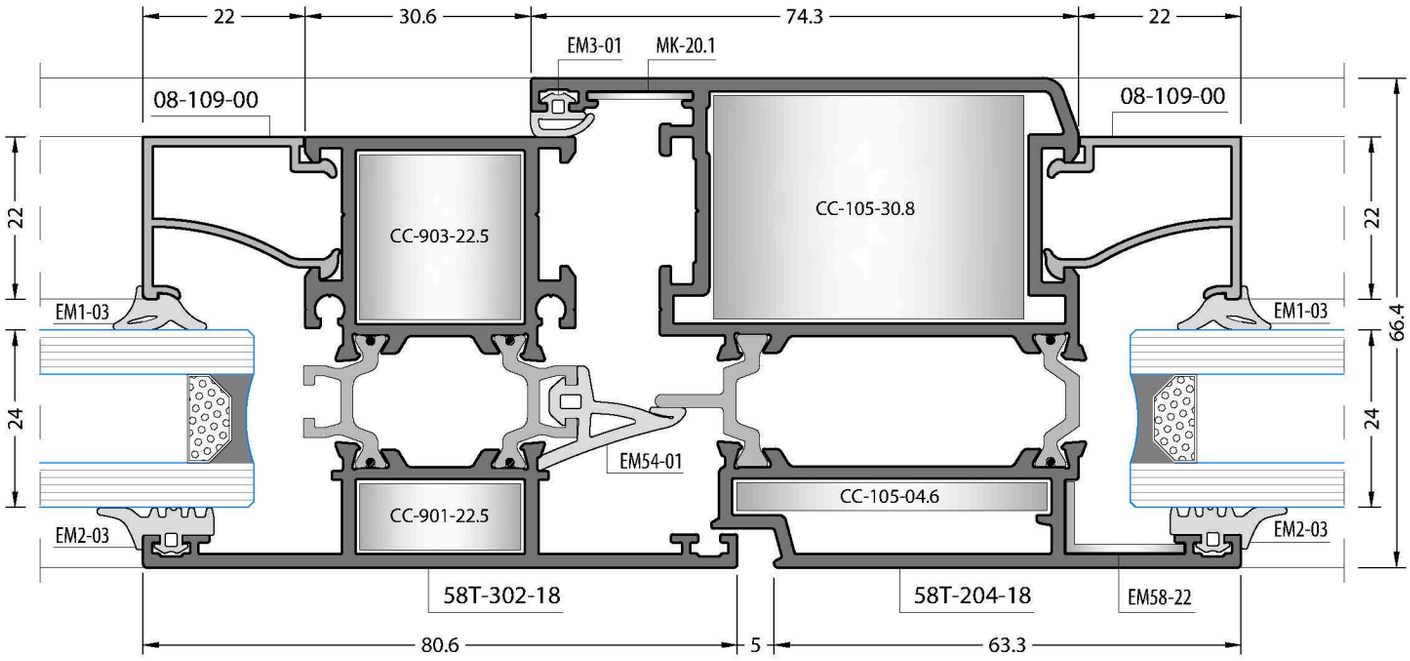

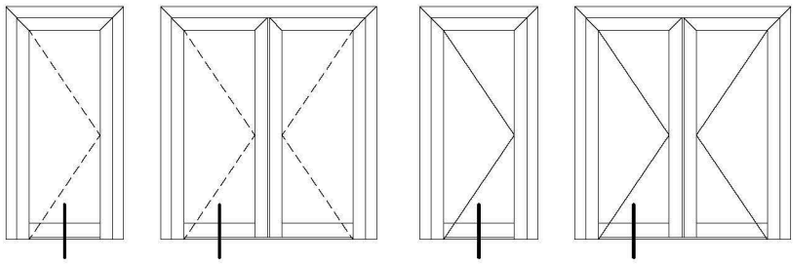

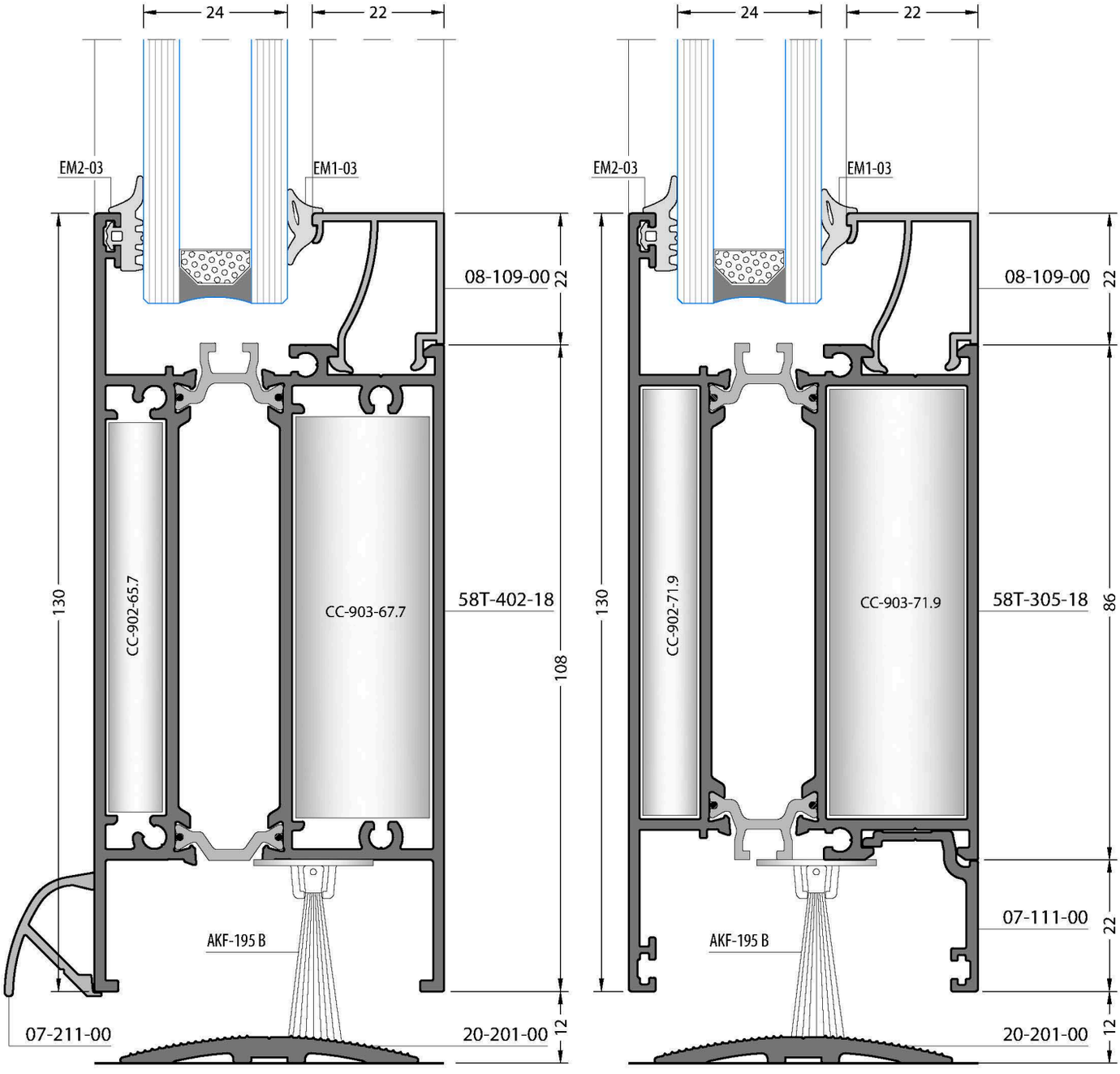
24
22
EM2-03
EM1-03
08-109-00
22
130
CC-902-65.7
CC-903-67.7
58T-402-18
108
AKF-195 B
07-211-00
20-201-00
12
24
22
EM2-03
EM1-03
08-109-00
22
130
CC-902-71.9
CC-903-71.9
58T-305-18
86
07-111-00
22
AKF-195 B
20-201-00
12

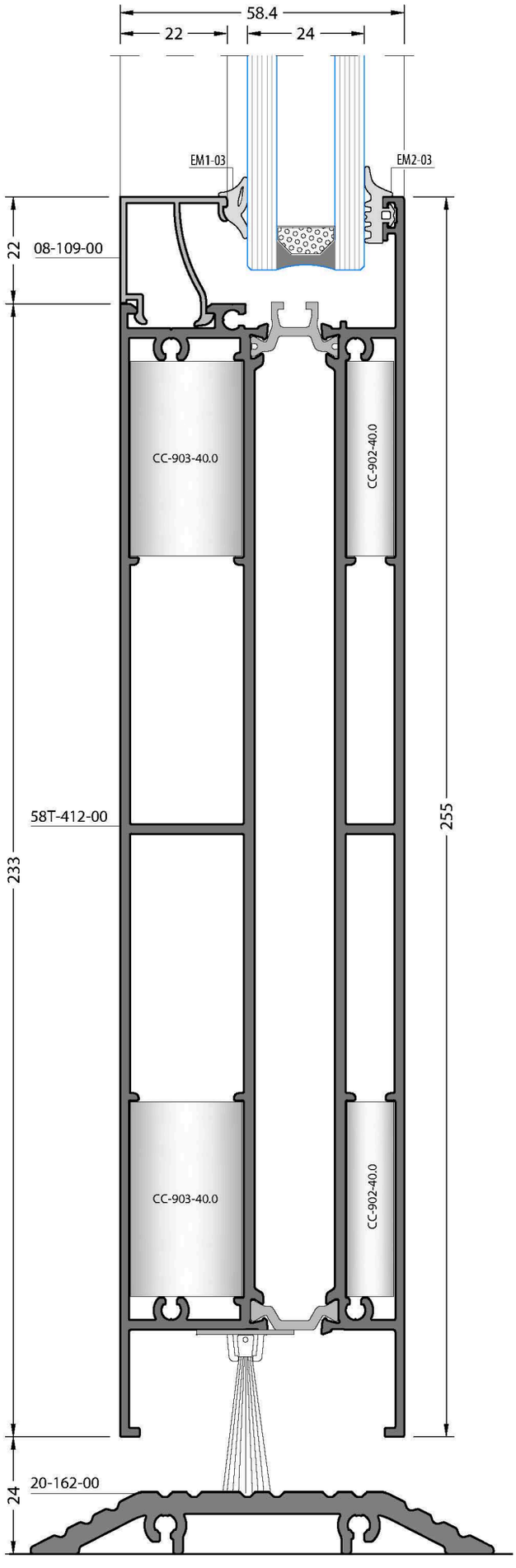

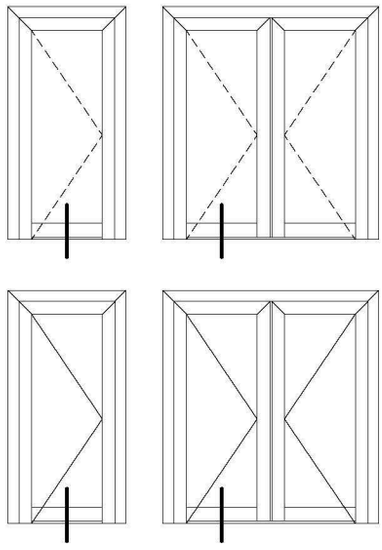

Not scaled / Ölçeksizdir

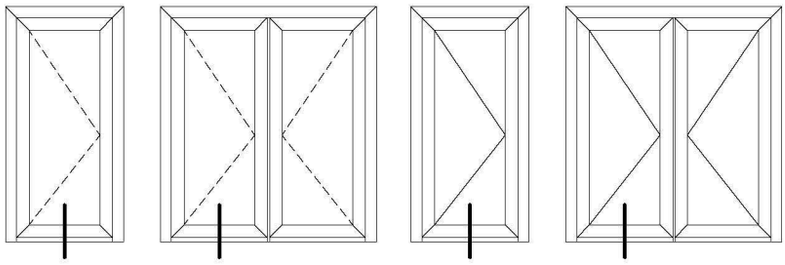

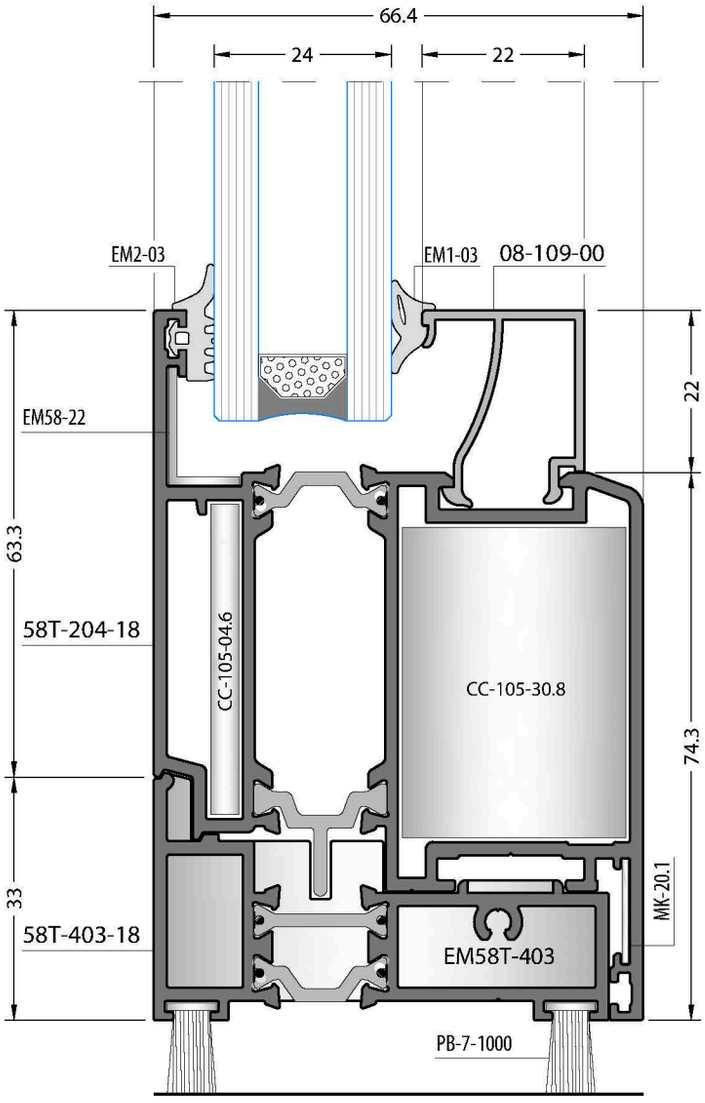
66.4
24
22
EM2-03
EM1-03
08-109-00
EM58-22
63.3
58T-204-18
CC-105-04.6
CC-105-30.8
22
74.3
33
58T-403-18
MK-20.1
EM58T-403
PB-7-1000

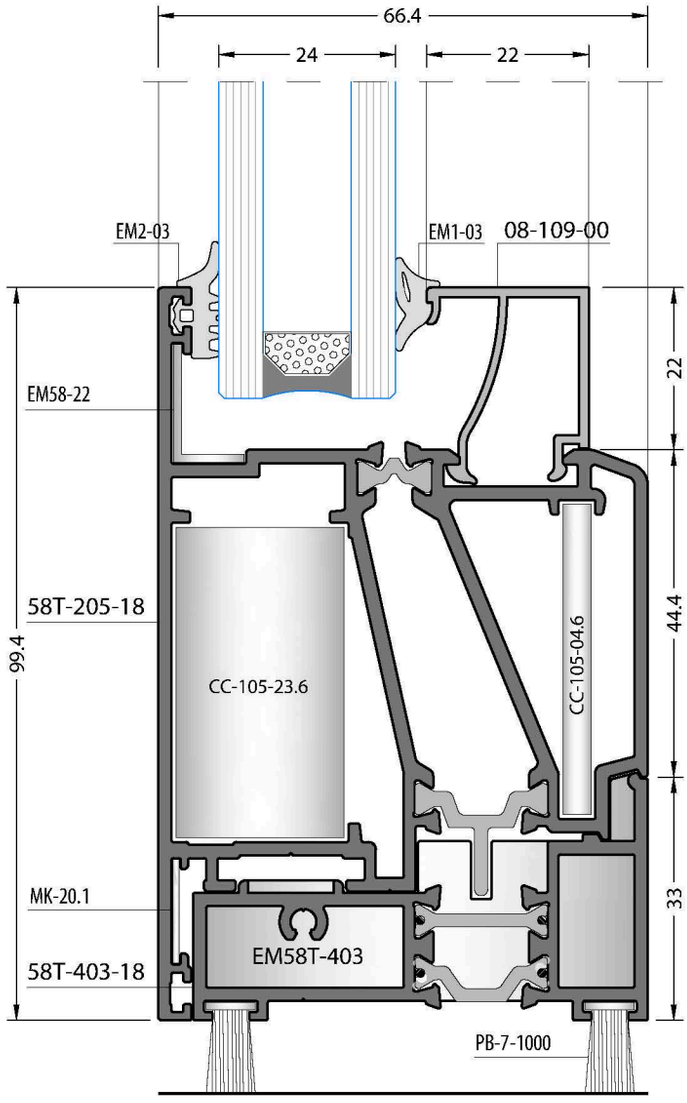
66.4
24
22
EM2-03
EM1-03
08-109-00
EM58-22
58T-205-18
99.4
CC-105-23.6
CC-105-04.6
22
44.4
33
MK-20.1
58T-403-18
EM58T-403
PB-7-1000

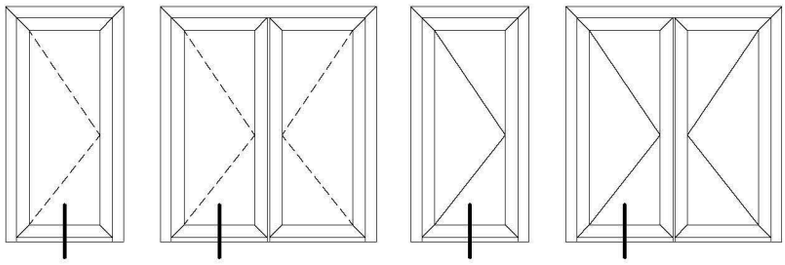

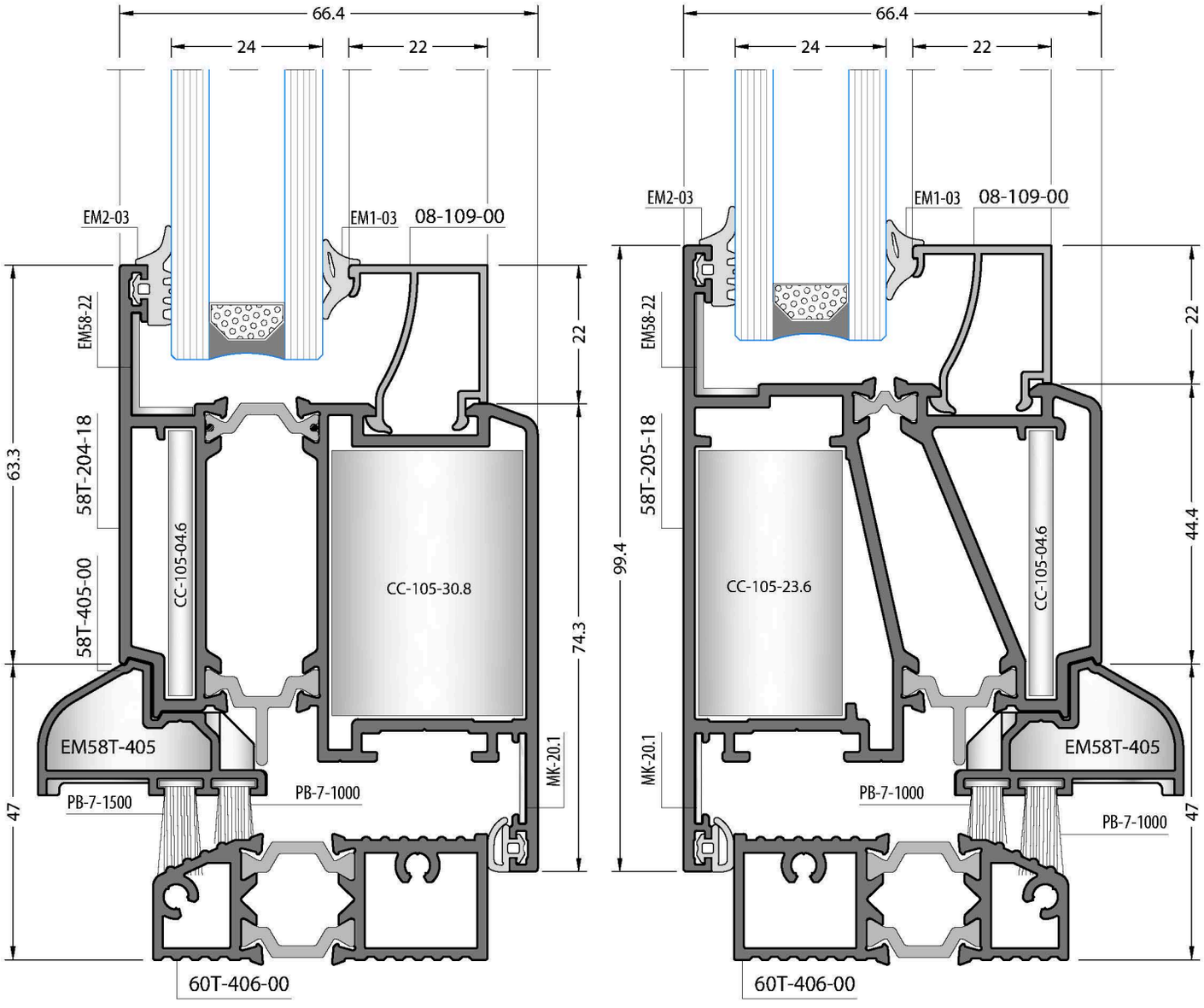
66.4
24
22
EM2-03
EM1-03
08-109-00
EM58-22
58T-204-18
58T-405-00
CC-105-04.6
CC-105-30.8
63.3
22
74.3
EM58T-405
PB-7-1500
PB-7-1000
MK-20.1
47
60T-406-00
66.4
24
22
EM2-03
EM1-03
08-109-00
EM58-22
58T-205-18
CC-105-04.6
CC-105-23.6
99.4
22
44.4
MK-20.1
EM58T-405
PB-7-1000
PB-7-1000
47
60T-406-00

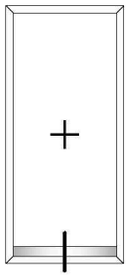

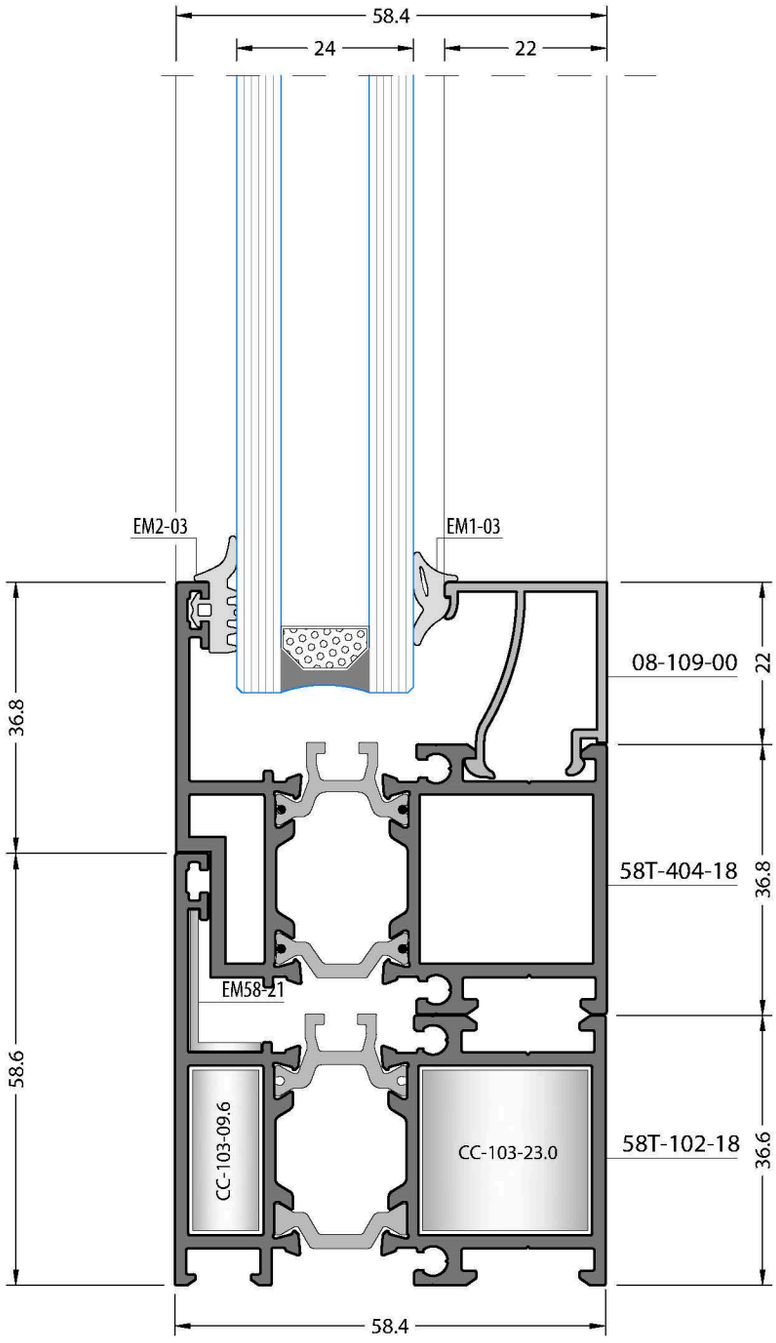
58.4
24
22
EM2-03
EM1-03
08-109-00
22
36.8
58T-404-18
36.8
EM58-21
58.6
CC-103-09.6
CC-103-23.0
58T-102-18
36.6
58.4

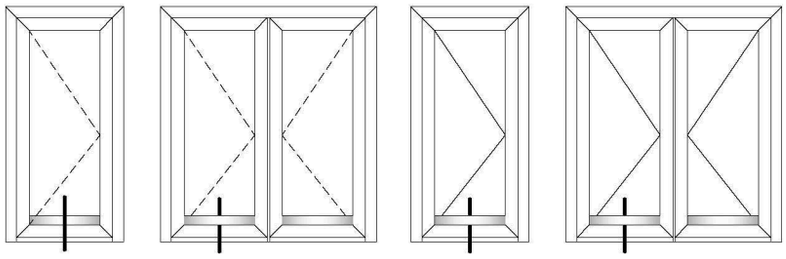

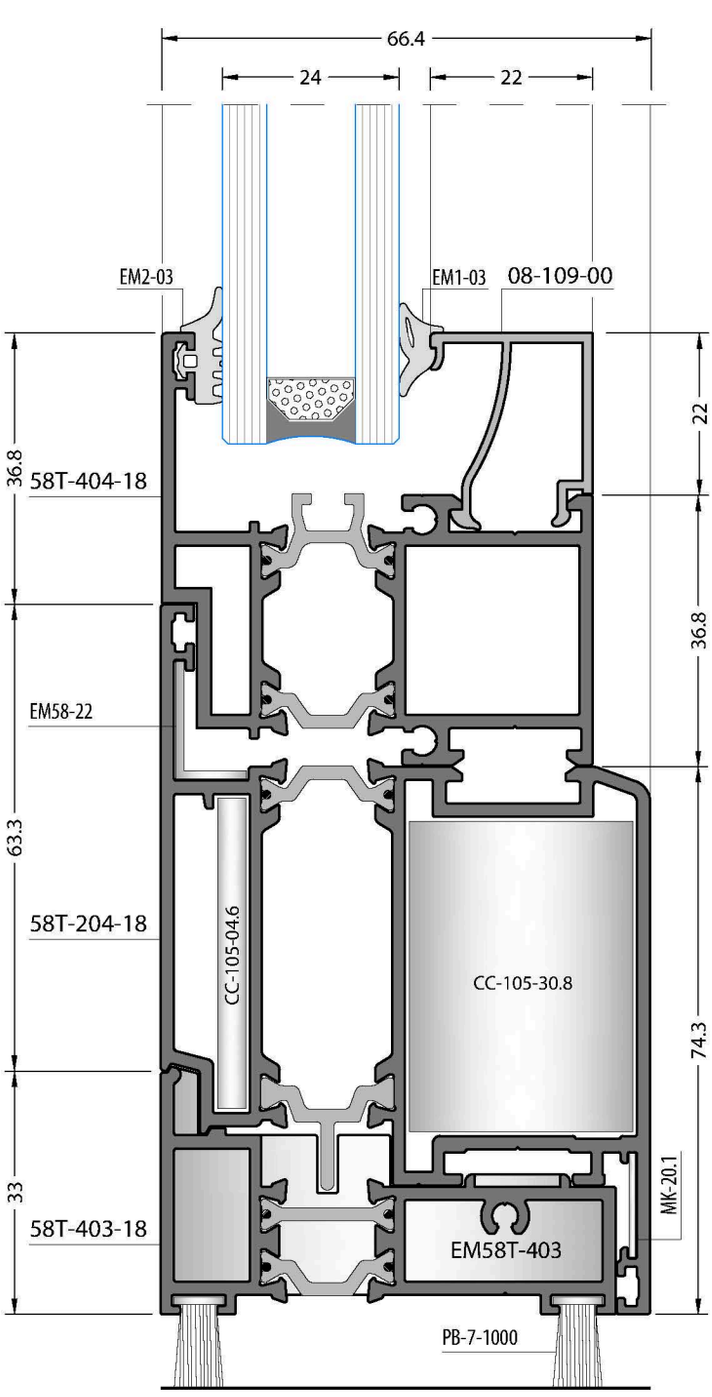
66.4
24
22
EM2-03
EM1-03
08-109-00
36.8
58T-404-18
63.3
EM58-22
58T-204-18
33
58T-403-18
22
36.8
74.3
CC-105-04.6
CC-105-30.8
MK-20.1
EM58T-403
PB-7-1000

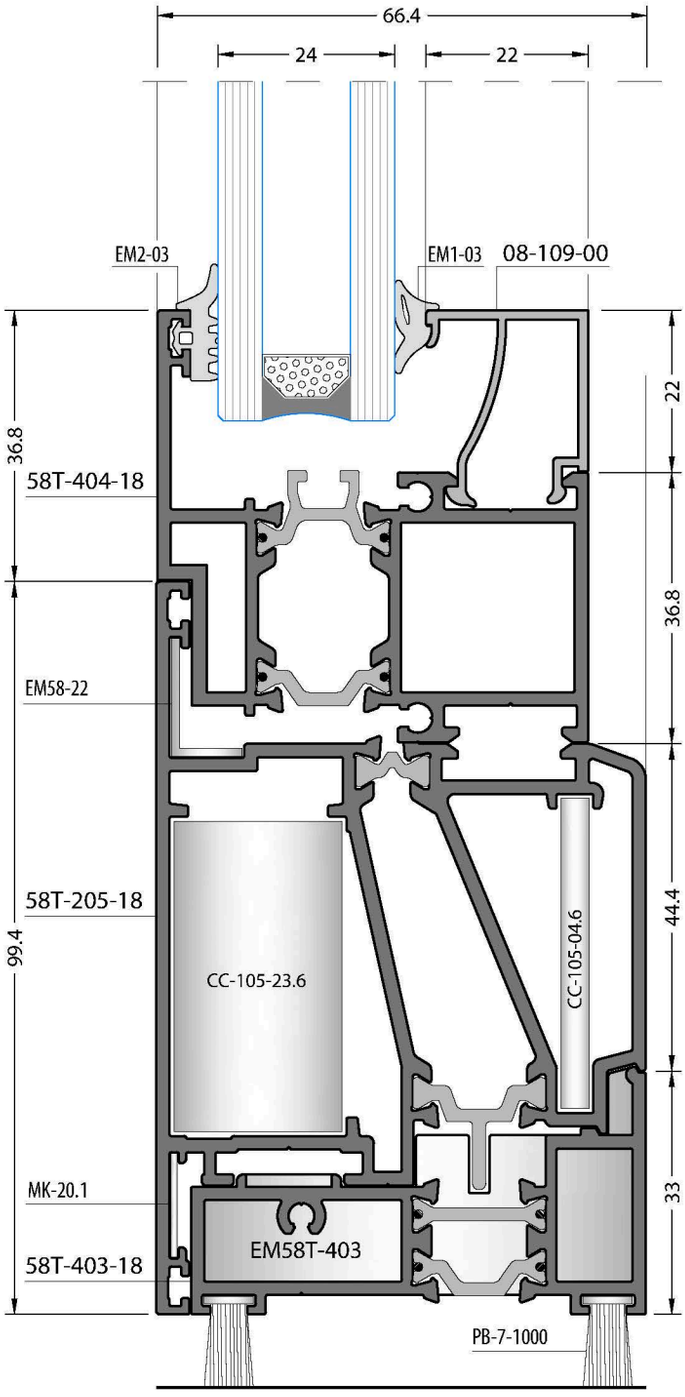
66.4
24
22
EM2-03
EM1-03
08-109-00
36.8
58T-404-18
EM58-22
58T-205-18
99.4
MK-20.1
58T-403-18
22
36.8
44.4
33
CC-105-23.6
CC-105-04.6
EM58T-403
PB-7-1000

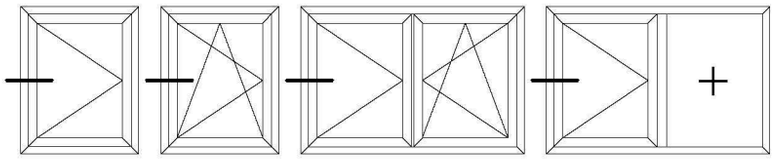

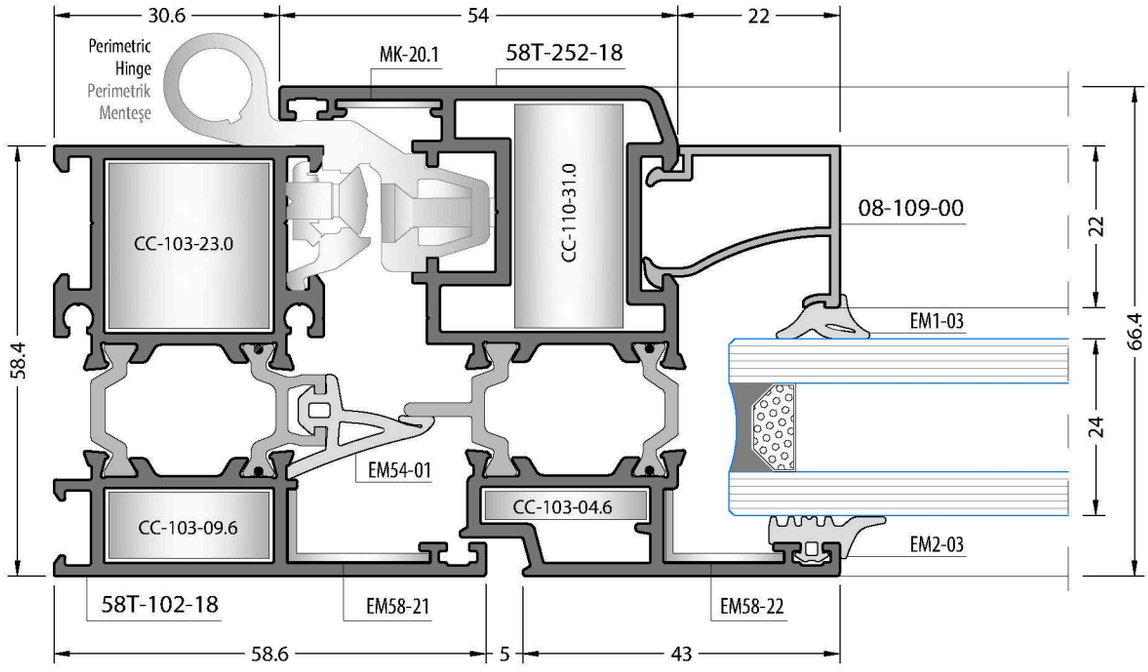
30.6
54
22
Perimetric
Hinge
Perimetrik
Menteşe
MK-20.1
58T-252-18
CC-103-23.0
CC-110-31.0
08-109-00
EM1-03
58.4
22
66.4
24
EM54-01
CC-103-09.6
CC-103-04.6
EM2-03
58T-102-18
EM58-21
EM58-22
58.6
5
43

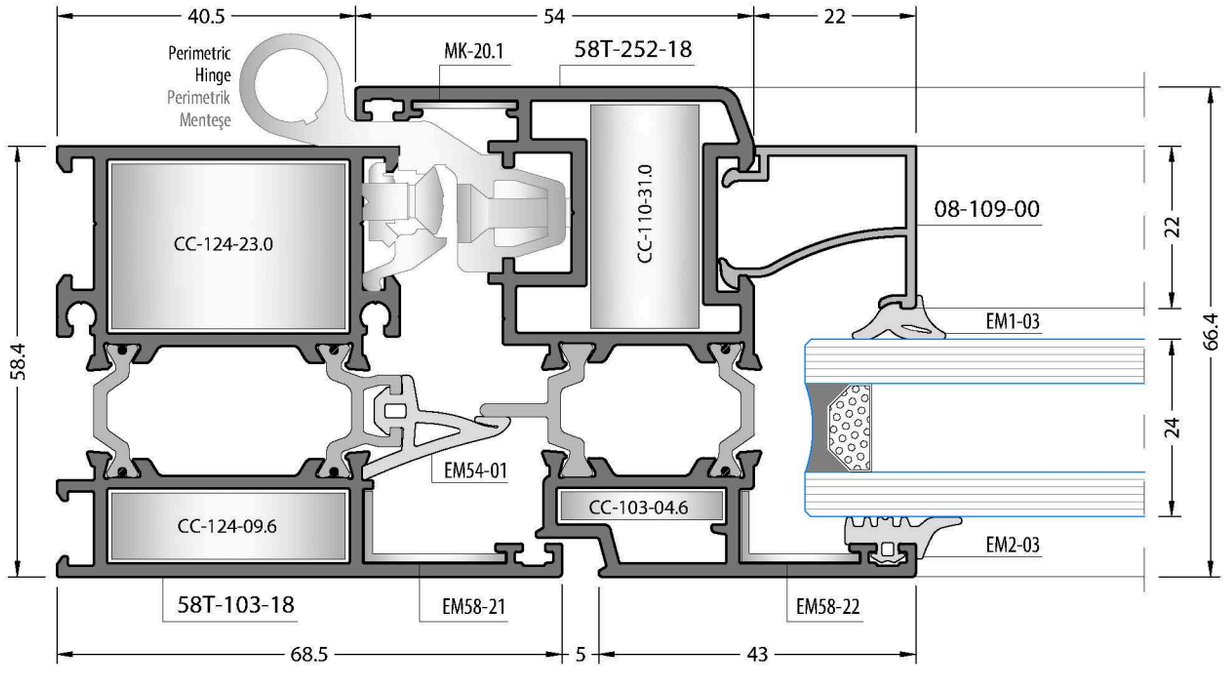
40.5
54
22
Perimetric
Hinge
Perimetrik
Menteşe
MK-20.1
58T-252-18
CC-124-23.0
CC-110-31.0
08-109-00
EM1-03
58.4
22
66.4
24
EM54-01
CC-124-09.6
CC-103-04.6
EM2-03
58T-103-18
EM58-21
EM58-22
68.5
5
43

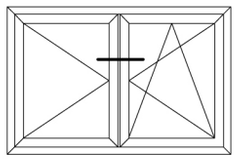

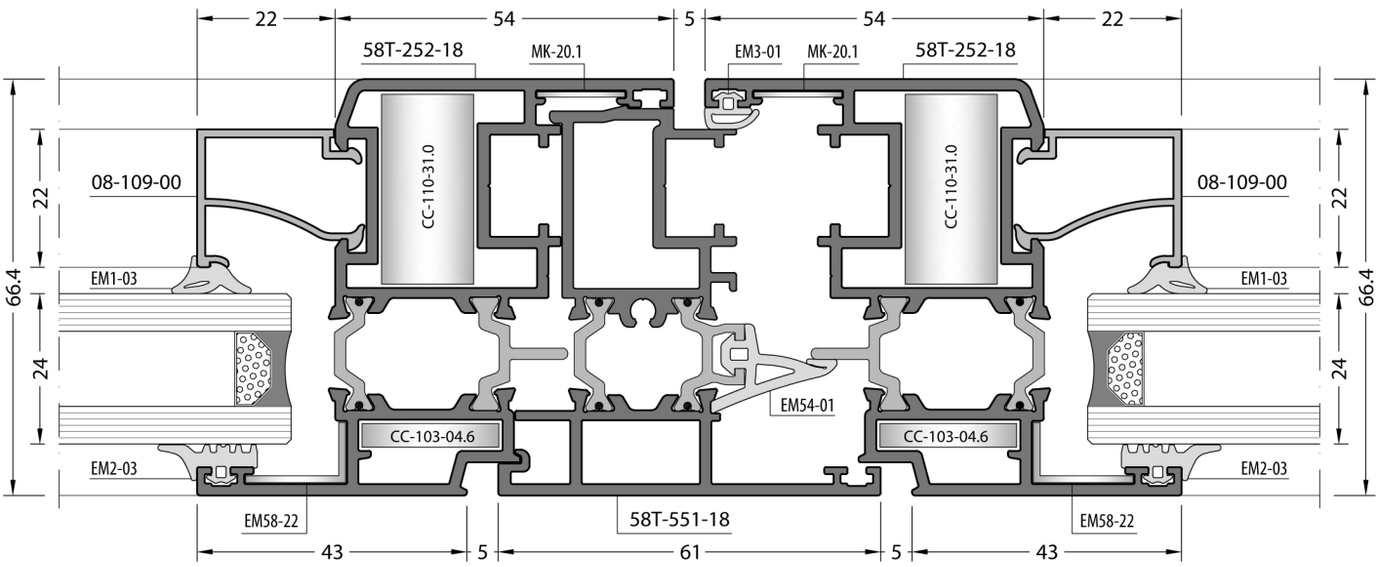

Not scaled / Ölçeksizdir

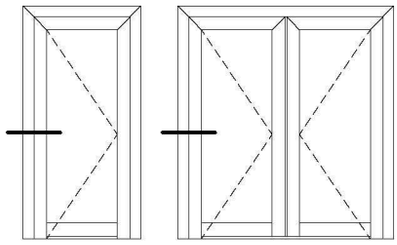

Inside Opening Door
İçe Açılır Kapı

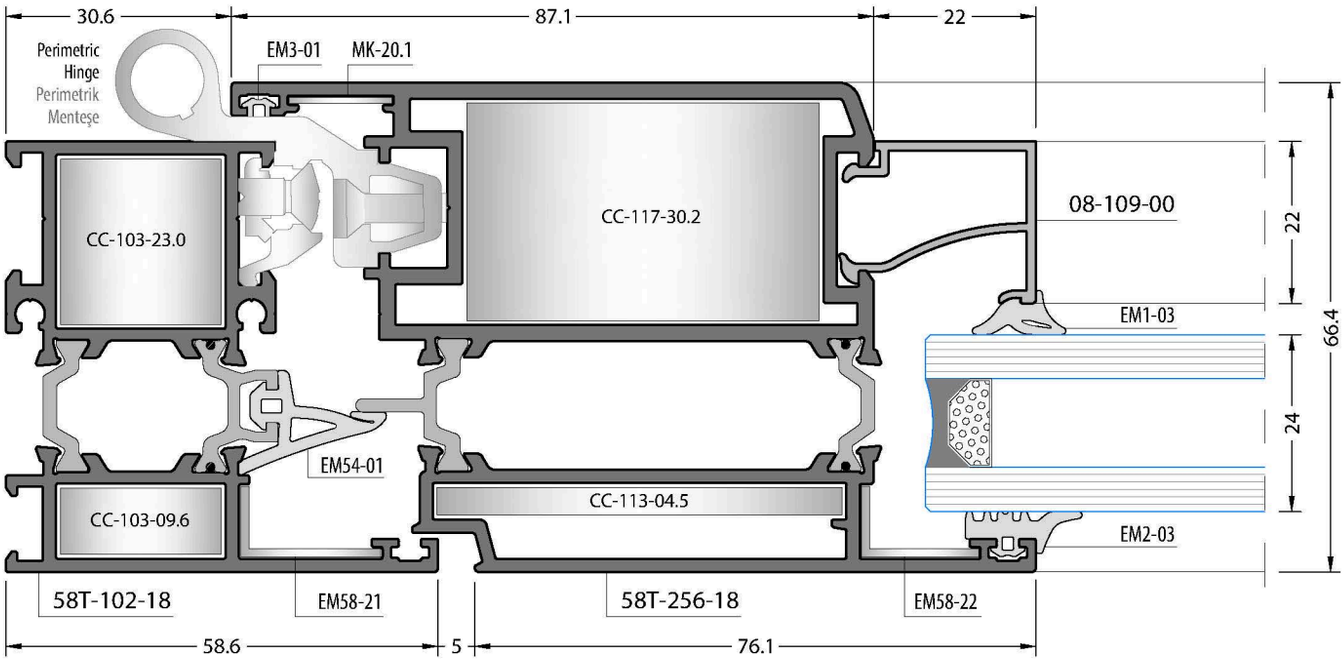

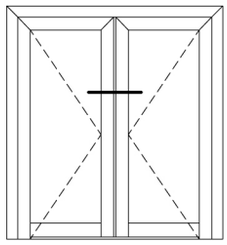

Inside Opening Door
İçe Açılır Kapı

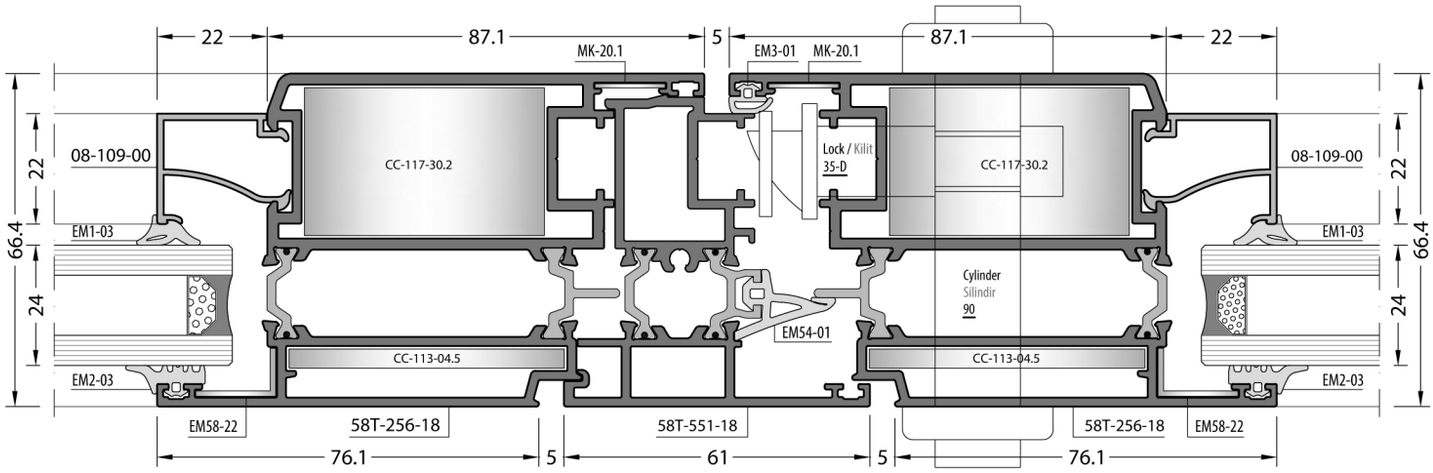

Not scaled / Ölçeksizdir

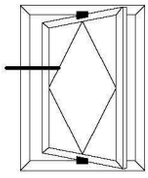

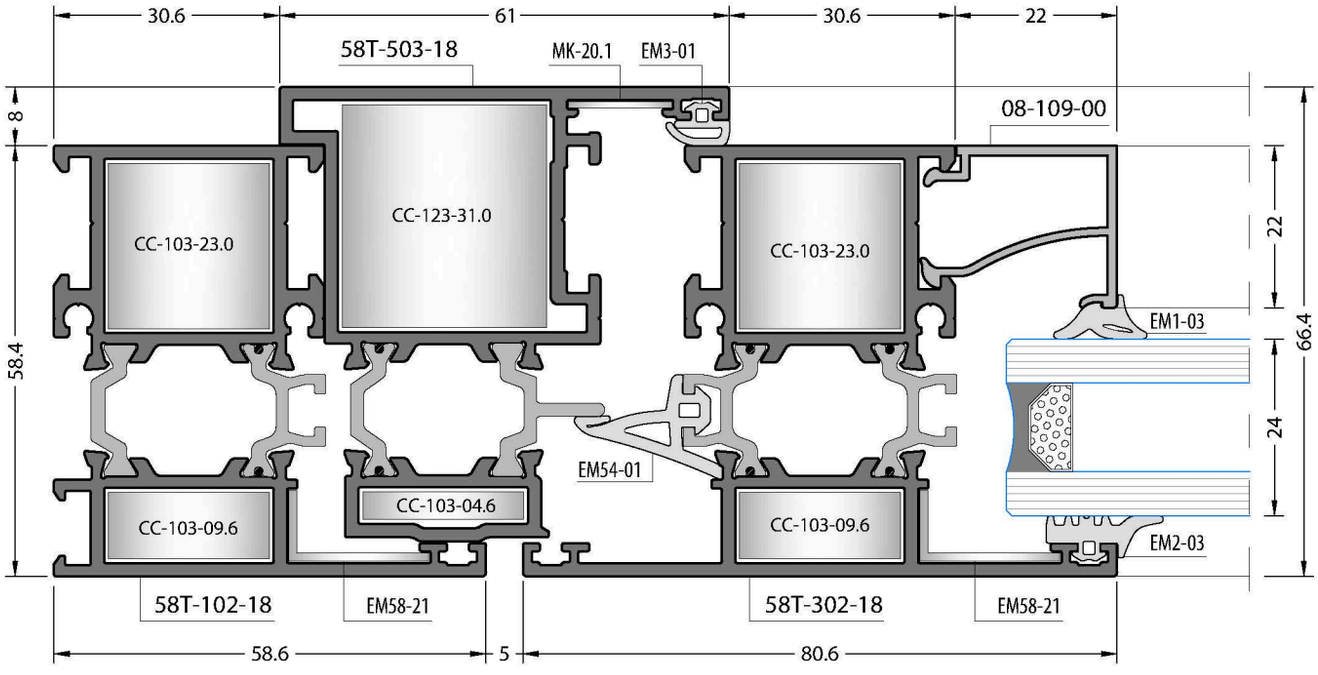
30.6
61
30.6
22
58T-503-18
MK-20.1
EM3-01
08-109-00
8
58.4
CC-103-23.0
CC-123-31.0
CC-103-23.0
22
66.4
EM1-03
24
EM54-01
CC-103-04.6
CC-103-09.6
CC-103-09.6
EM2-03
58T-102-18
EM58-21
58T-302-18
EM58-21
58.6
5
80.6

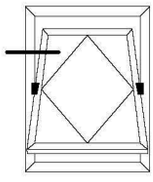

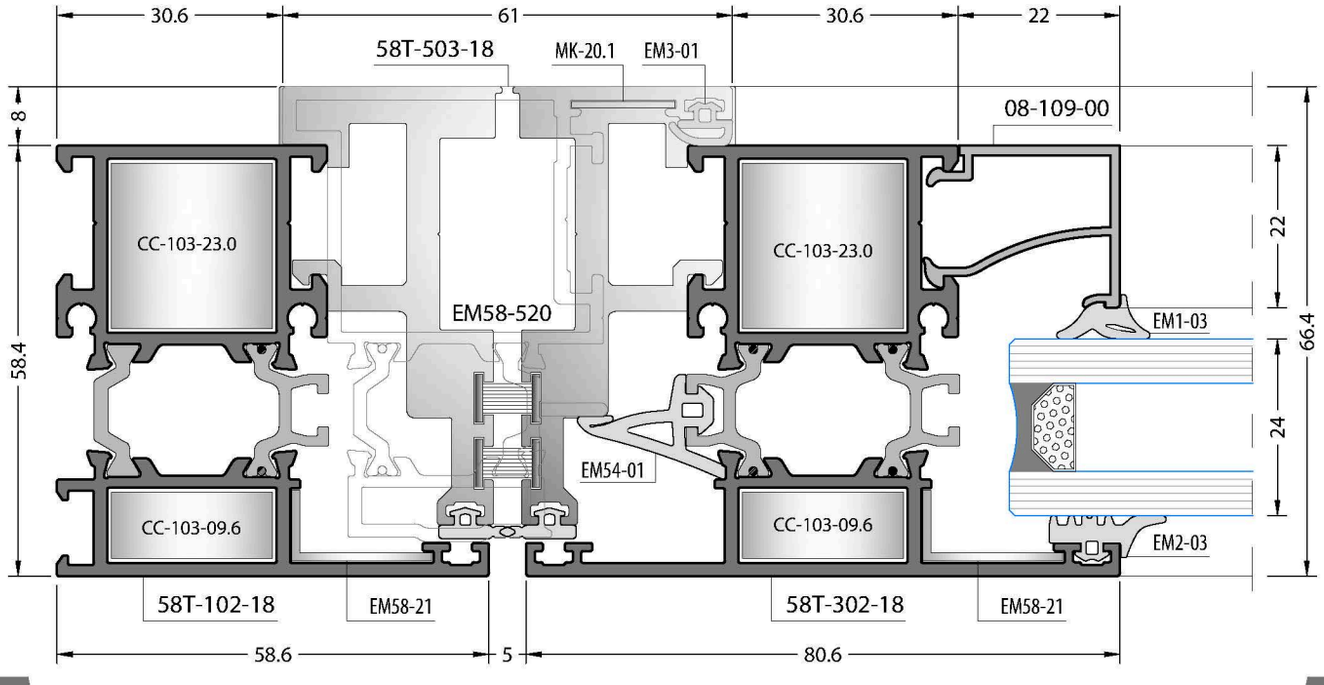
30.6
61
30.6
22
58T-503-18
MK-20.1
EM3-01
08-109-00
8
58.4
CC-103-23.0
EM58-520
CC-103-23.0
22
66.4
EM1-03
24
EM54-01
CC-103-09.6
CC-103-09.6
EM2-03
58T-102-18
EM58-21
58T-302-18
EM58-21
58.6
5
80.6

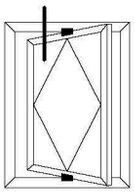

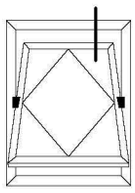

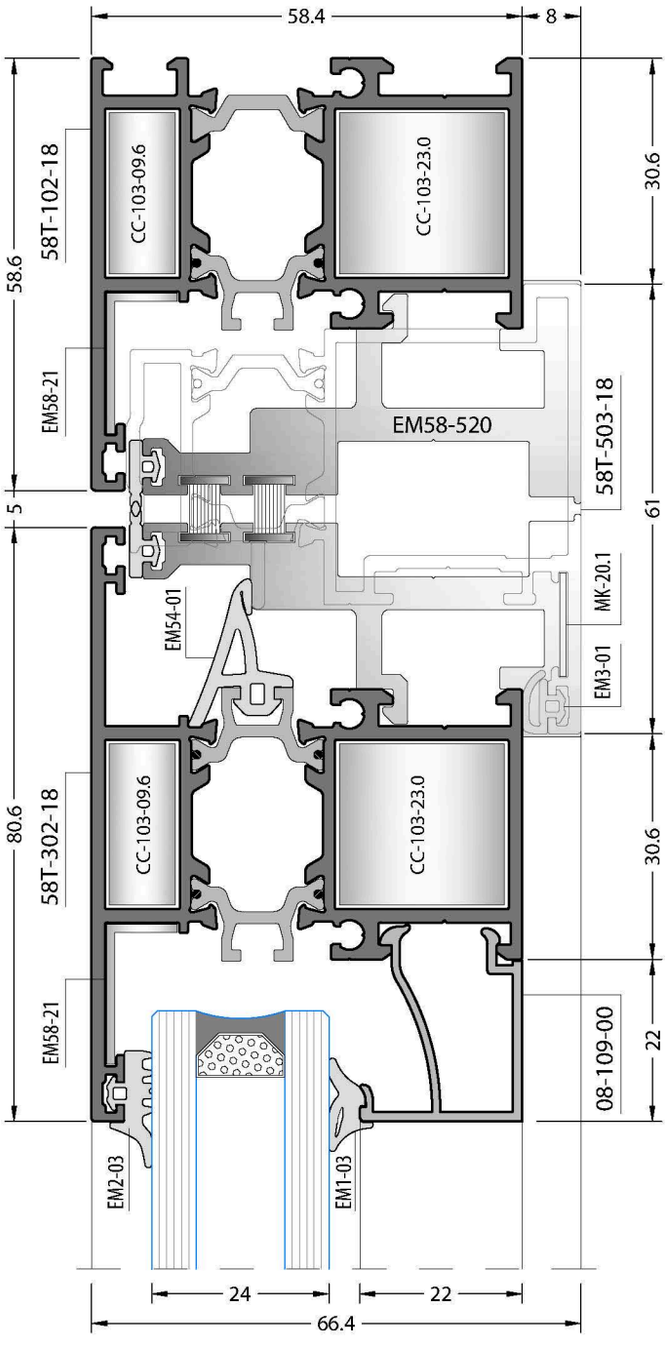
58.4
8
58.6
58T-102-18
CC-103-09.6
CC-103-23.0
30.6
EM58-21
EM58-520
58T-503-18
5
61
EM54-01
MK-20.1
EM3-01
80.6
58T-302-18
CC-103-09.6
CC-103-23.0
30.6
EM58-21
08-109-00
22
EM2-03
EM1-03
24
22
66.4

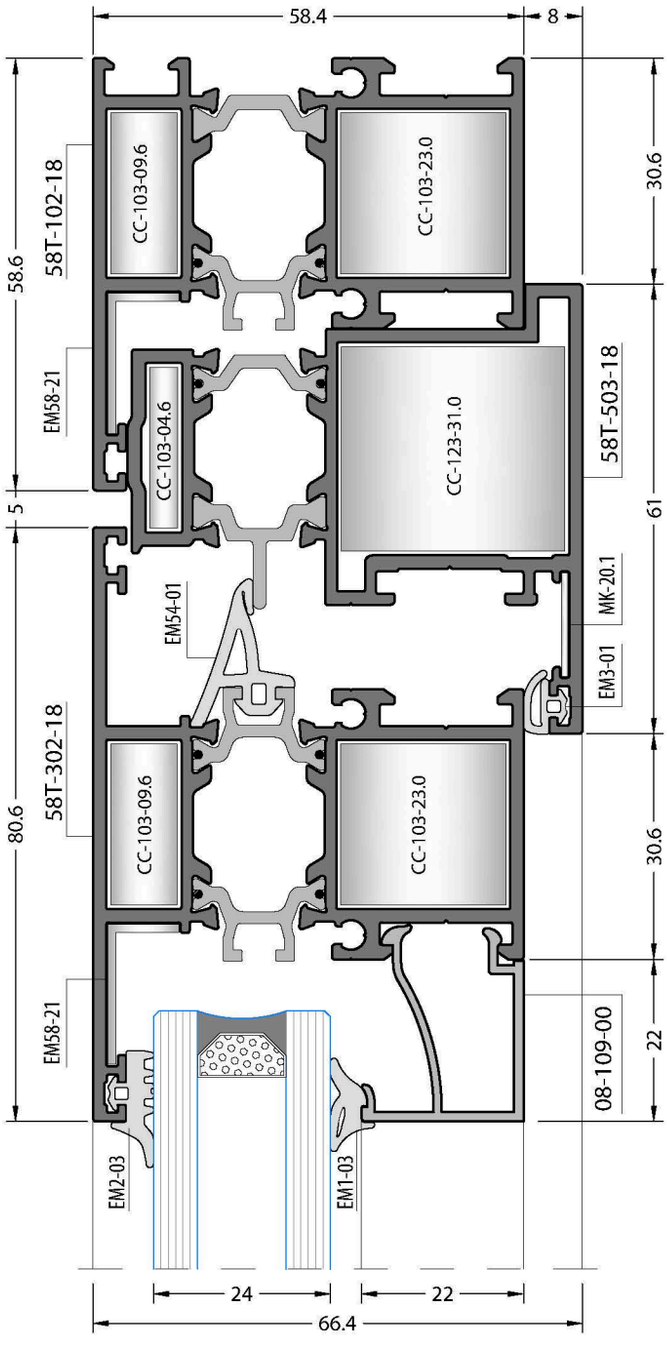
58.4
8
58.6
58T-102-18
CC-103-09.6
CC-103-23.0
30.6
EM58-21
CC-103-04.6
CC-123-31.0
58T-503-18
5
61
EM54-01
MK-20.1
EM3-01
80.6
58T-302-18
CC-103-09.6
CC-103-23.0
30.6
EM58-21
08-109-00
22
EM2-03
EM1-03
24
22
66.4

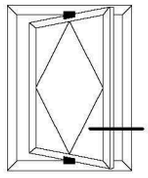

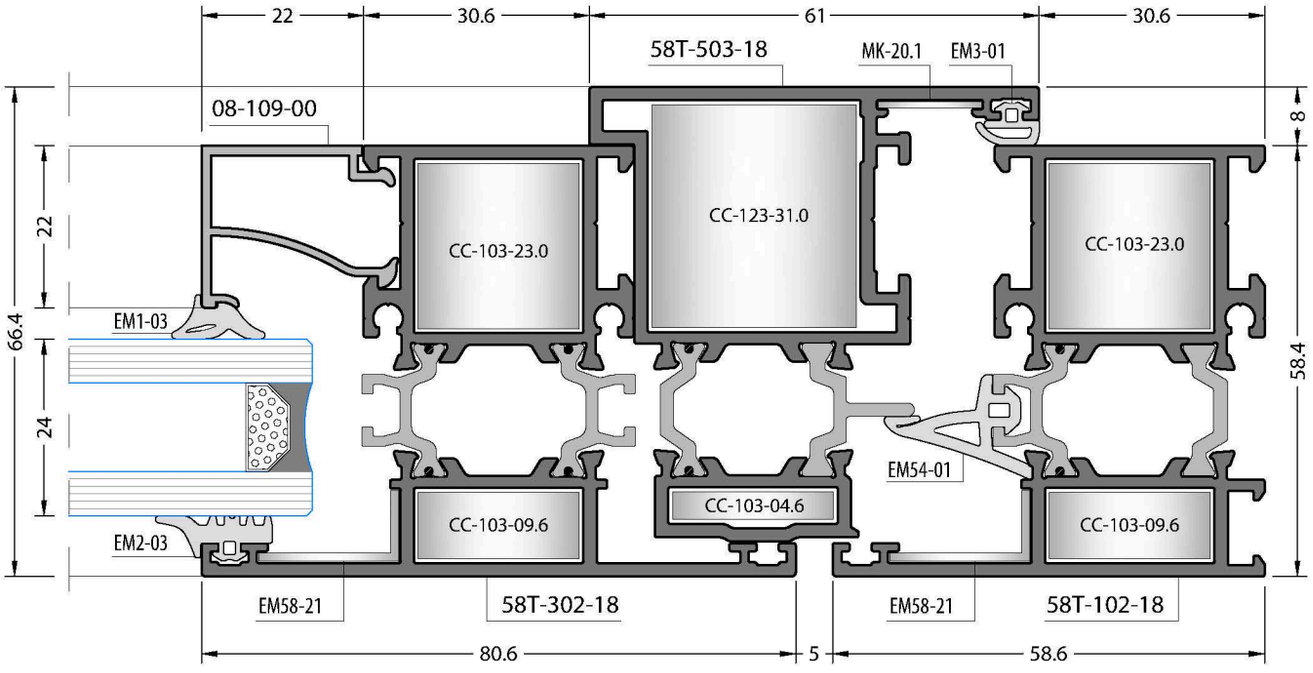
22
30.6
61
30.6
58T-503-18
MK-20.1
EM3-01
08-109-00
8
66.4
22
24
58.4
EM1-03
EM2-03
CC-103-23.0
CC-123-31.0
CC-103-23.0
CC-103-09.6
CC-103-04.6
CC-103-09.6
EM54-01
EM58-21
58T-302-18
EM58-21
58T-102-18
80.6
5
58.6

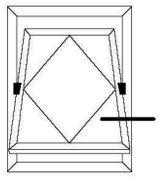

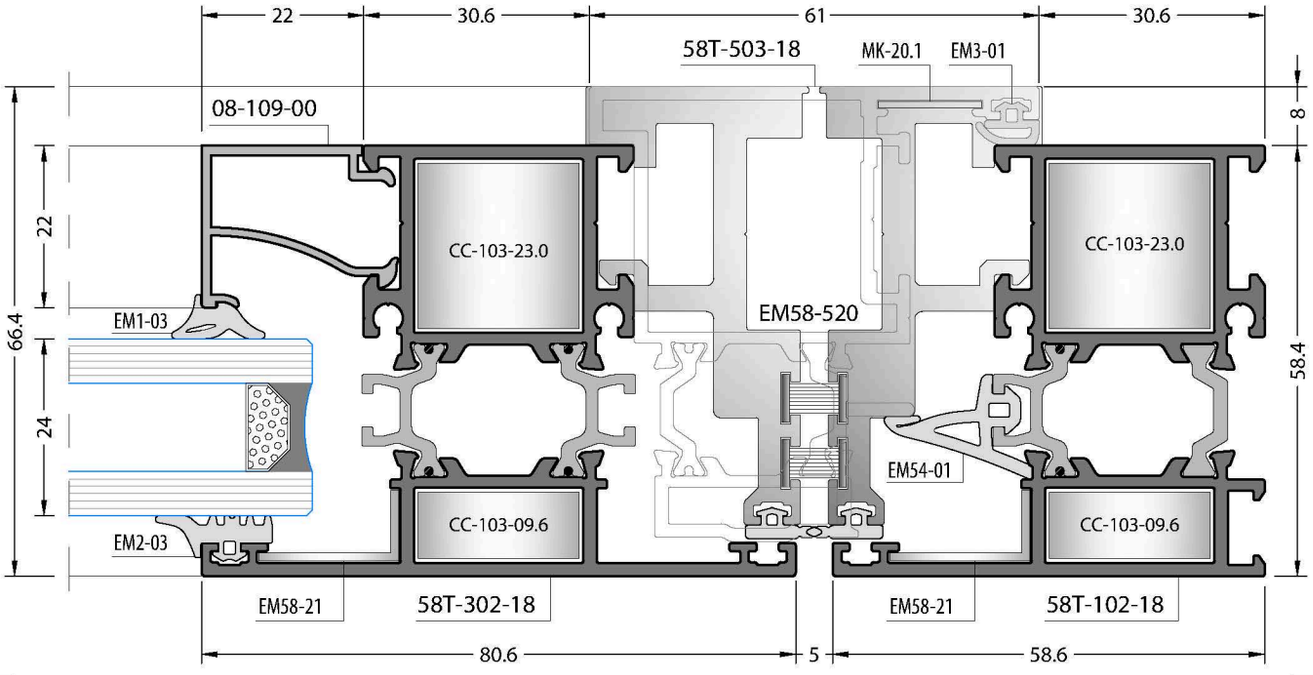
22
30.6
61
30.6
58T-503-18
MK-20.1
EM3-01
08-109-00
8
66.4
22
24
58.4
EM1-03
EM2-03
CC-103-23.0
EM58-520
CC-103-23.0
CC-103-09.6
EM54-01
CC-103-09.6
EM58-21
58T-302-18
EM58-21
58T-102-18
80.6
5
58.6

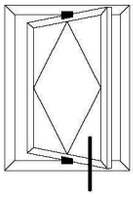

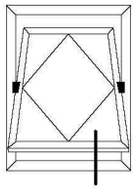

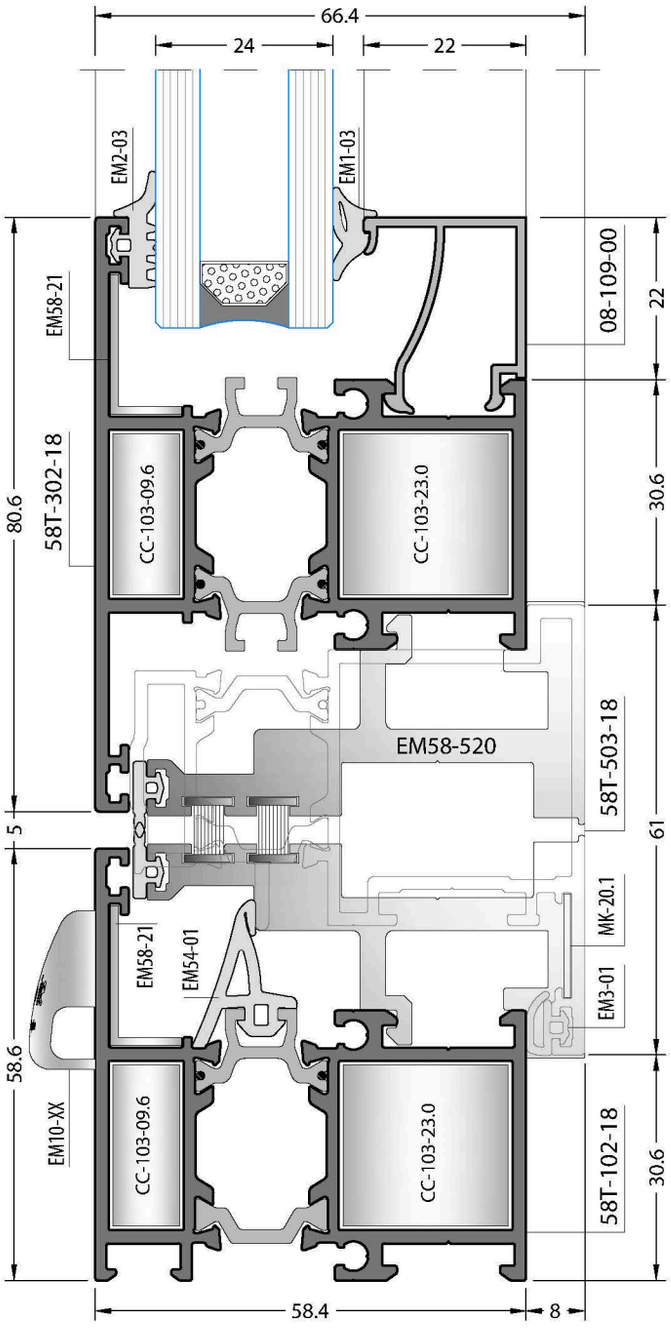
66.4
24
22
EM2-03
EM1-03
EM58-21
58T-302-18
80.6
CC-103-09.6
CC-103-23.0
08-109-00
22
30.6
EM58-520
58T-503-18
61
5
EM58-21
EM54-01
MK-20.1
EM3-01
58.6
EM10-XX
CC-103-09.6
CC-103-23.0
58T-102-18
30.6
58.4
8

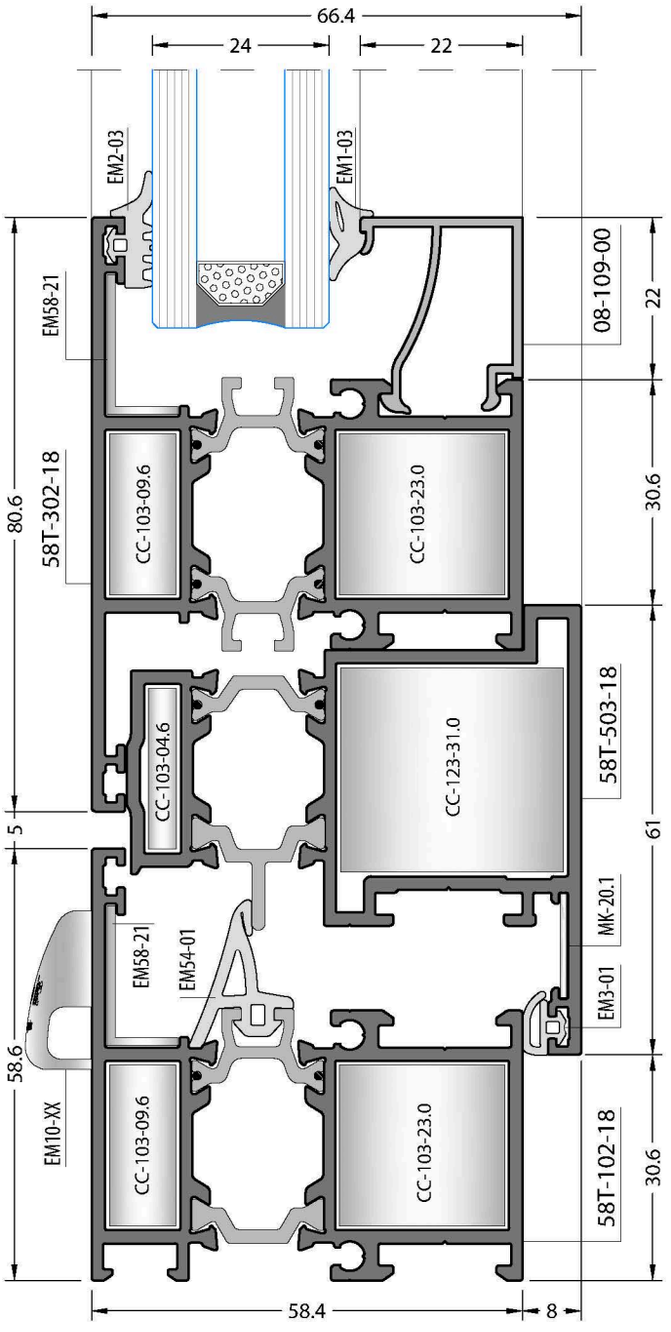
66.4
24
22
EM2-03
EM1-03
EM58-21
58T-302-18
80.6
CC-103-09.6
CC-103-23.0
08-109-00
22
30.6
CC-103-04.6
CC-123-31.0
58T-503-18
61
5
EM58-21
EM54-01
MK-20.1
EM3-01
58.6
EM10-XX
CC-103-09.6
CC-103-23.0
58T-102-18
30.6
58.4
8

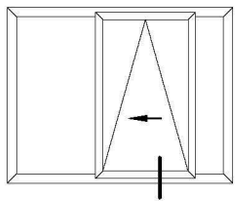

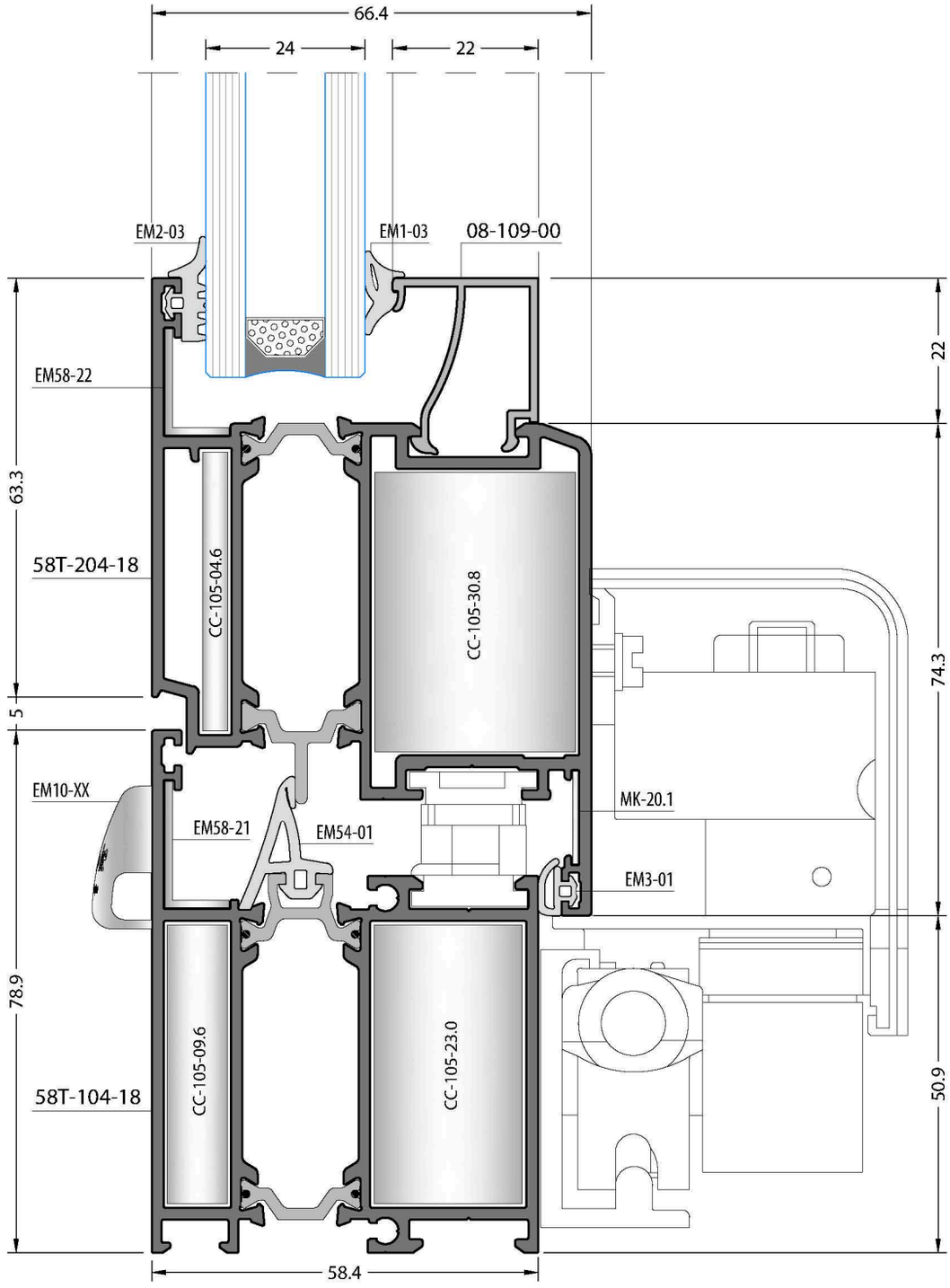
66.4
24
22
EM2-03
EM1-03
08-109-00
EM58-22
22
63.3
58T-204-18
CC-105-04.6
CC-105-30.8
74.3
5
EM10-XX
EM58-21
EM54-01
MK-20.1
EM3-01
78.9
CC-105-09.6
CC-105-23.0
58T-104-18
50.9
58.4

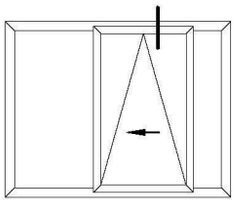

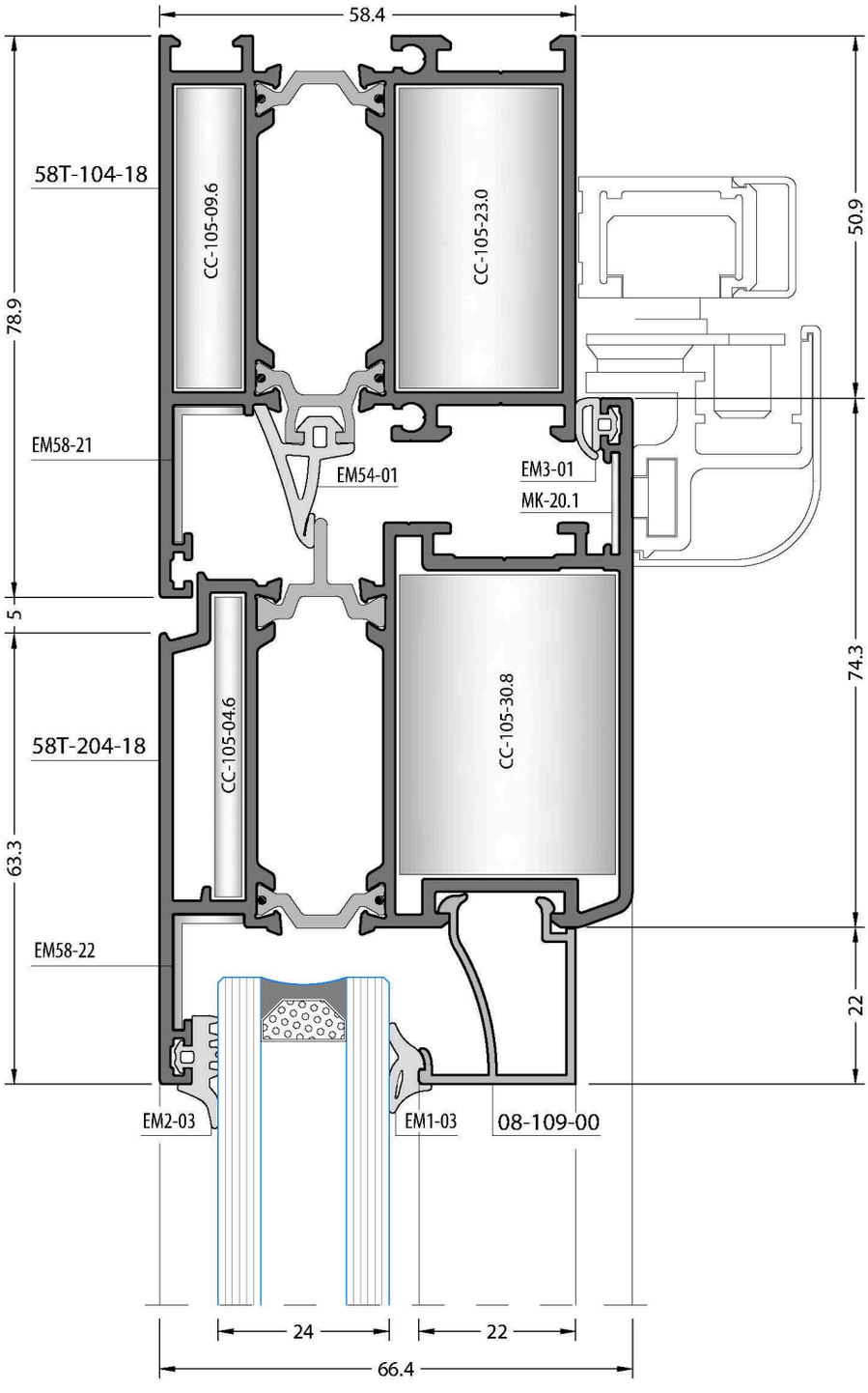
58.4
58T-104-18
CC-105-09.6
CC-105-23.0
78.9
50.9
EM58-21
EM54-01
EM3-01
MK-20.1
5
74.3
58T-204-18
CC-105-04.6
CC-105-30.8
63.3
EM58-22
22
EM2-03
EM1-03
08-109-00
24
22
66.4

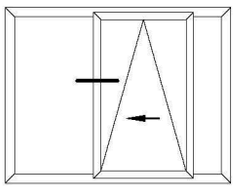

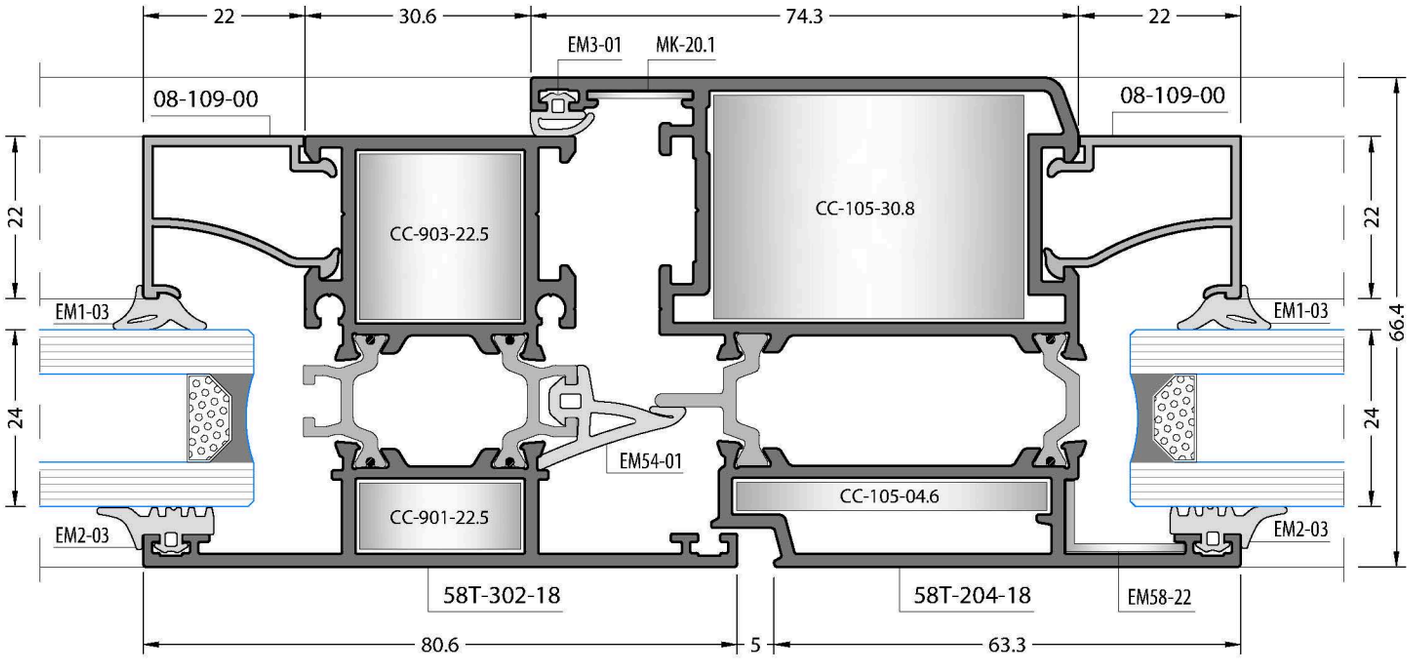
22
30.6
74.3
22
EM3-01
MK-20.1
08-109-00
08-109-00
CC-903-22.5
CC-105-30.8
EM1-03
EM1-03
EM54-01
CC-105-04.6
CC-901-22.5
EM2-03
EM2-03
58T-302-18
58T-204-18
EM58-22
80.6
5
63.3
22
24
22
24
66.4

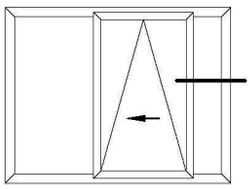

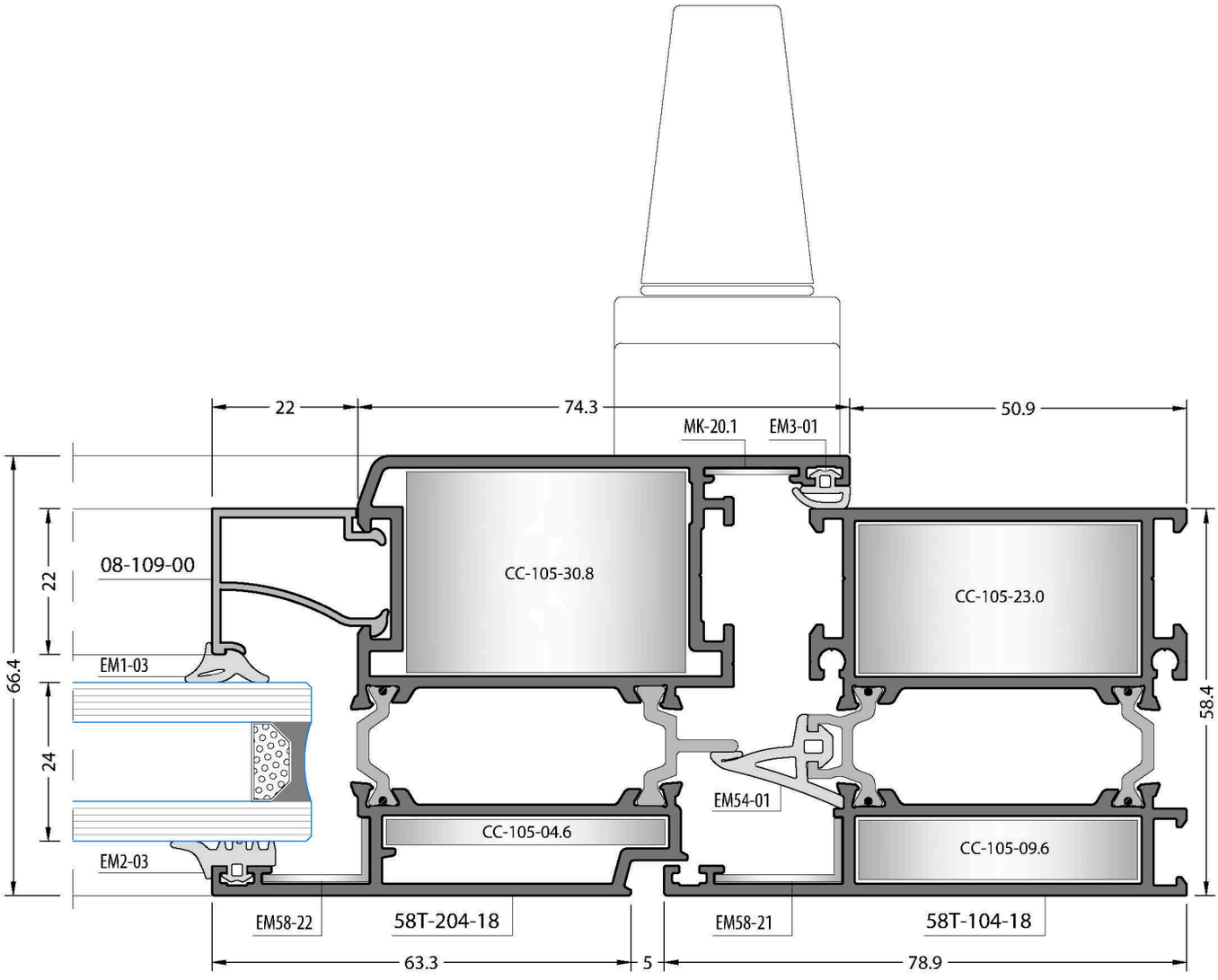
22
74.3
50.9
MK-20.1
EM3-01
08-109-00
CC-105-30.8
CC-105-23.0
EM1-03
66.4
22
24
58.4
EM54-01
CC-105-04.6
CC-105-09.6
EM2-03
EM58-22
58T-204-18
EM58-21
58T-104-18
63.3
5
78.9

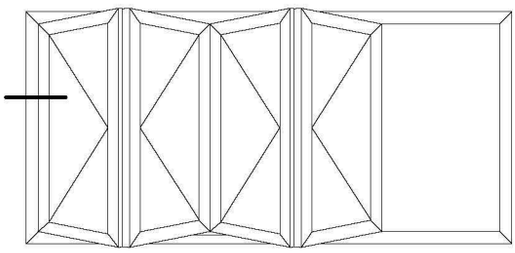

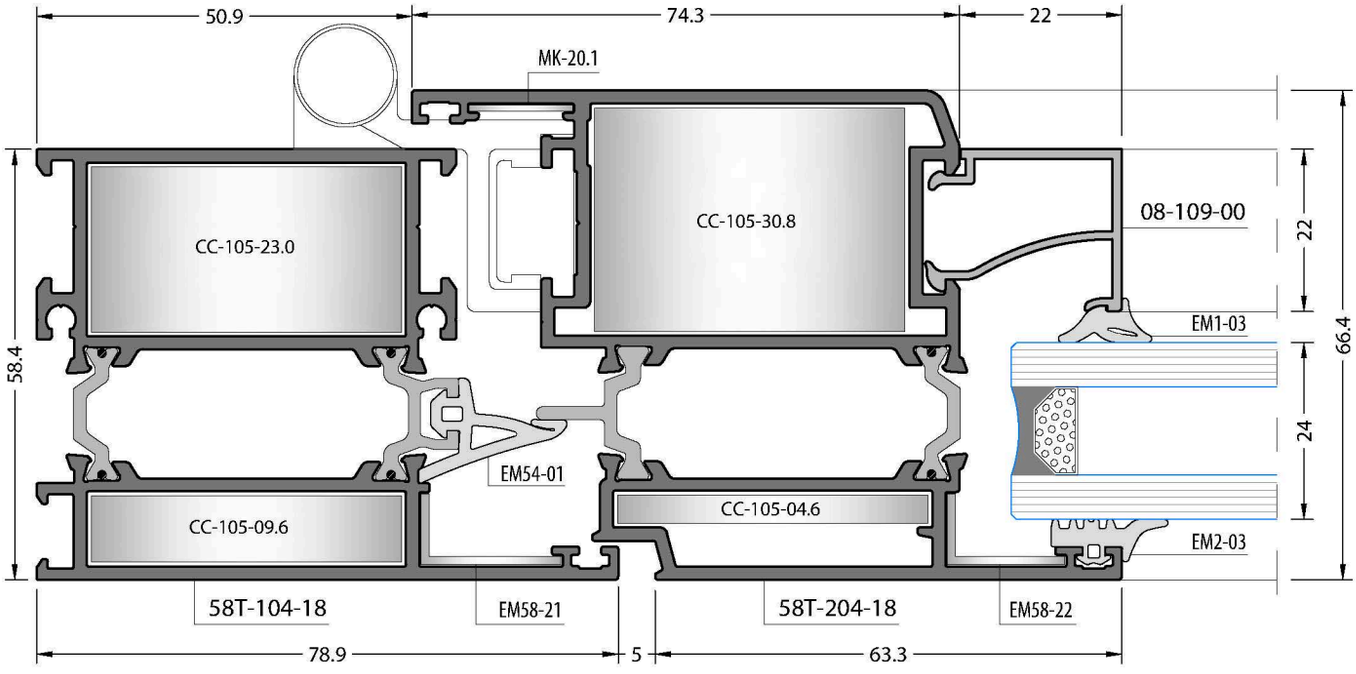
50.9
74.3
22
MK-20.1
CC-105-23.0
CC-105-30.8
08-109-00
EM1-03
58.4
22
24
66.4
EM54-01
CC-105-09.6
CC-105-04.6
EM2-03
58T-104-18
EM58-21
58T-204-18
EM58-22
78.9
5
63.3

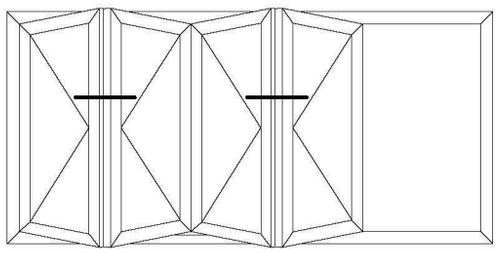

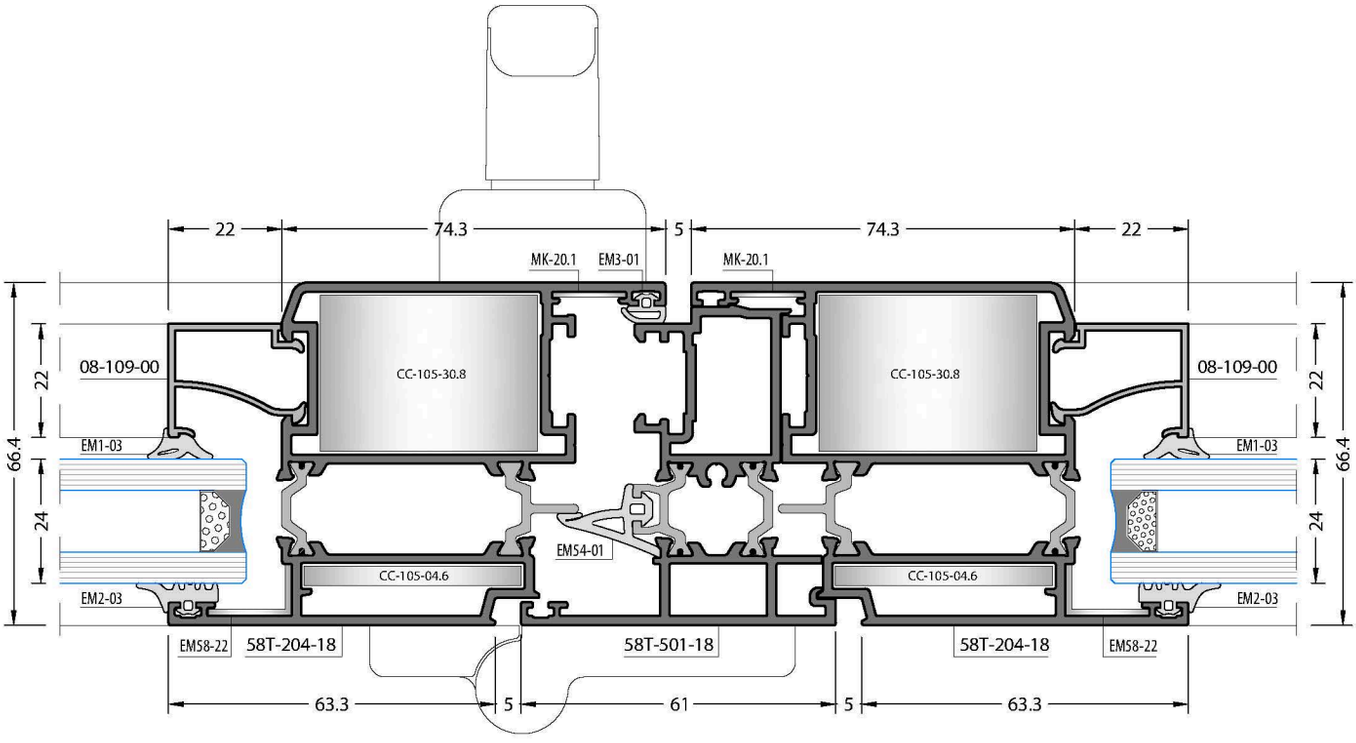

Not scaled / Ölçeksizdir

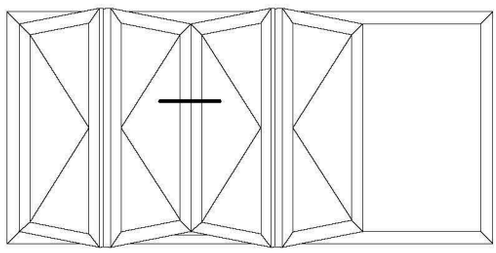

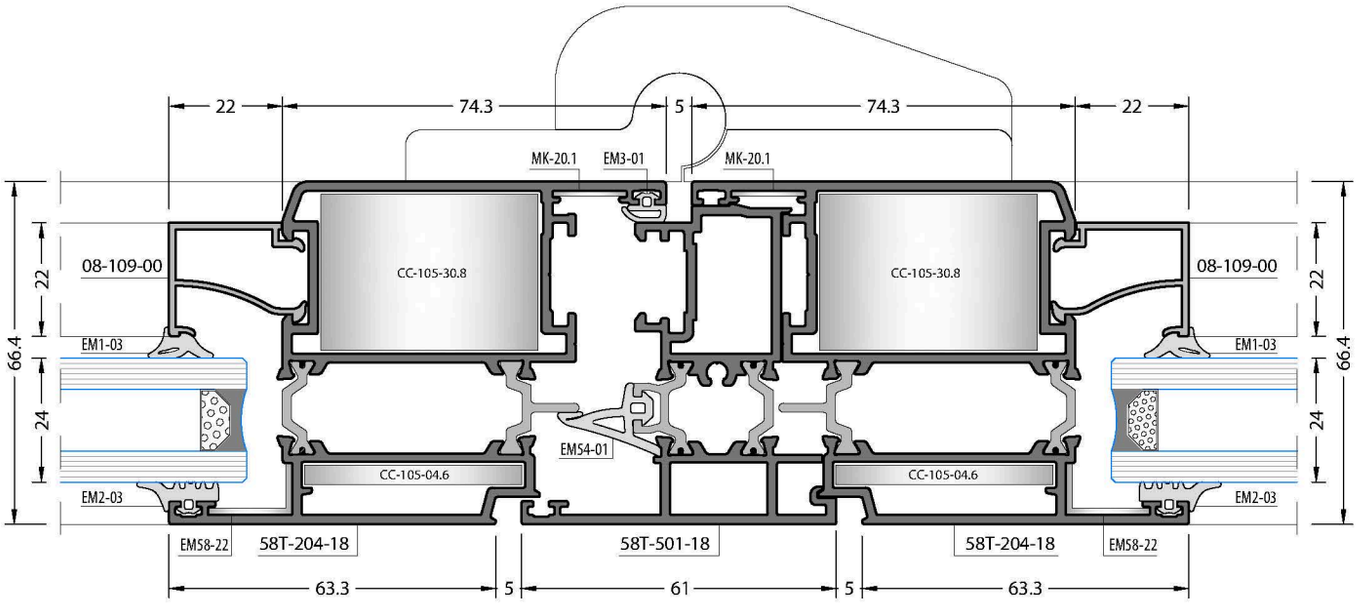

Not scaled / Ölçeksizdir

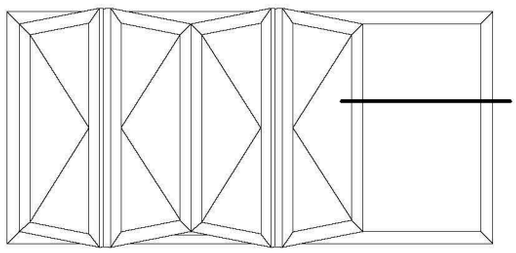

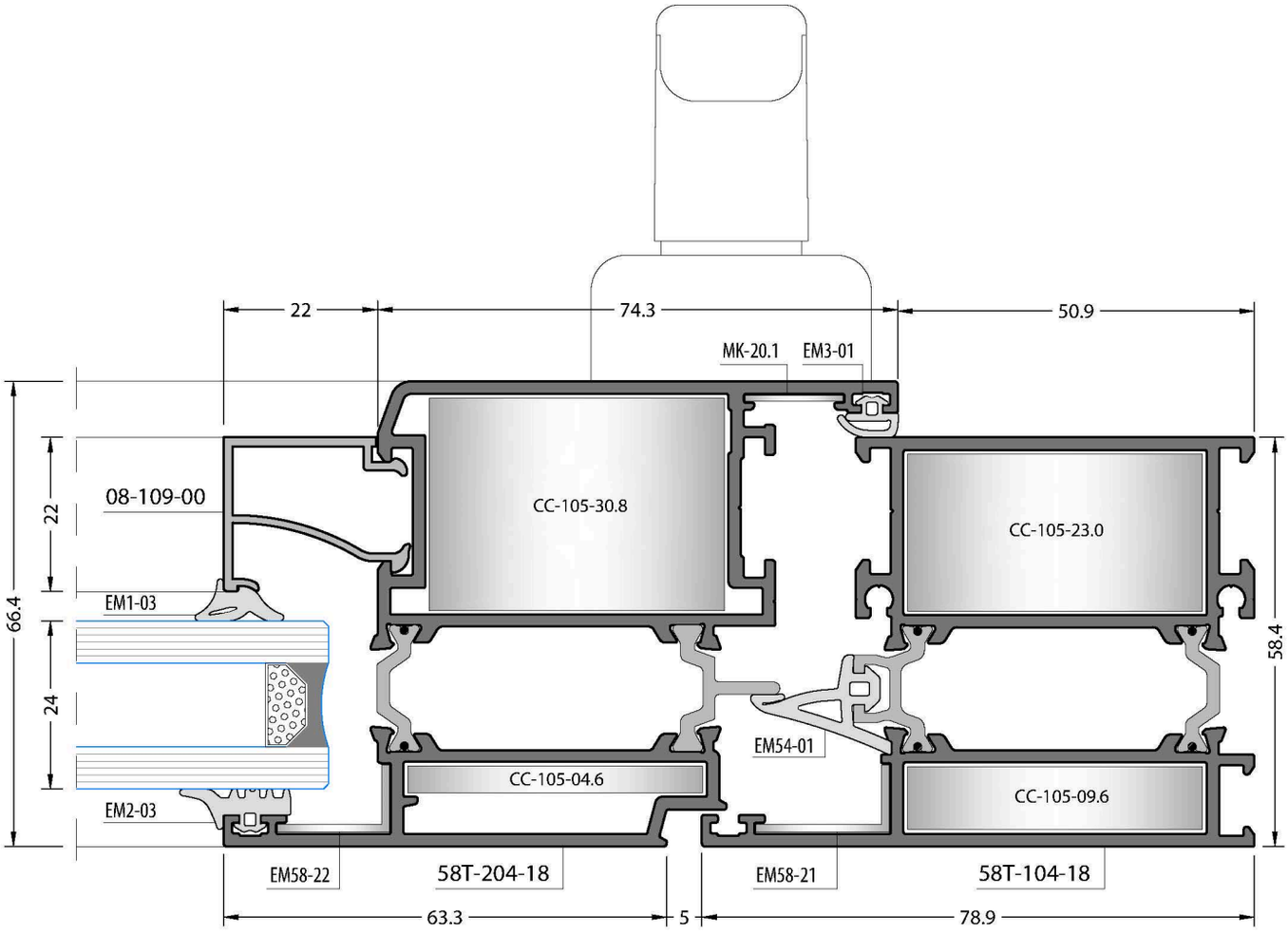
22
74.3
50.9
MK-20.1
EM3-01
66.4
22
24
08-109-00
EM1-03
EM2-03
CC-105-30.8
CC-105-23.0
CC-105-04.6
CC-105-09.6
EM54-01
58.4
EM58-22
58T-204-18
EM58-21
58T-104-18
63.3
5
78.9

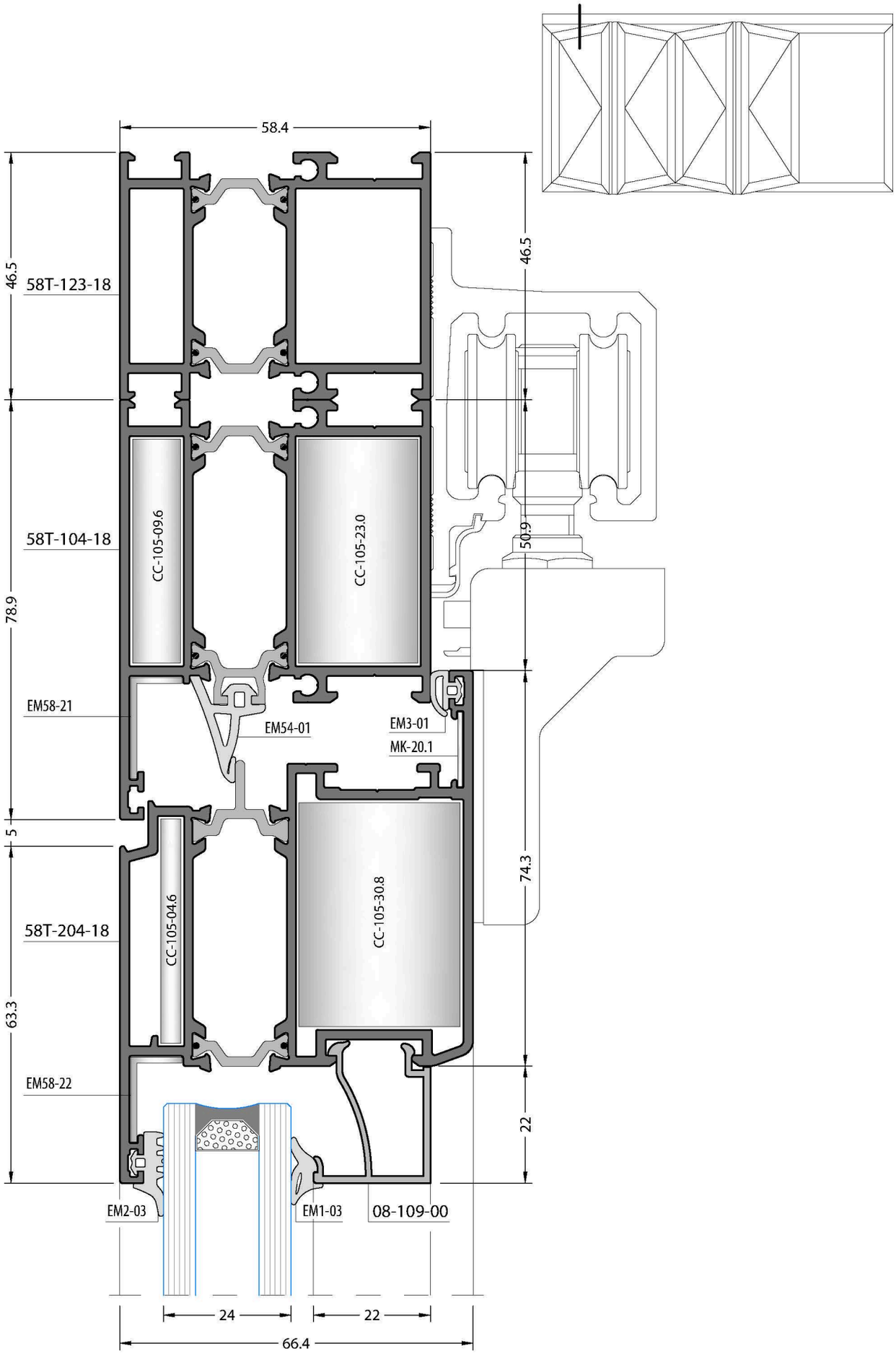
58.4
46.5
58T-123-18
78.9
58T-104-18
CC-105-09.6
CC-105-23.0
EM58-21
EM54-01
EM3-01
MK-20.1
5
63.3
58T-204-18
CC-105-04.6
CC-105-30.8
EM58-22
EM2-03
EM1-03
08-109-00
24
22
66.4
46.5
50.9
74.3
22

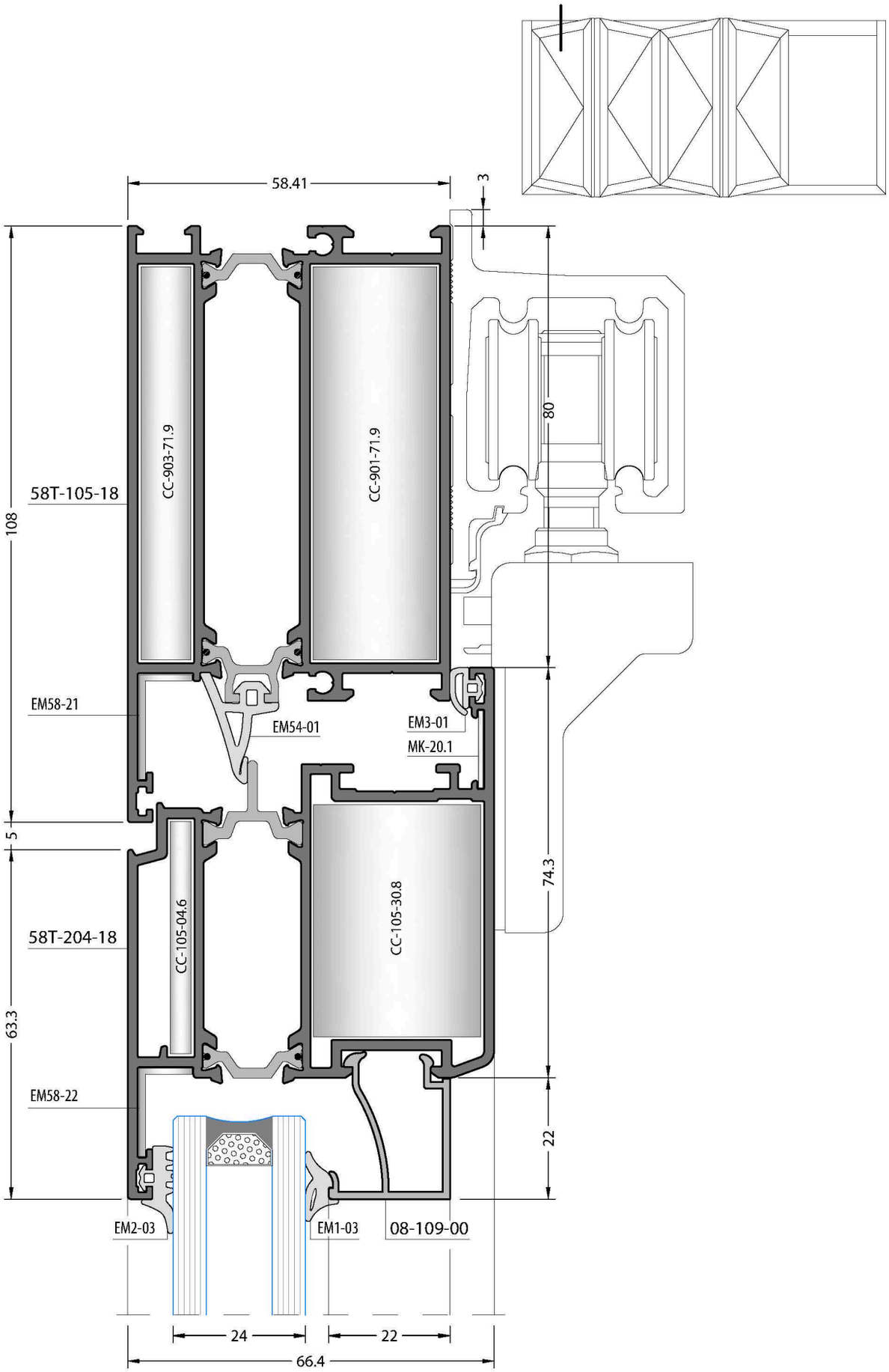
58.41
3
108
80
58T-105-18
CC-903-71.9
CC-901-71.9
EM58-21
EM54-01
EM3-01
MK-20.1
5
74.3
58T-204-18
CC-105-04.6
CC-105-30.8
63.3
EM58-22
22
EM2-03
EM1-03
08-109-00
24
22
66.4

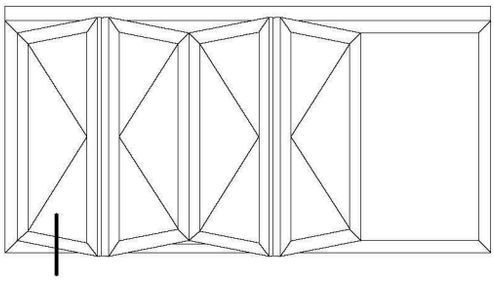

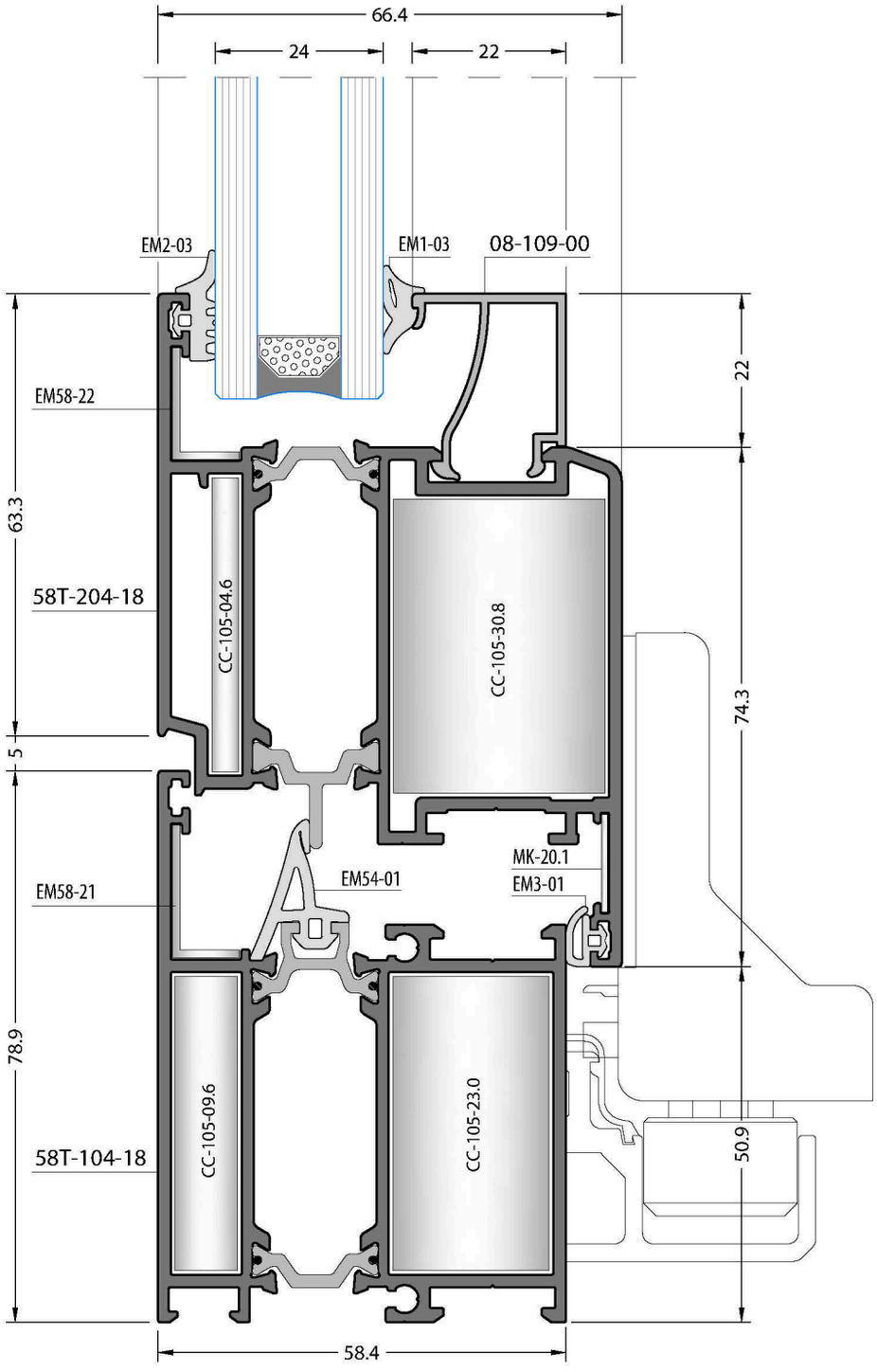
66.4
24
22
EM2-03
EM1-03
08-109-00
EM58-22
63.3
58T-204-18
CC-105-04.6
CC-105-30.8
22
74.3
5
MK-20.1
EM3-01
EM54-01
EM58-21
78.9
CC-105-09.6
CC-105-23.0
58T-104-18
50.9
58.4

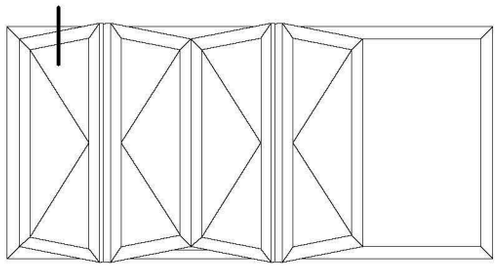

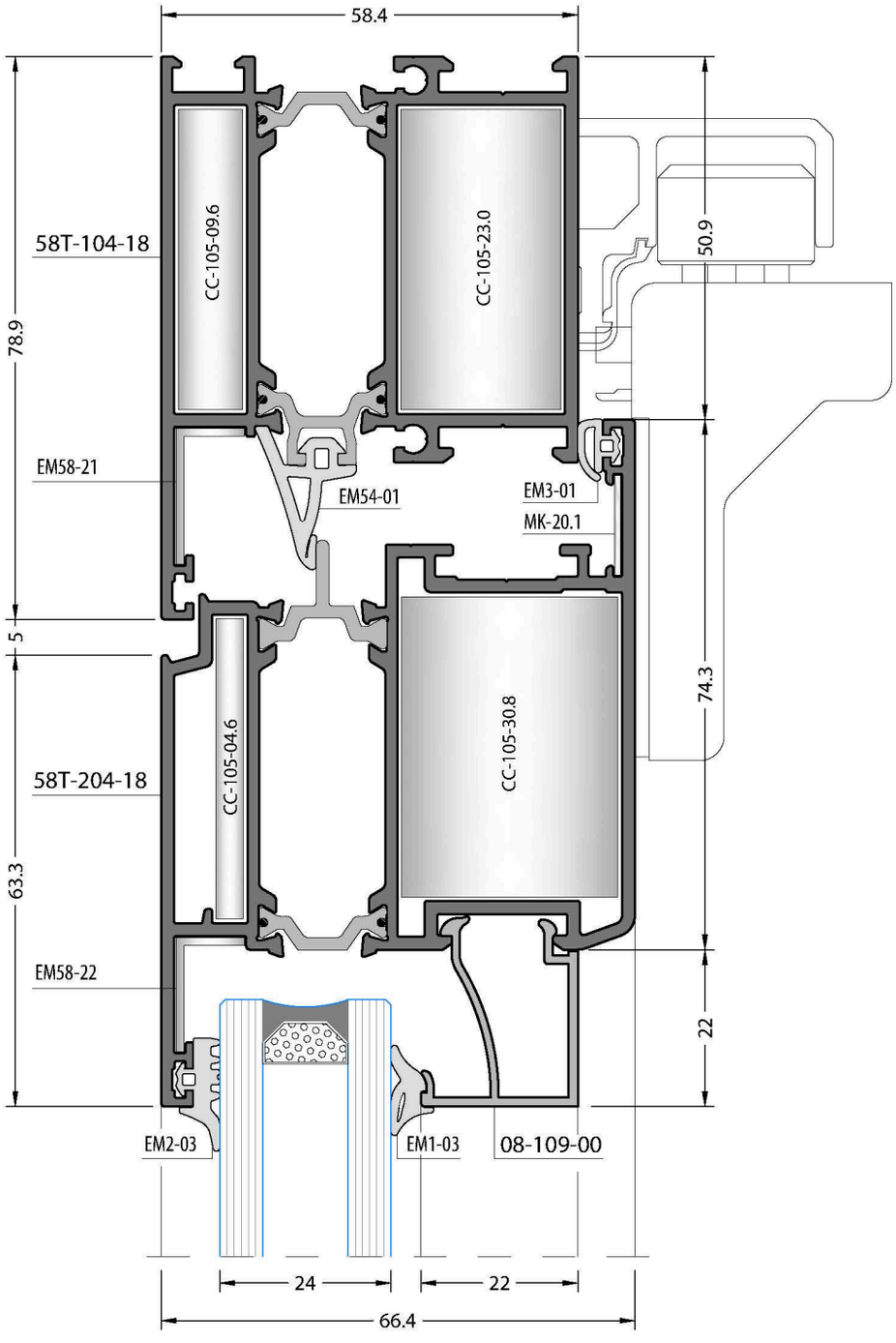
58.4
58T-104-18
78.9
CC-105-09.6
CC-105-23.0
50.9
EM58-21
EM54-01
EM3-01
MK-20.1
5
74.3
58T-204-18
63.3
CC-105-04.6
CC-105-30.8
EM58-22
22
EM2-03
EM1-03
08-109-00
24
22
66.4

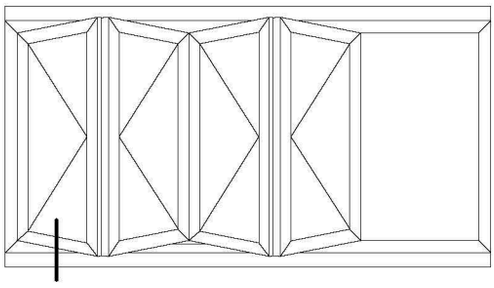

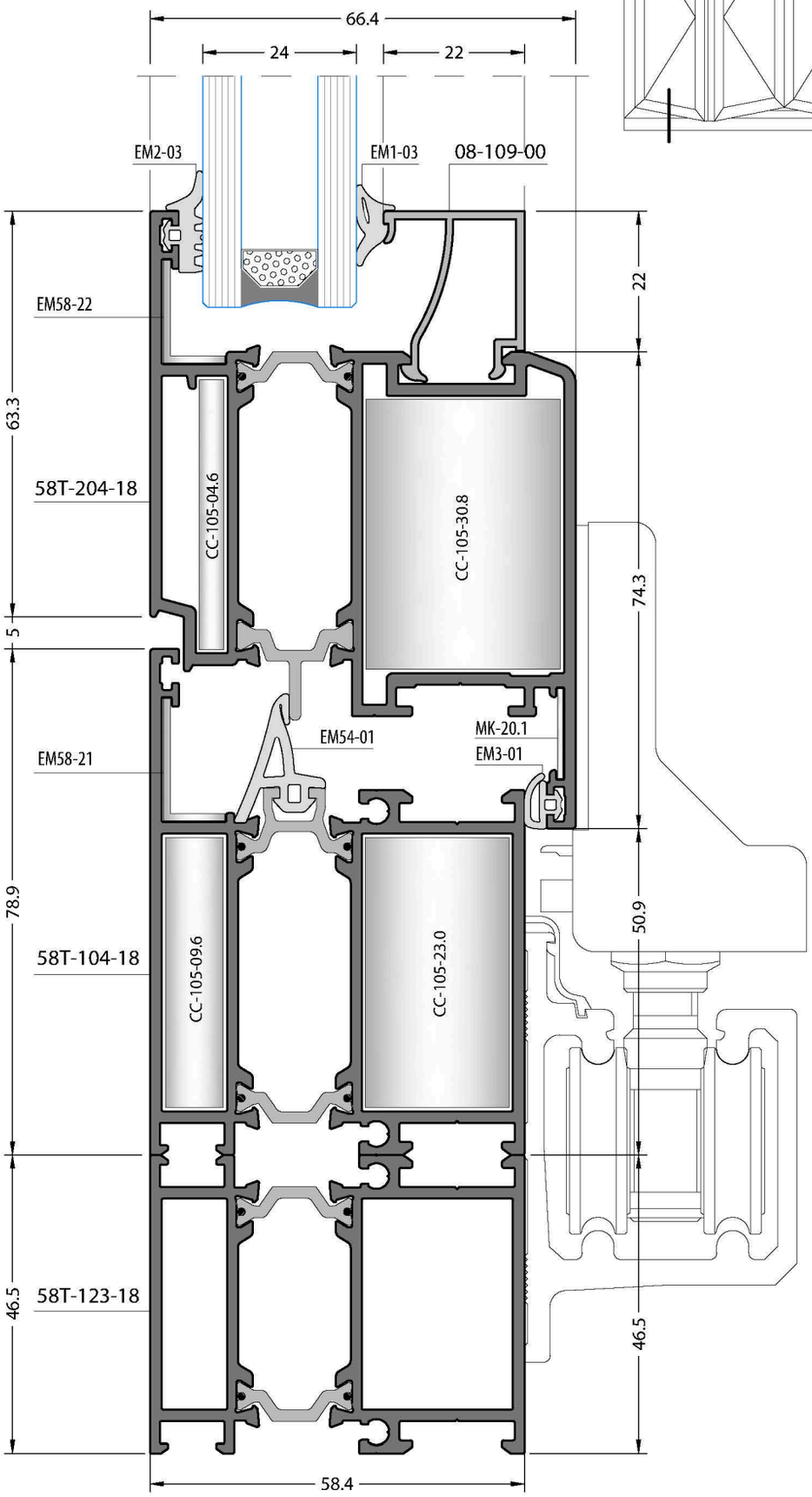
66.4
24
22
EM2-03
EM1-03
08-109-00
EM58-22
63.3
58T-204-18
CC-105-04.6
CC-105-30.8
5
EM54-01
MK-20.1
EM3-01
EM58-21
78.9
58T-104-18
CC-105-09.6
CC-105-23.0
46.5
58T-123-18
58.4
22
74.3
50.9
46.5

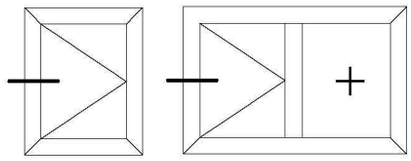

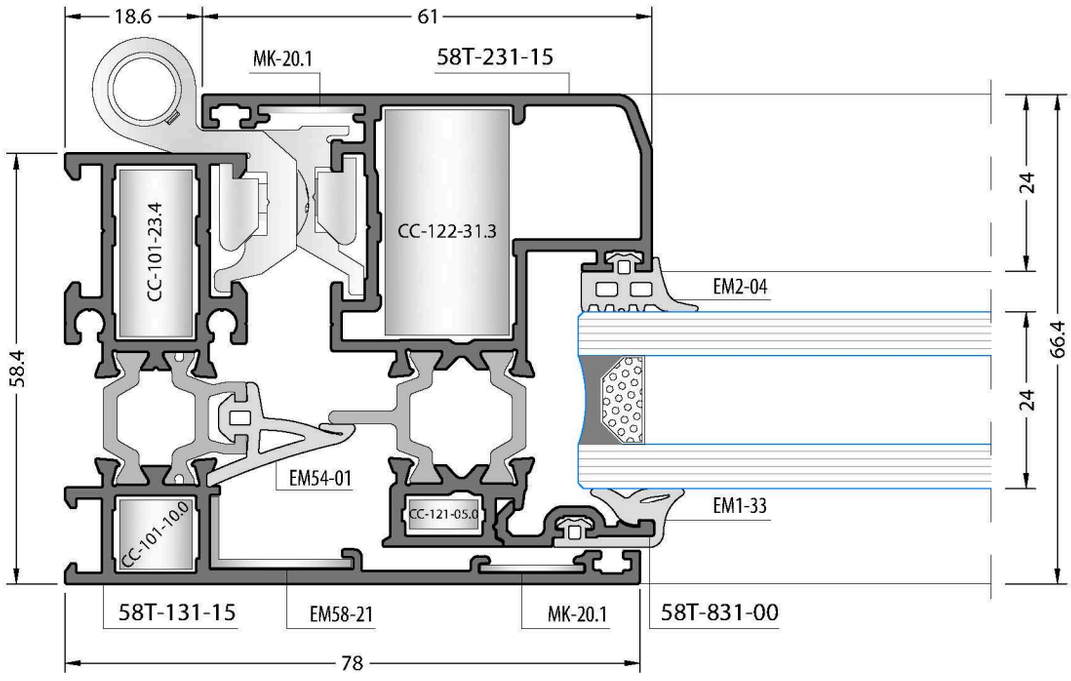
18.6
61
MK-20.1
58T-231-15
CC-101-23.4
CC-122-31.3
EM2-04
24
66.4
58.4
24
EM54-01
CC-121-05.0
CC-101-10.0
EM1-33
58T-131-15
EM58-21
MK-20.1
58T-831-00
78

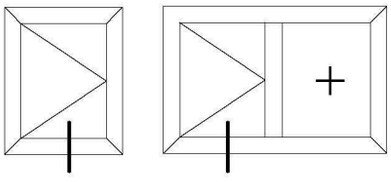

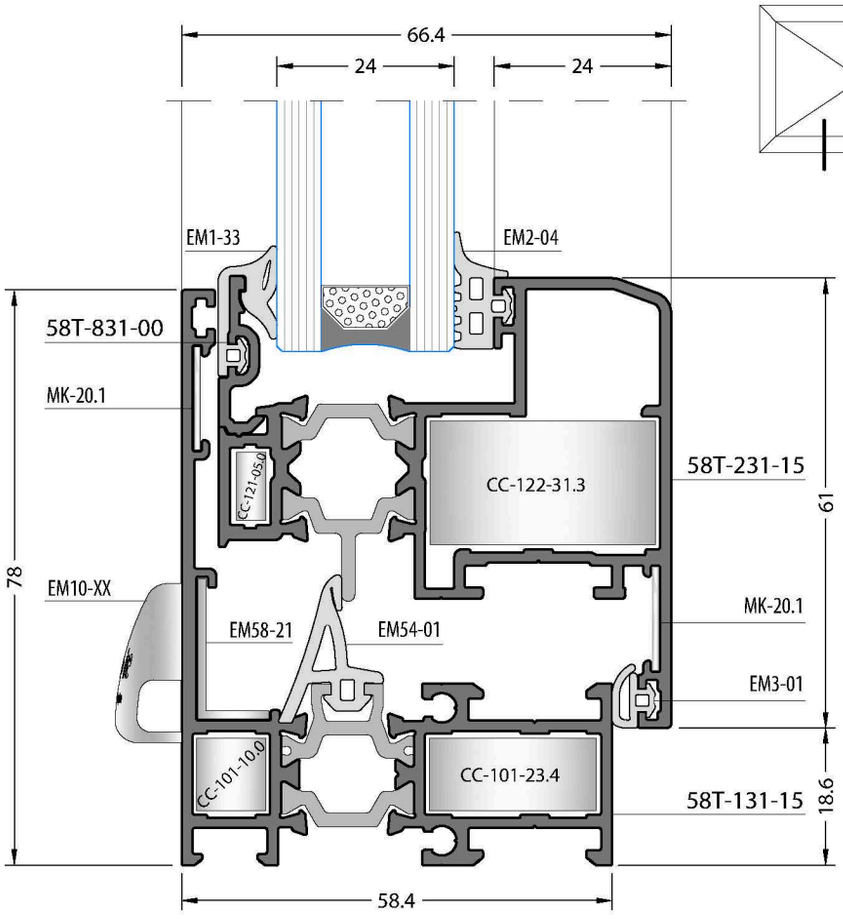
66.4
24
24
EM1-33
EM2-04
58T-831-00
MK-20.1
CC-121-05.0
CC-122-31.3
58T-231-15
61
78
EM10-XX
EM58-21
EM54-01
MK-20.1
EM3-01
CC-101-10.0
CC-101-23.4
58T-131-15
18.6
58.4

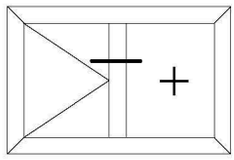

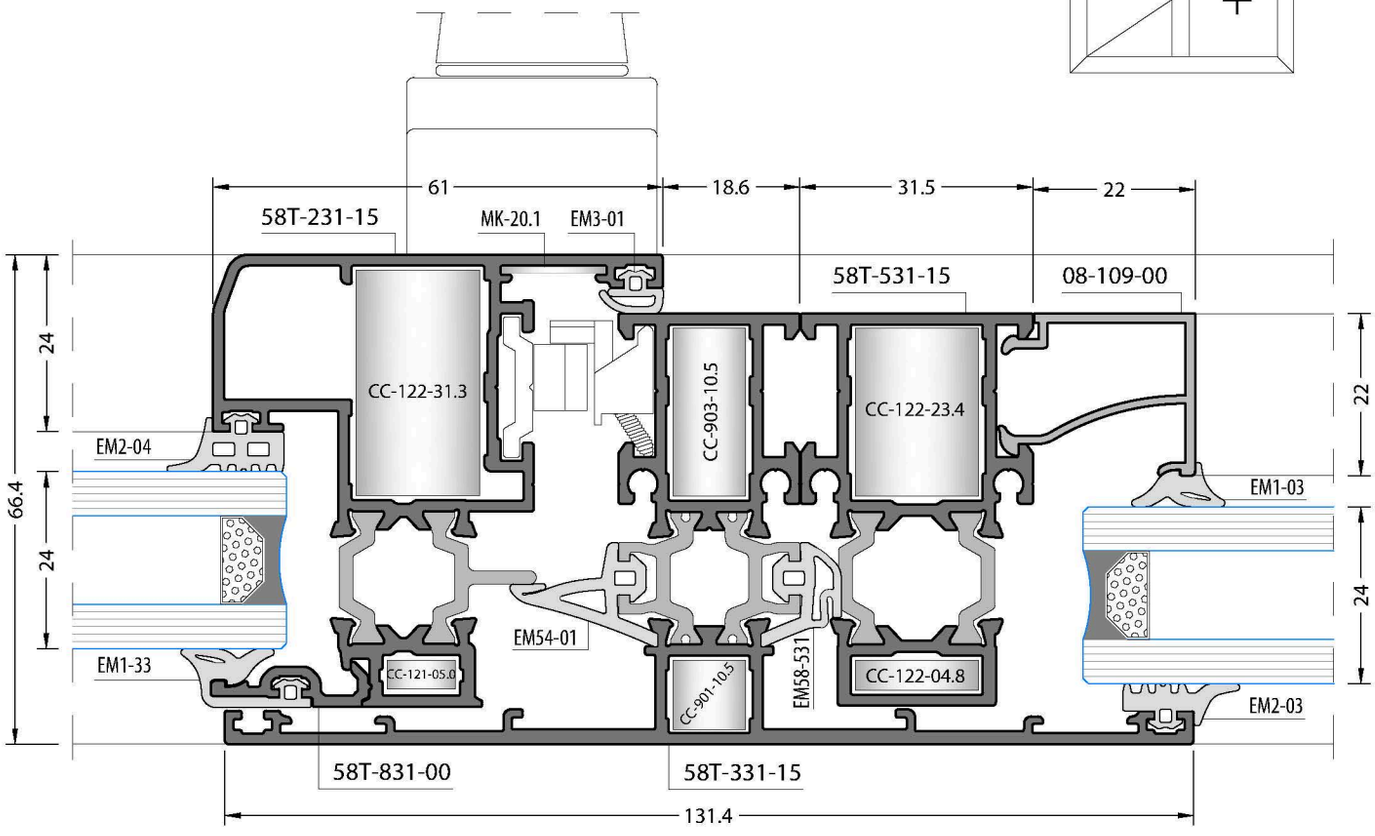
61
18.6
31.5
22
58T-231-15
MK-20.1
EM3-01
58T-531-15
08-109-00
66.4
24
24
22
24
CC-122-31.3
CC-903-10.5
CC-122-23.4
EM2-04
EM1-03
EM1-33
EM54-01
EM58-531
CC-121-05.0
CC-901-10.5
CC-122-04.8
EM2-03
58T-831-00
58T-331-15
131.4

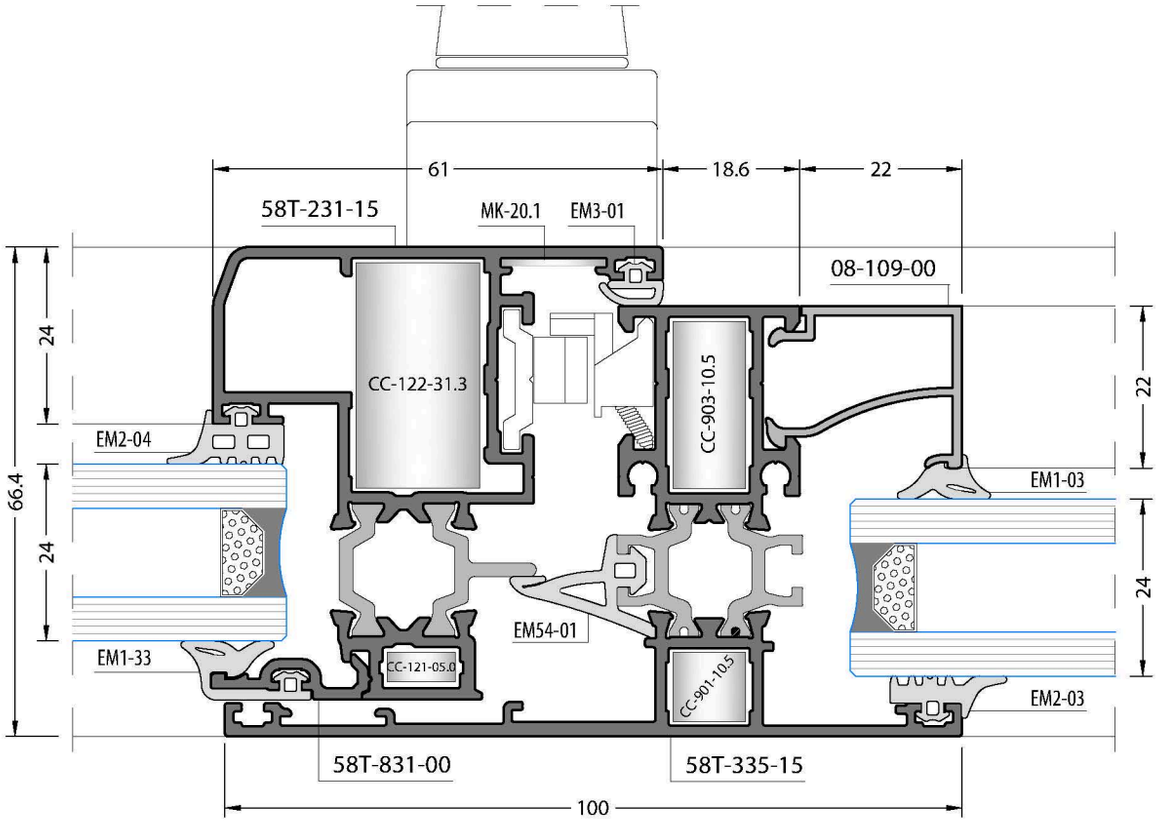
61
18.6
22
58T-231-15
MK-20.1
EM3-01
08-109-00
66.4
24
24
22
24
CC-122-31.3
CC-903-10.5
EM2-04
EM1-03
EM1-33
EM54-01
CC-121-05.0
CC-901-10.5
EM2-03
58T-831-00
58T-335-15
100

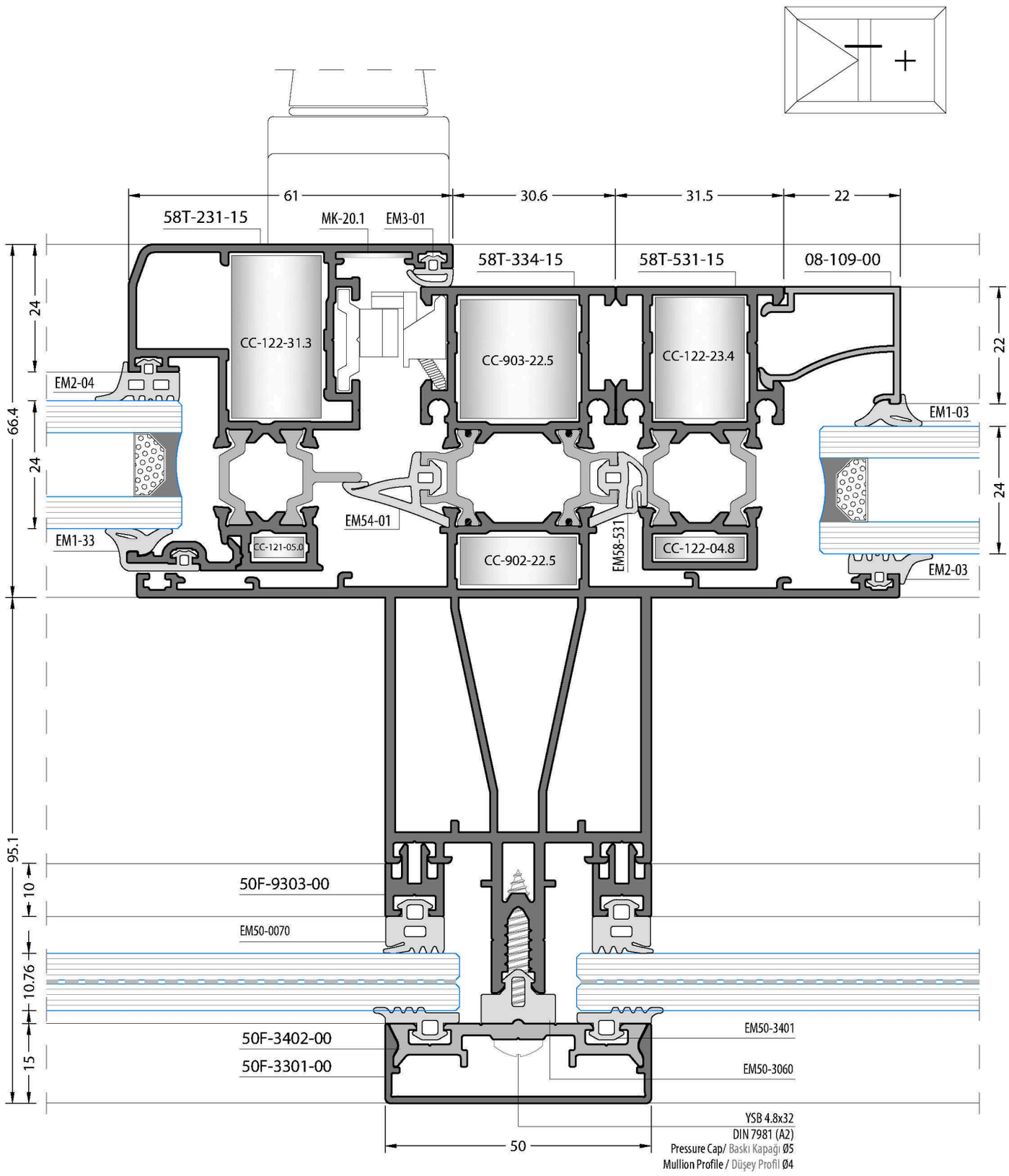
61
30.6
31.5
22
58T-231-15
MK-20.1
EM3-01
58T-334-15
58T-531-15
08-109-00
CC-122-31.3
CC-903-22.5
CC-122-23.4
EM2-04
EM1-03
EM54-01
EM58-531
EM1-33
CC-121-05.0
CC-902-22.5
CC-122-04.8
EM2-03
66.4
24
24
22
24
95.1
10
10.76
15
50F-9303-00
EM50-0070
50F-3402-00
50F-3301-00
EM50-3401
EM50-3060
YSB 4.8x32
DIN 7981 (A2)
Pressure Cap/ Baskı Kapağı Ø5
Mullion Profile / Düşey Profil Ø4
50

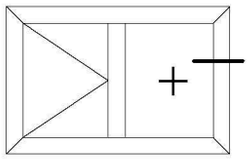

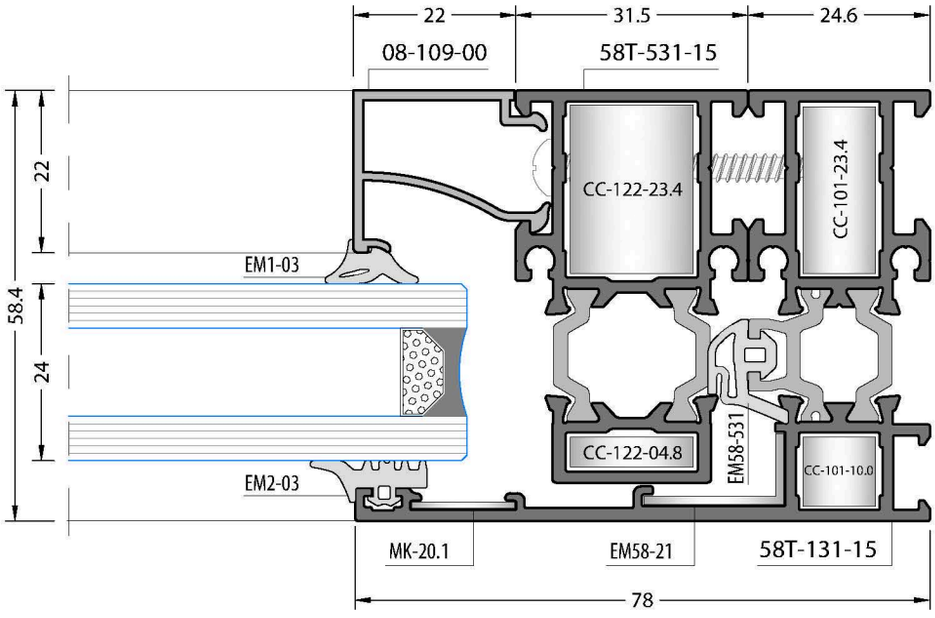
22
31.5
24.6
08-109-00
58T-531-15
22
58.4
24
EM1-03
EM2-03
CC-122-23.4
CC-101-23.4
CC-122-04.8
EM58-531
CC-101-10.0
MK-20.1
EM58-21
58T-131-15
78

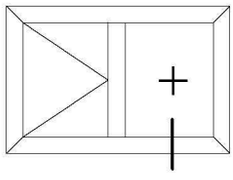

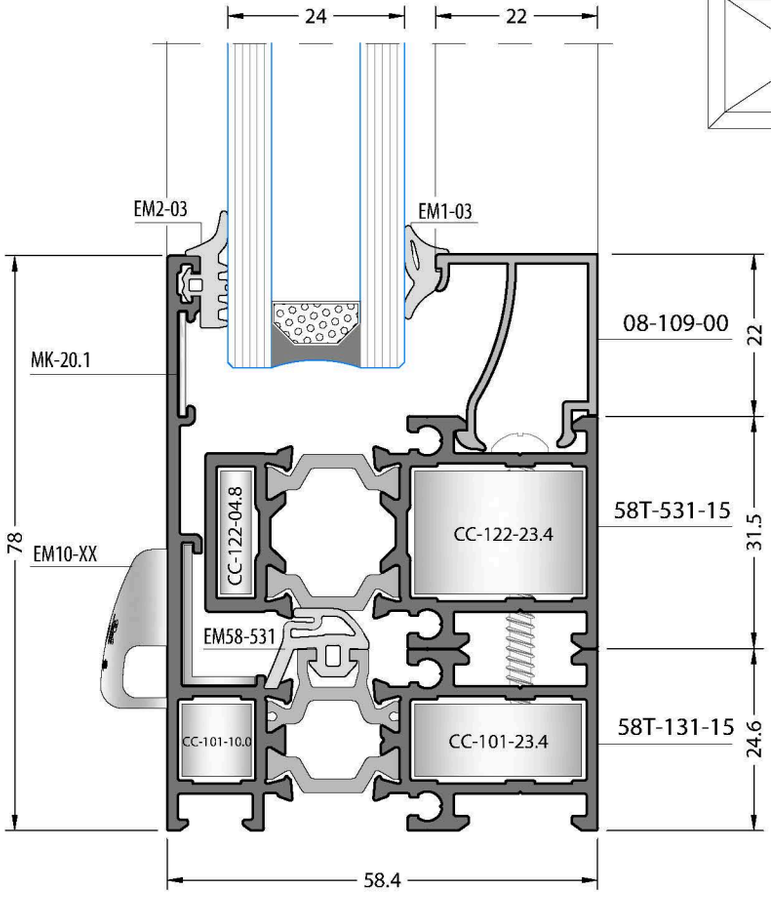
24
22
EM2-03
EM1-03
MK-20.1
08-109-00
22
58T-531-15
31.5
78
EM10-XX
CC-122-04.8
CC-122-23.4
EM58-531
58T-131-15
24.6
CC-101-10.0
CC-101-23.4
58.4

58T

GLAZING TABLES / CAM TABLOLARI

GLAZING TABLE / CAM TABLOSU

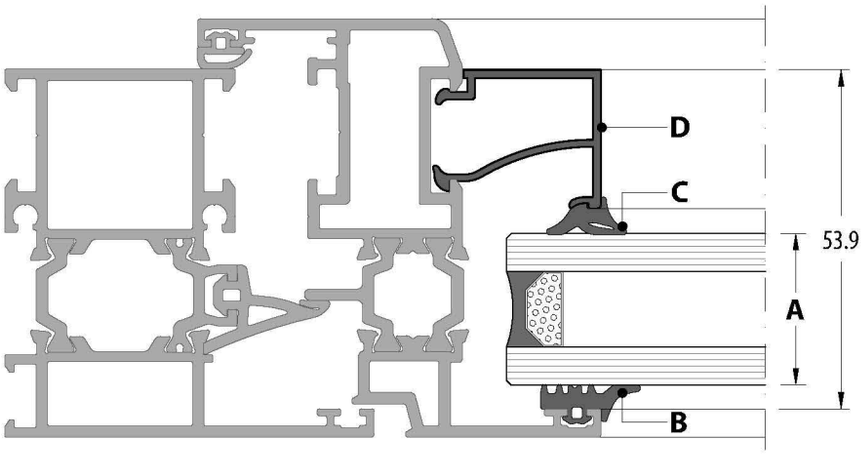

A	B	C	D
GLAZING THICKNESS CAM KALINLIĞI	OUTSIDE GLASS GASKET DIŞ CAM FİTİLİ	INSIDE GLASS GASKET İÇ CAM FİTİLİ	GLAZING BEAD CAM ÇITASI
4 mm	EM2-03	EM1-03	08-121-00
5 mm	EM2-03	EM1-02	
4 mm	EM2-03	EM1-04	08-120-00
5 mm	EM2-03	EM1-03	
6 mm	EM2-03	EM1-02	
7 mm	EM2-03	EM1-05	08-116-00
8 mm	EM2-03	EM1-04	
9 mm	EM2-03	EM1-03	
10 mm	EM2-03	EM1-02	
11 mm	EM2-03	EM1-05	08-115-00
12 mm	EM2-03	EM1-04	
13 mm	EM2-03	EM1-03	
14 mm	EM2-03	EM1-02	
14 mm	EM2-03	EM1-05	08-117-00
15 mm	EM2-03	EM1-04	
16 mm	EM2-03	EM1-03	
17 mm	EM2-03	EM1-02	
15 mm	EM2-03	EM1-05	08-114-00
16 mm	EM2-03	EM1-04	
17 mm	EM2-03	EM1-03	
18 mm	EM2-03	EM1-02	

A	B	C	D
GLAZING THICKNESS CAM KALINLIĞI	OUTSIDE GLASS GASKET DIŞ CAM FİTİLİ	INSIDE GLASS GASKET İÇ CAM FİTİLİ	GLAZING BEAD CAM ÇITASI
16 mm	EM2-03	EM1-05	08-113-00
17 mm	EM2-03	EM1-04	
18 mm	EM2-03	EM1-03	
19 mm	EM2-03	EM1-02	
19 mm	EM2-03	EM1-05	08-112-00
20 mm	EM2-03	EM1-04	
21 mm	EM2-03	EM1-03	
22 mm	EM2-03	EM1-02	
22 mm	EM2-03	EM1-05	08-111-00
23 mm	EM2-03	EM1-04	
24 mm	EM2-03	EM1-03	
25 mm	EM2-03	EM1-02	
22 mm	EM2-03	EM1-05	08-110-00
23 mm	EM2-03	EM1-04	
24 mm	EM2-03	EM1-03	
25 mm	EM2-03	EM1-02	
22 mm	EM2-03	EM1-05	08-109-00
23 mm	EM2-03	EM1-04	
24 mm	EM2-03	EM1-03	
25 mm	EM2-03	EM1-02	

GLAZING TABLE / CAM TABLOSU

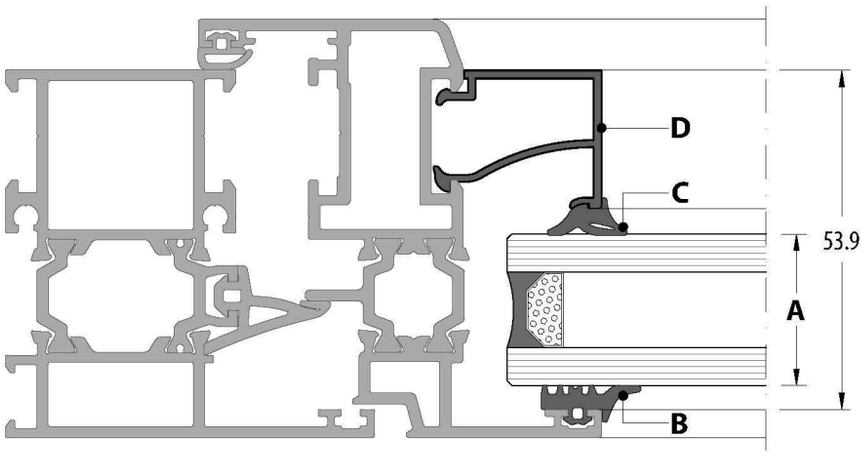

A	B	C	D
GLAZING THICKNESS CAM KALINLIĞI	OUTSIDE GLASS GASKET DIŞ CAM FİTİLİ	INSIDE GLASS GASKET İÇ CAM FİTİLİ	GLAZING BEAD CAM ÇITASI
25 mm	EM2-03	EM1-05	08-108-00
26 mm	EM2-03	EM1-04	
27 mm	EM2-03	EM1-03	
28 mm	EM2-03	EM1-02	
27 mm	EM2-03	EM1-05	08-107-00
28 mm	EM2-03	EM1-04	
29 mm	EM2-03	EM1-03	
30 mm	EM2-03	EM1-02	
30 mm	EM2-03	EM1-05	08-105-00
31 mm	EM2-03	EM1-04	
32 mm	EM2-03	EM1-03	
33 mm	EM2-03	EM1-02	
31 mm	EM2-03	EM1-05	08-104-00
32 mm	EM2-03	EM1-04	
33 mm	EM2-03	EM1-03	
34 mm	EM2-03	EM1-02	
34 mm	EM2-03	EM1-05	08-103-00
35 mm	EM2-03	EM1-04	
36 mm	EM2-03	EM1-03	
37 mm	EM2-03	EM1-02	

GLAZING TABLE / CAM TABLOSU

HIDDEN SASH / GİZLİ KANAT

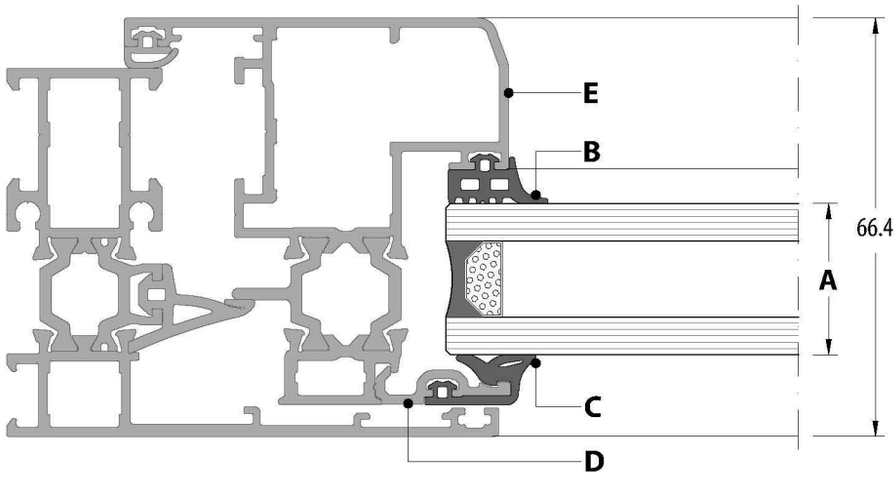

A	B	C	D	E
GLAZING THICKNESS CAM KALINLIĞI	OUTSIDE GLASS GASKET DIŞ CAM FİTİLİ	INSIDE GLASS GASKET İÇ CAM FİTİLİ	GLAZING BEAD CAM ÇITASI	SASH PROFILE KANAT PROFİLİ
24 mm	EM2-04	EM1-33	58T-831-00	58T-231-15
26 mm	EM2-03			

58T

ACCESSORIES / AKSESUARLAR

GASKETS / FİTİLLER

CODE / KOD	DRAWING / ÇİZİM	APPLICATION UYGULAMA	DESCRIPTION AÇIKLAMA	MATERIAL MALZEME	WEIGHT AĞIRLIK Kg/m	IN ONE PACKAGE PAKET MİKTARI
EM1-02		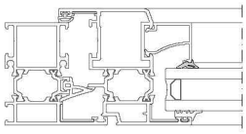	Glazing Gasket Inside İç Cam Fitili	EPDM	0.040	375 m
EM1-03		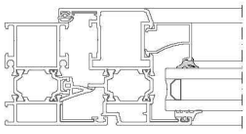	Glazing Gasket Inside İç Cam Fitili	EPDM	0.050	300 m
EM1-04		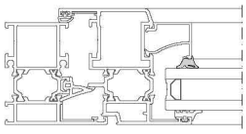	Glazing Gasket Inside İç Cam Fitili	EPDM	0.065	230 m
EM1-05		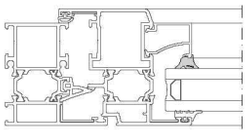	Glazing Gasket Inside İç Cam Fitili	EPDM	0.071	210 m
EM2-03		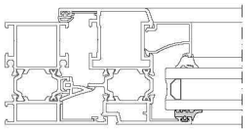	Glazing Gasket Outside Dış Cam Fitili	EPDM	0.069	215 m
EM54-01	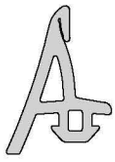	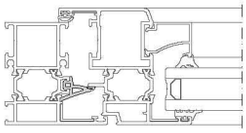	Central Gasket Tozluk Fitili	EPDM	0.128	117 m
EM3-01		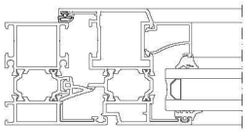	Acoustical Gasket Bini Fitili	EPDM	0.032	465 m

GASKETS / FİTİLLER

CODE / KOD	DRAWING / ÇİZİM	APPLICATION UYGULAMA	DESCRIPTION AÇIKLAMA	MATERIAL MALZEME	WEIGHT AĞIRLIK Kg/m	IN ONE PACKAGE PAKET MİKTARI
EM2-04		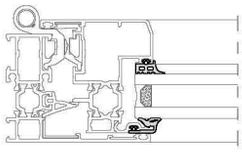	Hidden Sash Glazing Gasket Inside Gizli Kanat İç Cam Fitili	EPDM	0.081	185 m
EM1-33		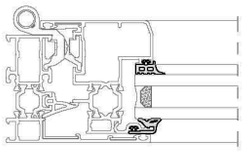	Hidden Sash Glazing Gasket Outside Gizli Kanat Dış Cam Fitili	EPDM	0.085	175 m
EM58-531		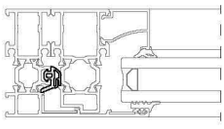	Hidden Sash Central Gasket Gizli Kanat Tozluk Fitili	EPDM	0.083	180 m
PB-7-1000		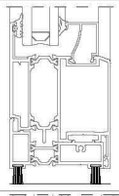	Brush / Fırça (10 mm)	-	-	200 m
PB-7-1500		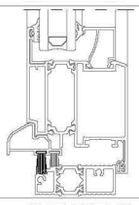	Brush / Fırça (15 mm)	-	-	200 m
AKF-195 B	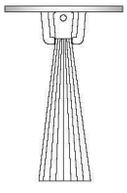	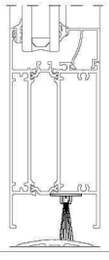	Brush / Fırça (35 mm)	-	-	90cm /100 cm

ENJECTION CORNER / ENJEKSİYON KÖŞE

CODE / KOD	DRAWING / ÇİZİM	APPLICATION UYGULAMA	DESCRIPTION AÇIKLAMA	MATERIAL MALZEME	WEIGHT AĞIRLIK Kg/m	IN ONE PACKAGE PAKET MİKTARI
EM54-C01		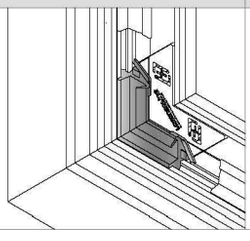	-	EPDM	-	50 Pieces / Adet

CUTTED CORNER JOINTS / KESİLMİŞ KÖŞE TAKOZLAR

CODE / KOD	DRAWING / ÇİZİM	APPLICATION / UYGULAMA	PROFILE CODE PROFİL KOD	CUTTING SIZE KESİM ÖLÇÜSÜ	APPLICATION PROFILES ÇALIŞTIĞI PROFİLLER
CC-101-04.6		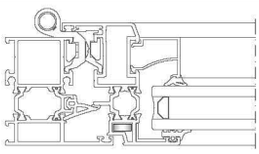	09-101-00	4.6 mm	58T-201-18 58T-201-20
CC-101-04.9		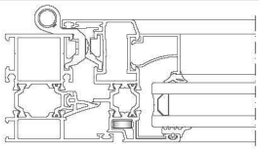	09-101-00	4.9 mm	58T-201-15
CC-101-09.6		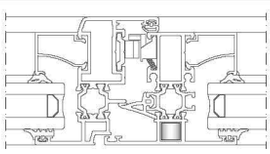	09-101-00	9.6 mm	58T-301-18 58T-301-20 58T-507-18
CC-101-10.0		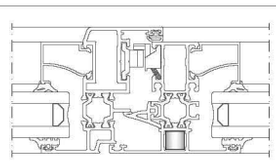	09-101-00	10 mm	58T-301-15 58T-131-15 58T-141-15 58T-335-15
CC-101-23.0		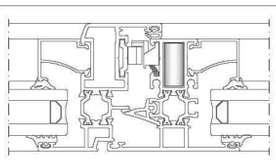	09-101-00	23 mm	58T-301-18 58T-301-20 58T-507-18
CC-101-23.4		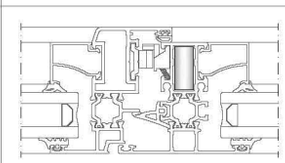	09-101-00	23.4 mm	58T-301-15 58T-131-15 58T-141-15 58T-335-15
CC-101-30.8		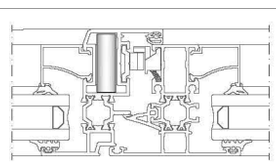	09-101-00	30.8 mm	58T-201-18 58T-201-20
CC-101-31.3		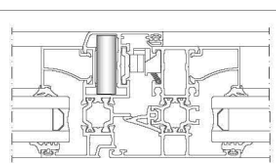	09-101-00	31.3 mm	58T-201-15
CC-103-04.6		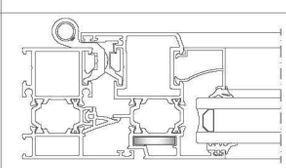	09-103-00	4.6 mm	58T-202-18 58T-202-20 58T-252-18 58T-404-18 58T-503-18
CC-103-04.9		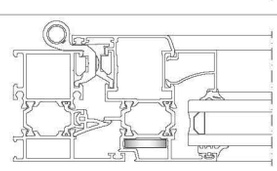	09-103-00	4.9 mm	58T-202-15 58T-252-15

CUTTED CORNER JOINTS / KESİLMİŞ KÖŞE TAKOZLAR

CODE / KOD	DRAWING / ÇİZİM	APPLICATION / UYGULAMA	PROFILE CODE PROFİL KOD	CUTTING SIZE KESİM ÖLÇÜSÜ	APPLICATION PROFILES ÇALIŞTIĞI PROFİLLER
CC-103-09.6		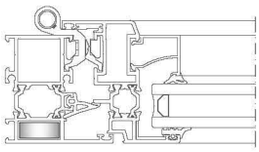	09-103-00	9.6 mm	58T-102-18 58T-122-18 58T-302-18 58T-302-20 58T-312-18 58T-322-18
CC-103-10.0		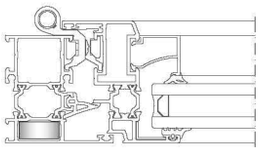	09-103-00	9.6 mm	58T-102-15 58T-112-15 58T-302-15 58T-312-15
CC-103-23.0		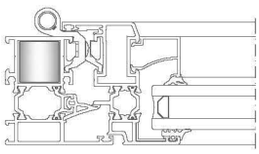	09-103-00	23.0 mm	58T-102-18 58T-122-18 58T-302-18 58T-312-18 58T-322-18 58T-404-18 58T-302-20
CC-103-23.4		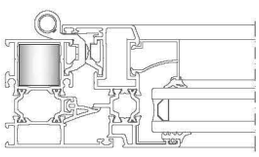	09-103-00	23.4 mm	58T-102-15 58T-112-15 58T-302-15 58T-312-15
CC-103-30.8		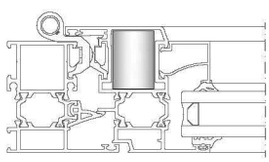	09-103-00	30.8 mm	58T-202-18 58T-202-20
CC-103-31.3		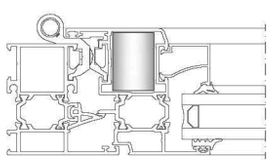	09-103-00	31.3 mm	58T-202-15
CC-105-04.6		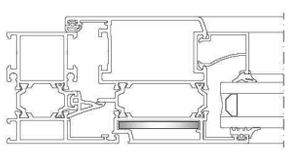	09-105-00	4.6 mm	58T-204-18 58T-205-18 58T-204-20 58T-205-20
CC-105-04.9		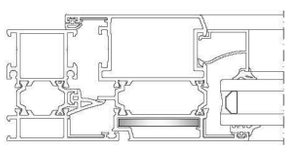	09-105-00	4.9 mm	58T-204-15 58T-205-15
CC-105-09.6		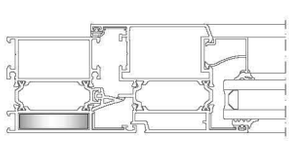	09-105-00	9.6 mm	58T-104-18 58T-304-18

CUTTED CORNER JOINTS / KESİLMİŞ KÖŞE TAKOZLAR

CODE / KOD	DRAWING / ÇİZİM	APPLICATION / UYGULAMA	PROFILE CODE PROFİL KOD	CUTTING SIZE KESİM ÖLÇÜSÜ	APPLICATION PROFILES ÇALIŞTIĞI PROFİLLER
CC-105-10.0		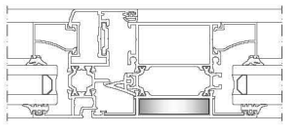	09-105-00	10 mm	58T-304-15
CC-105-23.0		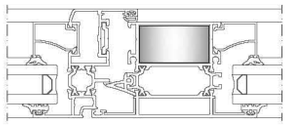	09-105-00	23 mm	58T-104-18 58T-304-18
CC-105-23.4		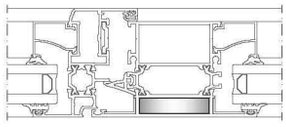	09-105-00	23.4 mm	58T-304-15
CC-105-23.6		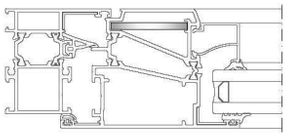	09-105-00	23.6 mm	58T-205-18 58T-205-20
CC-105-23.8		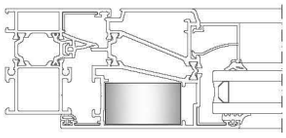	09-105-00	23.8 mm	58T-205-15
CC-105-30.8		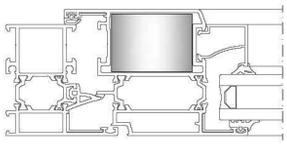	09-105-00	30.8 mm	58T-204-18 58T-204-20
CC-105-31.3		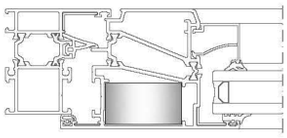	09-105-00	31.3 mm	58T-204-15
CC-110-31.0		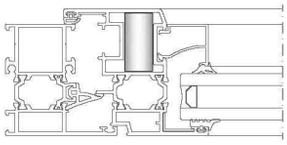	09-110-00	31.0 mm	58T-252-18
CC-110-31.3		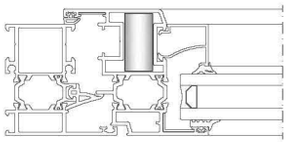	09-110-00	31.3 mm	58T-252-15
CC-113-04.5		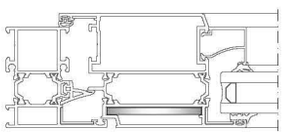	09-113-00	4.5 mm	58T-206-18 58T-207-18 58T-256-18

CUTTED CORNER JOINTS / KESİLMİŞ KÖŞE TAKOZLAR

CODE / KOD	DRAWING / ÇİZİM	APPLICATION / UYGULAMA	PROFILE CODE PROFİL KOD	CUTTING SIZE KESİM ÖLÇÜSÜ	APPLICATION PROFILES ÇALIŞTIĞI PROFİLLER
CC-113-23.5		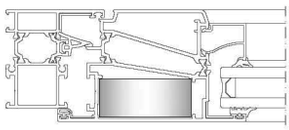	09-113-00	23.5 mm	58T-207-18
CC-113-31.0		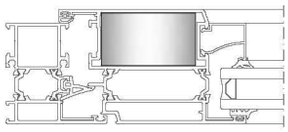	09-113-00	31 mm	58T-206-18
CC-114-09.6		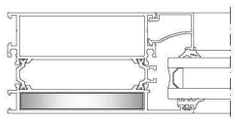	09-114-00	9.6 mm	58T-105-18 58T-305-18
CC-114-23.0		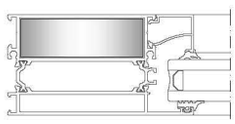	09-114-00	23 mm	58T-105-18 58T-305-18
CC-117-30.2		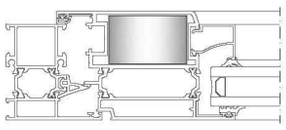	09-117-00	30.2 mm	58T-256-18
CC-121-05.0		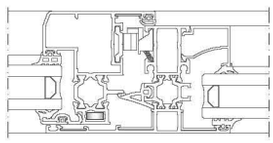	09-121-00	5 mm	58T-231-15
CC-122-04.8		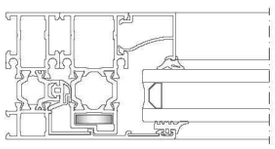	09-122-00	4.8 mm	58T-531-15
CC-122-09.6		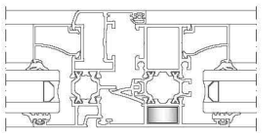	09-122-00	9.6 mm	58T-306-18
CC-122-23.0		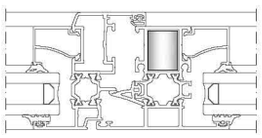	09-122-00	23 mm	58T-306-18
CC-122-23.4		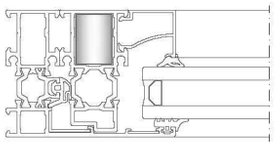	09-122-00	23.4 mm	58T-531-15

CUTTED CORNER JOINTS / KESİLMİŞ KÖŞE TAKOZLAR

CODE / KOD	DRAWING / ÇİZİM	APPLICATION / UYGULAMA	PROFILE CODE PROFİL KOD	CUTTING SIZE KESİM ÖLÇÜSÜ	APPLICATION PROFILES ÇALIŞTIĞI PROFİLLER
CC-122-31.3		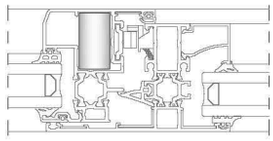	09-122-00	31.3 mm	58T-231-15
CC-123-09.5		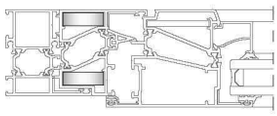	09-123-00	9.5 mm	58T-502-18
CC-123-31.0		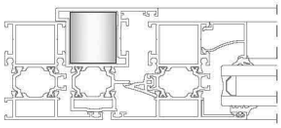	09-123-00	31 mm	58T-503-18
CC-124-04.6		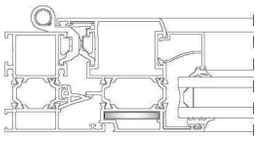	09-124-00	4.6 mm	58T-203-18 58T-215-18
CC-124-09.6		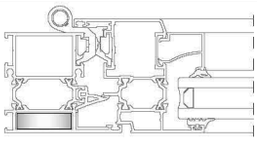	09-124-00	9.6 mm	58T-103-18 58T-113-18 58T-303-18
CC-124-23.0		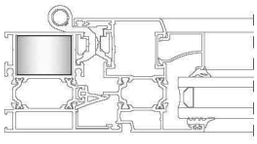	09-124-00	23 mm	58T-103-18 58T-113-18 58T-303-18
CC-124-23.5		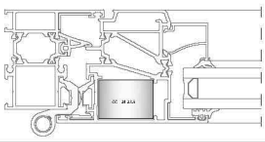	09-124-00	23.5 mm	58T-215-18
CC-124-30.8		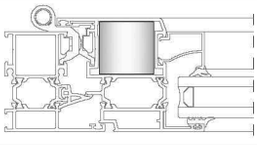	09-124-00	30.8 mm	58T-203-18

CORNER ACCESSORIES / KÖŞE BAĞLANTILAR

PACKAGE CODE PAKET KODU	DRAWING / ÇİZİM	APPLICATION / UYGULAMA	DESCRIPTION AÇIKLAMA	MATERIAL MALZEME	APPLICATION PROFILES ÇALIŞTIĞI PROFİLLER
EM58-21		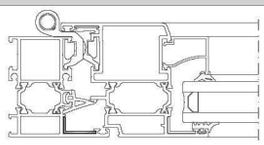	Corner Joint Köşe Bağlantı	PVC	All Frames & Mullions Tüm Kasa ve Orta Kayıtlar
EM58-22		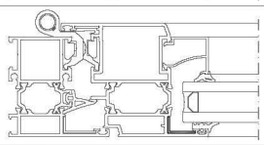	Corner Joint Köşe Bağlantı	PVC	All Vents Tüm Kanatlar
MK-20.1		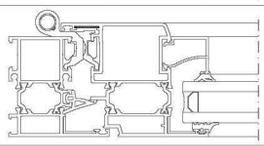	Corner Joint Köşe Bağlantı	METAL	All Vents Tüm Kanatlar
LC-122		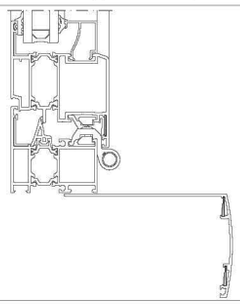	Corner Joint Köşe Bağlantı	DIE-CAST DÖKÜM	07-105-00

OTHER ACCESSORIES / DİĞER AKSESUARLAR

PACKAGE CODE PAKET KODU	DRAWING / ÇİZİM	APPLICATION UYGULAMA	APPLICATION PROFILES ÇALIŞTIĞI PROFİLLER	DESCRIPTION AÇIKLAMA	MATERIAL MALZEME
EM58T-501		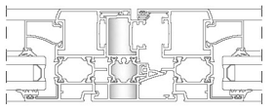	58T-501-18 58T-545-18	Adapter Cap Adaptör Kapağı	PVC
EM58T-551	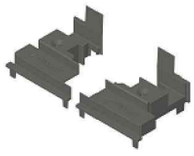	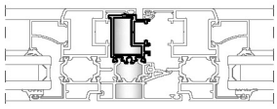	58T-551-18	Adapter Cap Adaptör Kapağı	PVC
EM58T-403	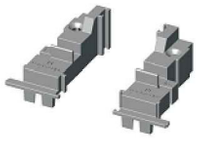	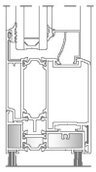	58T-403-18	Adapter Cap Adaptör Kapağı	PVC
EM58T-405	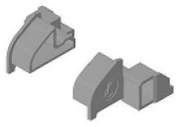	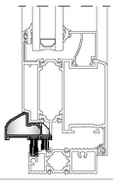	58T-405-00	**Inside Sash** İçe Açılır Kanat Dropper Cap Damlalık Kapağı	PVC
EM70T-406	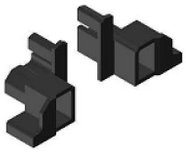	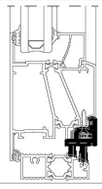	70T-406-00	**Outside Sash** Dışa Açılır Kanat Dropper Cap Damlalık Kapağı	PVC
EM58-520		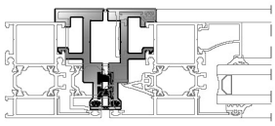	58T-503-18	Pivot Adapter Pivot Adaptör	Aluminium Alüminyum
EM08-111		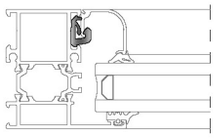	08-111-00	Glazing Bead Adapter Çıta Adaptörü	PVC
EM15-200	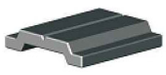	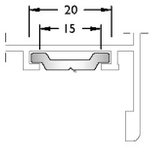	-	Polyamid Rod Profile (Euro Section 1) Polyamid Tij Profili (Avrupa Kanal 1)	Polyamid

OTHER ACCESSORIES / DİĞER AKSESUARLAR

PACKAGE CODE PAKET KODU	CODE / KOD	DESCRIPTION AÇIKLAMA	APPLICATION GASKET ÇALIŞTIĞI FİTİL	MATERIAL MALZEME
GTOOL-EM54-01		**GASKET TOOL** FİTİL APARATI	EM54-01	PVC

MONTAGE TO FRAME T JUNCTION / KASAYA ÇEKTİRME BAĞLANTI

APPLICATION PROFILES ÇALIŞTIĞI PROFİLLER	PACKAGE CODE PAKET KODU	PROFILE CODE PROFİL KOD	CUTTING SIZE KESİM ÖLÇÜSÜ	A SCREW QUANTITY VİDA ADET
58T-301-18 58T-301-15 58T-301-20 58T-331-15 58T-335-15	CC-901-10.5 CC-903-10.5	09-901-00 09-903-00	10.5 mm	1
58T-306-18	CC-901-17.4 CC-903-17.4	09-901-00 09-903-00	17.4 mm	2
58T-302-18 58T-312-18 58T-322-18 58T-302-15 58T-312-15 58T-302-20 58T-332-15	CC-901-22.5 CC-903-22.5	09-901-00 09-903-00	22.5 mm	2

APPLICATION PROFILES ÇALIŞTIĞI PROFİLLER	PACKAGE CODE PAKET KODU	PROFILE CODE PROFİL KOD	CUTTING SIZE KESİM ÖLÇÜSÜ	A SCREW QUANTITY VİDA ADET
58T-303-18	CC-901-32.4 CC-903-32.4	09-901-00 09-903-00	32.4 mm	2
58T-304-18 58T-304-15	CC-901-42.8 CC-903-42.8	09-901-00 09-903-00	42.8 mm	2
58T-305-18 58T-105-18	CC-901-71.9 CC-903-71.9	09-901-00 09-903-00	71.9 mm	2
58T-402-18	CC-901-65.7 CC-903-67.7	09-901-00 09-903-00	65.7 mm 67.7 mm	2

APPLICATION / UYGULAMA

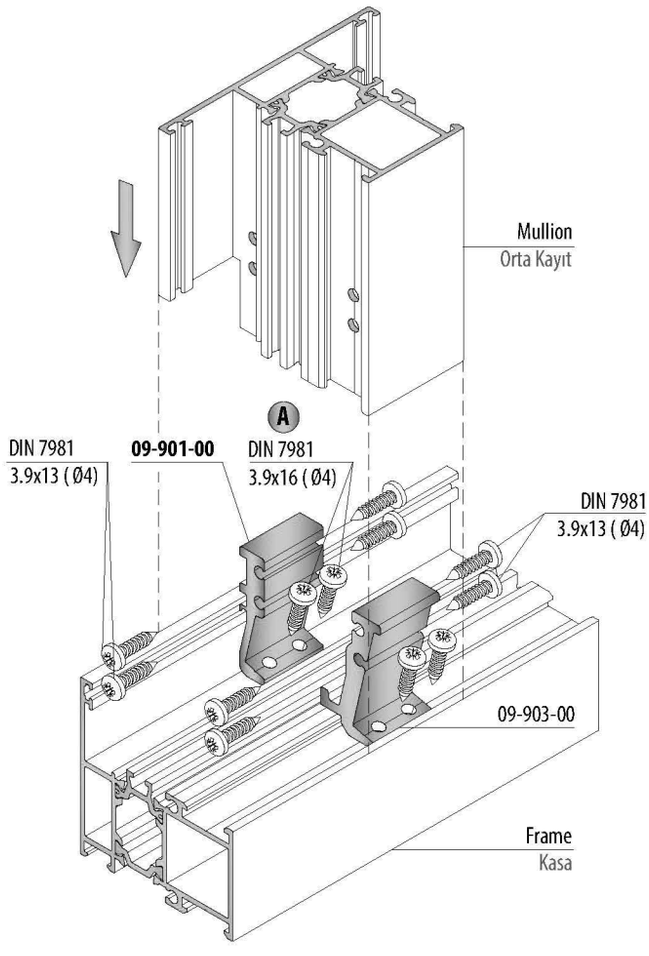

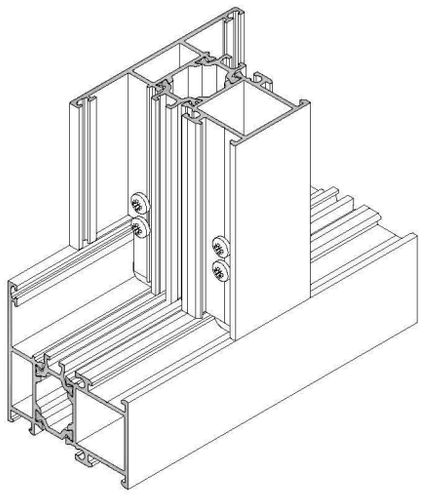

MONTAGE TO SASH T JUNCTION / KANAT ÇEKTİRME BAĞLANTI

APPLICATION PROFILES ÇALIŞTIĞI PROFİLLER	PACKAGE CODE PAKET KODU	PROFILE CODE PROFİL KOD	CUTTING SIZE KESİM ÖLÇÜSÜ	A SCREW QUANTITY VİDA ADET
58T-301-18 58T-301-15 58T-301-20 58T-331-15 58T-335-15	CC-902-10.5 CC-903-10.5	09-902-00 09-903-00	10.5 mm	1
58T-306-18	CC-902-17.4 CC-903-17.4	09-902-00 09-903-00	17.4 mm	2
58T-302-18 58T-312-18 58T-322-18 58T-302-15 58T-312-15 58T-302-20 58T-332-15	CC-902-22.5 CC-903-22.5	09-902-00 09-903-00	22.5 mm	2

APPLICATION PROFILES ÇALIŞTIĞI PROFİLLER	PACKAGE CODE PAKET KODU	PROFILE CODE PROFİL KOD	CUTTING SIZE KESİM ÖLÇÜSÜ	A SCREW QUANTITY VİDA ADET
58T-303-18	CC-902-32.4 CC-903-32.4	09-902-00 09-903-00	32.4 mm	2
58T-304-18 58T-304-15	CC-902-42.8 CC-903-42.8	09-902-00 09-903-00	42.8 mm	2
58T-305-18 58T-105-18	CC-902-71.9 CC-903-71.9	09-902-00 09-903-00	71.9 mm	2
58T-402-18	CC-902-65.7 CC-903-67.7	09-902-00 09-903-00	65.7 mm 67.7 mm	2
58T-412-18	CC-902-40.0 CC-903-40.0	09-902-00 09-903-00	40.0 mm 40.0 mm	2

APPLICATION / UYGULAMA

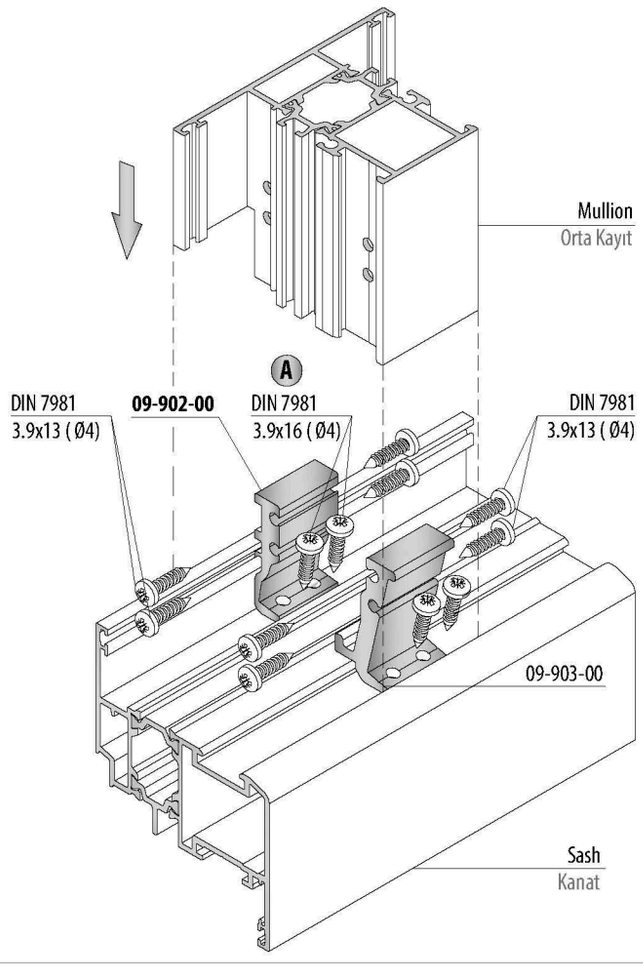

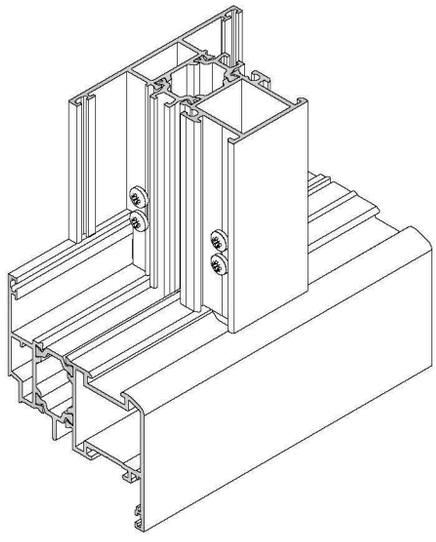

58T

CUTTING SIZE / KESİM ÖLÇÜLERİ

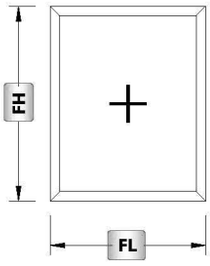

GLASS / CAM

Code Kod	Drawing Çizim	Quantity Miktar	Dimensions (mm) Boyutlar
Glass Cam		1 Pcs / Adet	GL = FL - (A1+A1) - 14
			GH = FH - (A1+A1) - 14

PROFILES / PROFİLLER

Code Kod	Drawing Çizim	Cut Kesim	Quantity Miktar	Dimensions (mm) Boyutlar
58T-102-18			2 Pcs / Adet	FL
			2 Pcs / Adet	FH
08-109-00			2 Pcs / Adet	CL = FL - (A1+A1)
			2 Pcs / Adet	CH = FH - (A1+A1+22+22)

CONNECTIONS / BAĞLANTILAR

Code Kod	Quantity Miktar	Picture Resim
CC-103-23.0	4 Pcs / Adet	
CC-103-09.6	4 Pcs / Adet	
EM58-21	4 Pcs / Adet	

GASKETS / FİTİLLER

Code Kod	Quantity Miktar	Picture Resim
EM1-XX	2SL + 2SH	
EM2-03	2SL + 2SH	

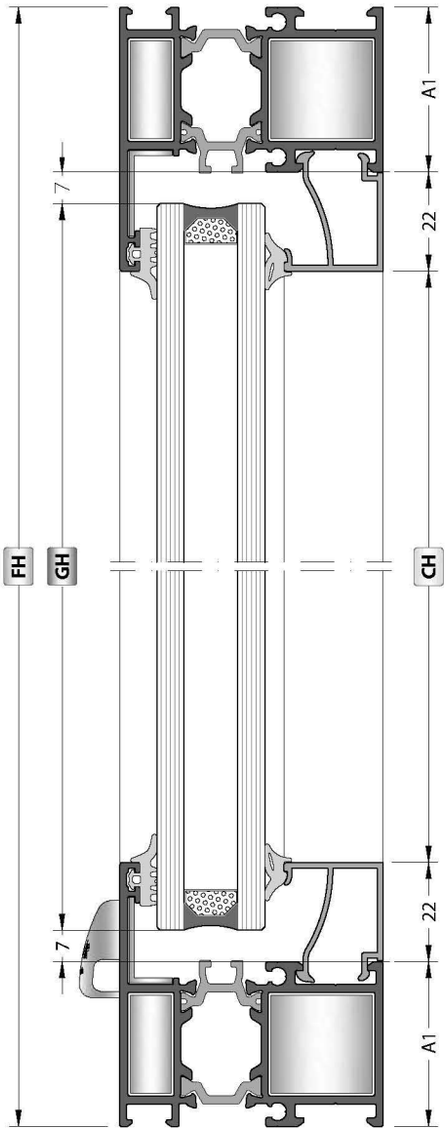

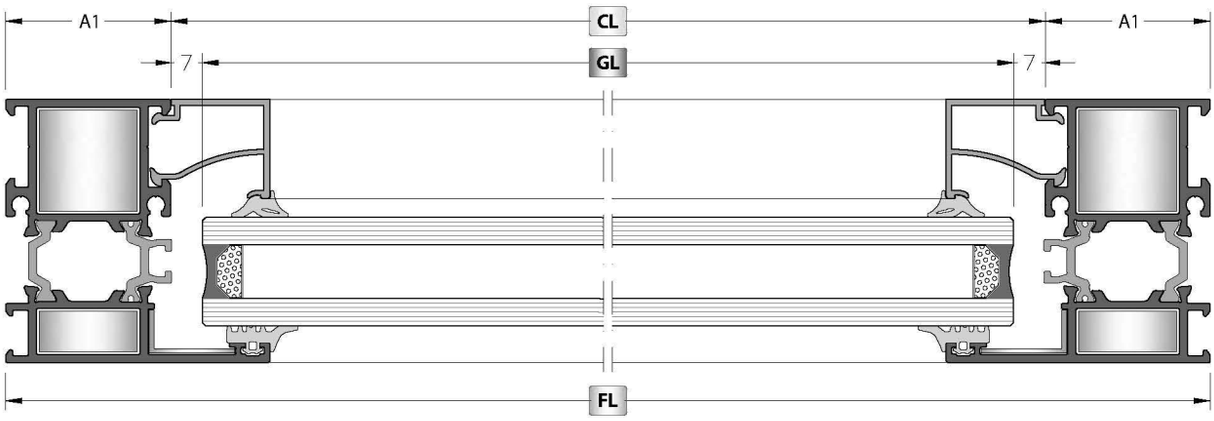

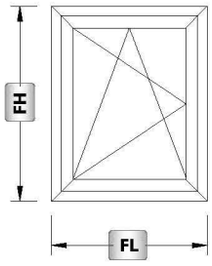

GLASS / CAM

Code Kod	Drawing Çizim	Quantity Miktar	Dimensions (mm) Boyutlar
Glass **Cam**		1 Pcs / Adet	GL = SL - (A2+A2) - 14
			GH = SH - (A2+A2) - 14

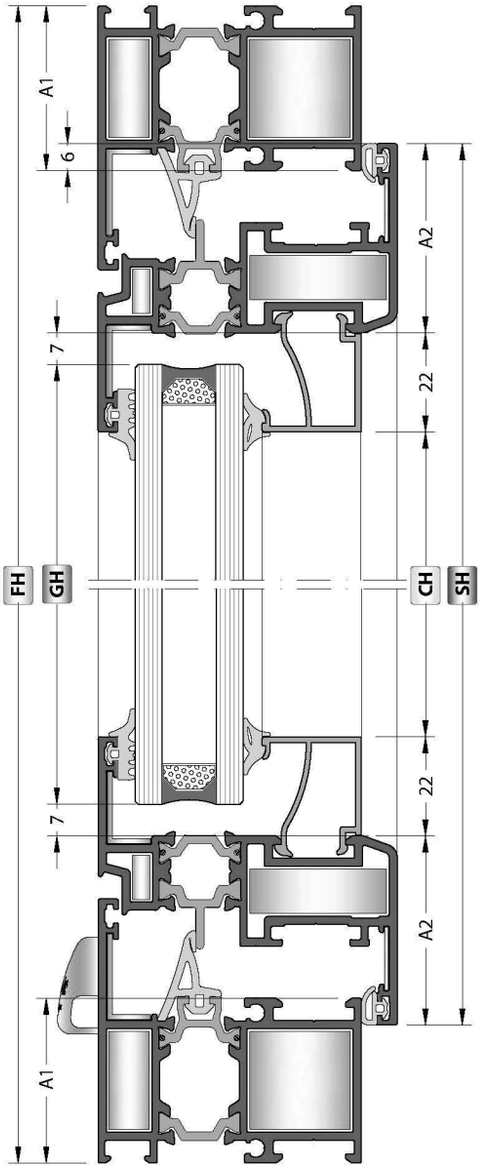

PROFILES / PROFİLLER

Code Kod	Drawing Çizim	Cut Kesim	Quantity Miktar	Dimensions (mm) Boyutlar
58T-102-18			2 Pcs / Adet	FL
			2 Pcs / Adet	FH
58T-201-18			2 Pcs / Adet	SL = FL - (A1+A1) + 12
			2 Pcs / Adet	SH = FH - (A1+A1) + 12
08-109-00			2 Pcs / Adet	CL = SL - (A2+A2)
			2 Pcs / Adet	CH = SH - (A2+A2+22+22)

CONNECTIONS / BAĞLANTILAR

Code Kod	Quantity Miktar	Picture Resim
CC-103-23.0	4 Pcs / Adet	
CC-103-09.6	4 Pcs / Adet	
CC-101-30.8	4 Pcs / Adet	
CC-101-04.6	4 Pcs / Adet	
EM58-21	4 Pcs / Adet	
EM58-22	4 Pcs / Adet	
MK-20.1	4 Pcs / Adet	
EM54-C01	4 Pcs / Adet	

GASKETS / FİTİLLER

Code Kod	Quantity Miktar	Picture Resim
EM1-XX	2SL + 2SH	
EM2-03	2SL + 2SH	
EM54-01	2SL + 2SH	
EM3-01	2SL + 2SH	

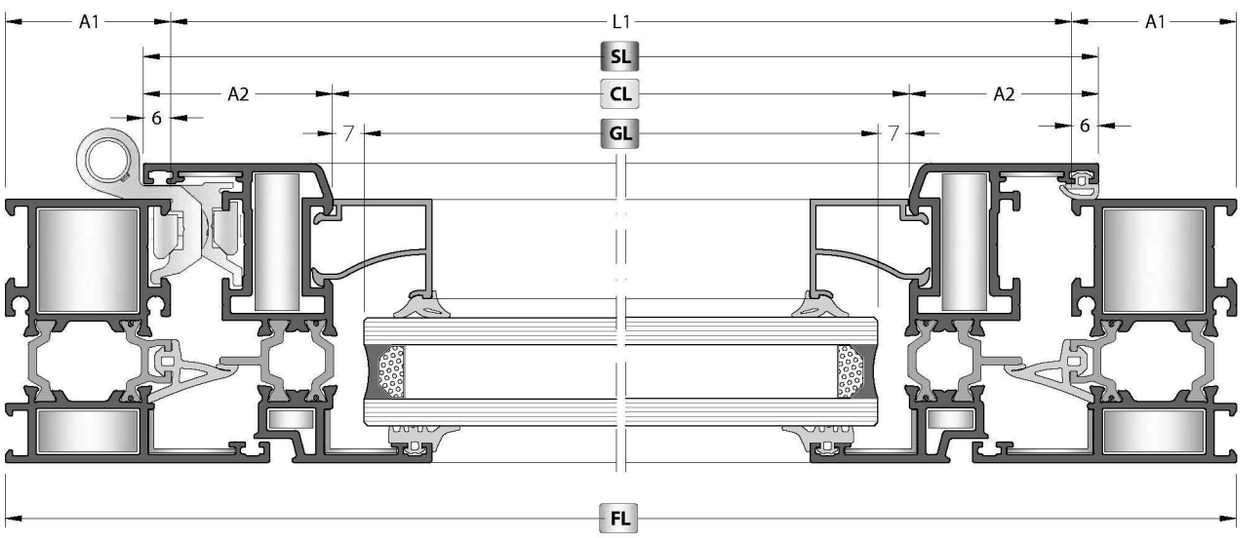

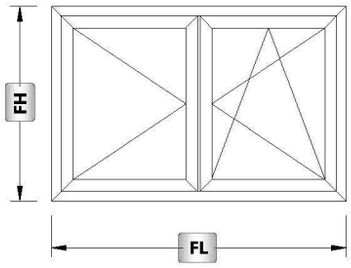

GLASS / CAM

Code Kod	Drawing Çizim	Quantity Miktar	Dimensions (mm) Boyutlar
Glass **Cam**		2 Pcs / Adet	GL = SL - (A2+A2) - 14
			GH = SH - (A2+A2) - 14

PROFILES / PROFİLLER

Code Kod	Drawing Çizim	Cut Kesim	Quantity Miktar	Dimensions (mm) Boyutlar
58T-102-18			2 Pcs / Adet	FL
			2 Pcs / Adet	FH
58T-201-18			4 Pcs / Adet	$SL = \frac{FL - (A1 + A1) + 7}{2}$
			4 Pcs / Adet	SH = FH - (A1+A1) + 12
58T-501-18			1 Pcs / Adet	AH = SH - 70
08-109-00			4 Pcs / Adet	CL = SL - (A2+A2)
			4 Pcs / Adet	CH = SH - (A2+A2+22+22)

CONNECTIONS / BAĞLANTILAR

Code Kod	Quantity Miktar	Picture Resim
CC-103-23.0	4 Pcs / Adet	
CC-103-09.6	4 Pcs / Adet	
CC-101-30.8	8 Pcs / Adet	
CC-101-04.6	8 Pcs / Adet	
EM58-21	4 Pcs / Adet	
EM58-22	8 Pcs / Adet	
MK-20.1	8 Pcs / Adet	
EM58T-501	1 Set / Takım	
EM54-C01	4 Pcs / Adet	

GASKETS / FİTİLLER

Code Kod	Quantity Miktar	Picture Resim
EM1-XX	2SL + 4SH	
EM2-03	2SL + 4SH	
EM54-01	2SL + 3SH	
EM3-01	2SL + 3SH	

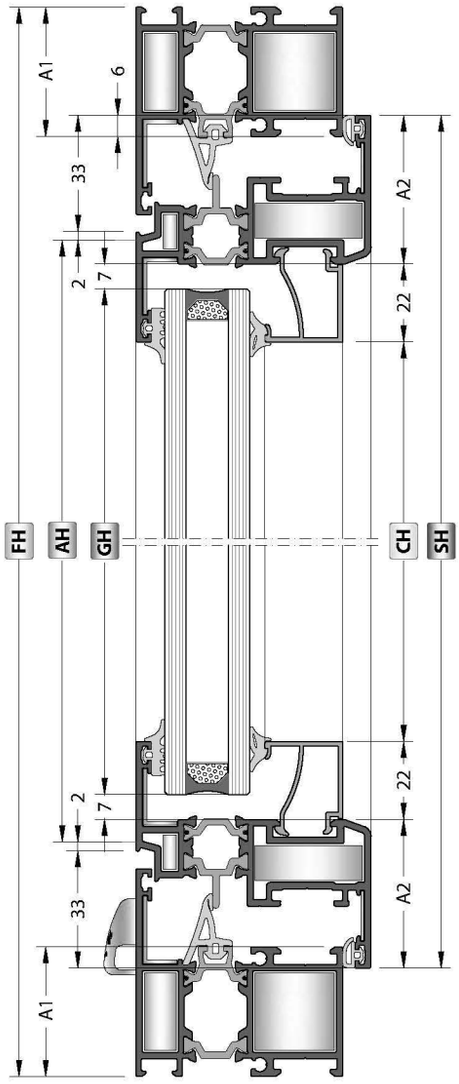

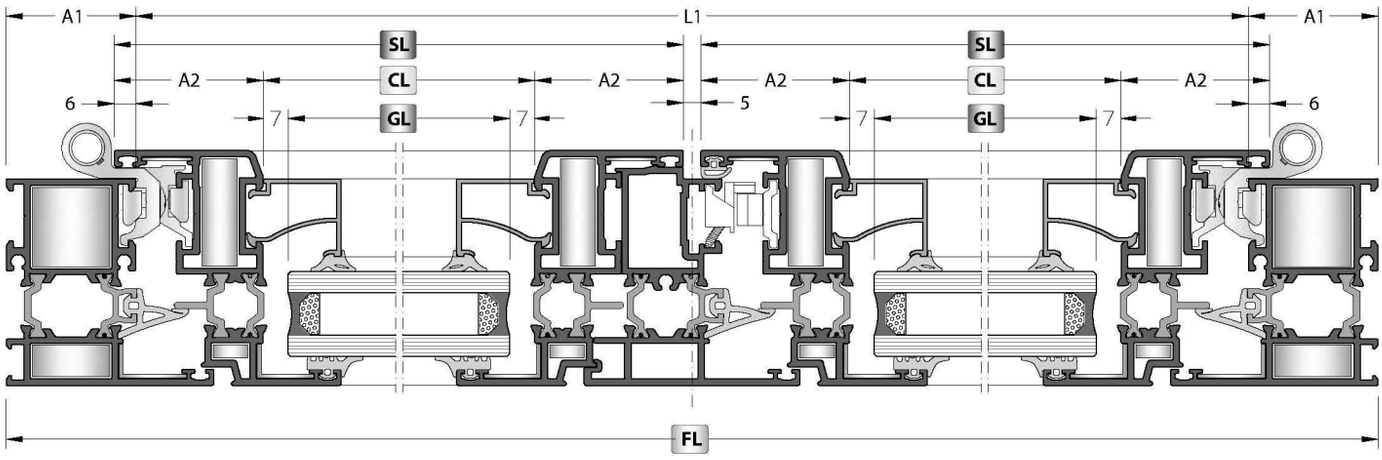

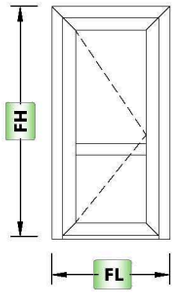

* **Depend to mullion position**
Orta kayıt pozisyonuna bağlıdır.

GLASS / CAM

Code Kod	Drawing Çizim	Quantity Miktar	Dimensions (mm) Boyutlar
Glass **Cam**		2 Pcs / Adet	GL = SL - (A2+A2) - 14
			*

PROFILES / PROFİLLER

Code Kod	Drawing Çizim	Cut Kesim	Quantity Miktar	Dimensions (mm) Boyutlar
58T-102-18			1 Pcs / Adet	FL
			1 Pcs / Adet	FH
			1 Pcs / Adet	FH
58T-204-18	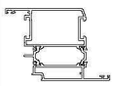		2 Pcs / Adet	SL = FL - (A1+A1) + 12
			2 Pcs / Adet	SH = FH - (A1+10) + 6
58T-302-18			1 Pcs / Adet	ML = SL - (A2+A2)
08-109-00			4 Pcs / Adet	CL = SL - (A2+A2)
			4 Pcs / Adet	*
58T-403-18			1 Pcs / Adet	AL = SL - 70

CONNECTIONS / BAĞLANTILAR

Code Kod	Quantity Miktar	Picture Resim
CC-103-23.0	2 Pcs / Adet	
CC-103-09.6	2 Pcs / Adet	
CC-105-30.8	4 Pcs / Adet	
CC-105-04.6	4 Pcs / Adet	
CC-902-22.5	2 Pcs / Adet	
CC-903-22.5	2 Pcs / Adet	
EM58-21	2 Pcs / Adet	
EM58-22	4 Pcs / Adet	
MK-20.1	4 Pcs / Adet	

CONNECTIONS / BAĞLANTILAR

Code Kod	Quantity Miktar	Picture Resim
EM58T-403	1 Set / Takım	
EM54-C01	2 Pcs / Adet	

GASKETS / FİTİLLER

Code Kod	Quantity Miktar	Picture Resim
EM1-XX	4SL + 2SH	
EM2-03	4SL + 2SH	
EM54-01	1SL + 2SH	
EM3-01	1SL + 2SH	
PB-7-1000	2SL	

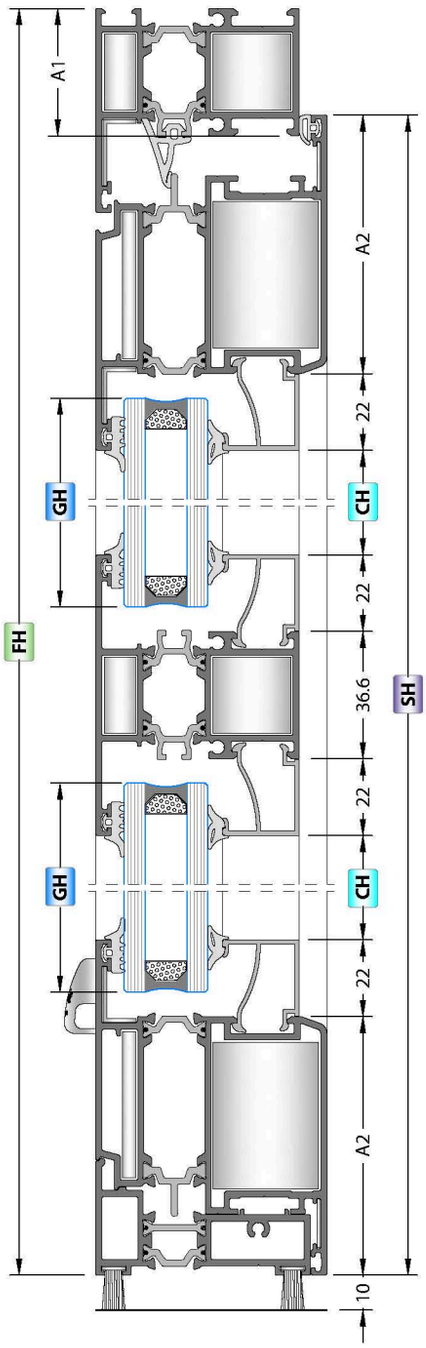

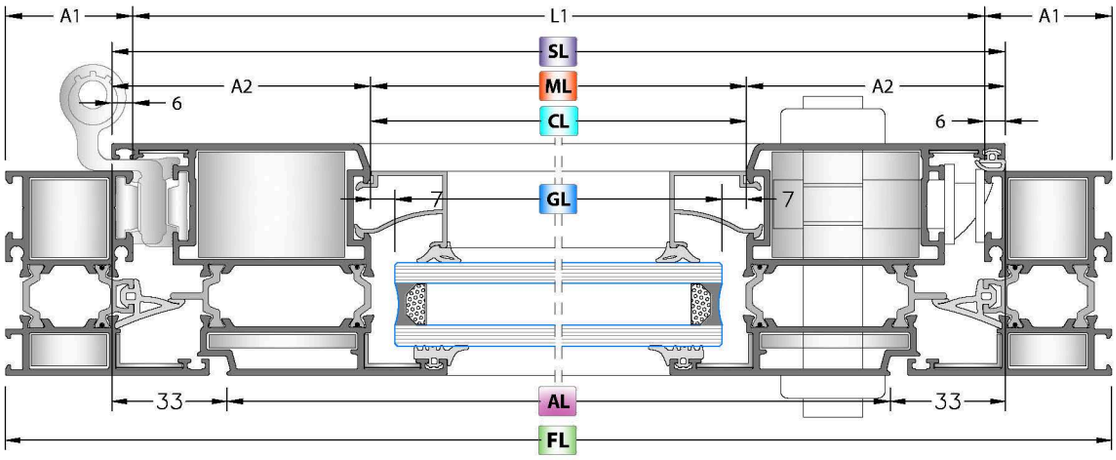

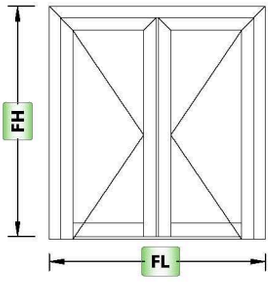

GLASS / CAM

Code Kod	Drawing Çizim	Quantity Miktar	Dimensions (mm) Boyutlar
Glass **Cam**		2 Pcs / Adet	GL = SL - (A2+A2) + 30 GH = SH - (A2+130) + 30

PROFILES / PROFİLLER

Code Kod	Drawing Çizim	Cut Kesim	Quantity Miktar	Dimensions (mm) Boyutlar
58T-102-18			1 Pcs / Adet	FL
			1 Pcs / Adet	FH
			1 Pcs / Adet	FH
58T-205-18	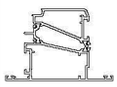		2 Pcs / Adet	$SL = \frac{FL - (A1 + A1) + 7}{2}$
			2 Pcs / Adet	SH = FH - (A1+12) + 6
			2 Pcs / Adet	SH = FH - (A1+12) + 6
58T-501-18			1 Pcs / Adet	AH = SH - 35
58T-402-18			2 Pcs / Adet	ML = CL
08-109-00			4 Pcs / Adet	CL = SL - (A2+A2) + 44
			4 Pcs / Adet	CH = SH - (130+A2)
20-101-00			1 Pcs / Adet	L1

CONNECTIONS / BAĞLANTILAR

Code Kod	Quantity Miktar	Picture Resim
CC-103-23.0	2 Pcs / Adet	
CC-103-09.6	2 Pcs / Adet	
CC-105-23.6	4 Pcs / Adet	
CC-105-04.6	4 Pcs / Adet	
CC-902-65.7	2 Pcs / Adet	
CC-903-67.7	2 Pcs / Adet	
EM58-21	2 Pcs / Adet	
EM58-22	4 Pcs / Adet	
MK-20.1	4 Pcs / Adet	
EM58T-501	1 Set / Takım	

CONNECTIONS / BAĞLANTILAR

Code Kod	Quantity Miktar	Picture Resim
EM54-C01	2 Pcs / Adet	

GASKETS / FİTİLLER

Code Kod	Quantity Miktar	Picture Resim
EM1-XX	4SL + 4SH	
EM2-03	4SL + 4SH	
EM54-01	1SL + 3SH	
EM3-01	2SL + 3SH	
AKF-195 B	2SL	

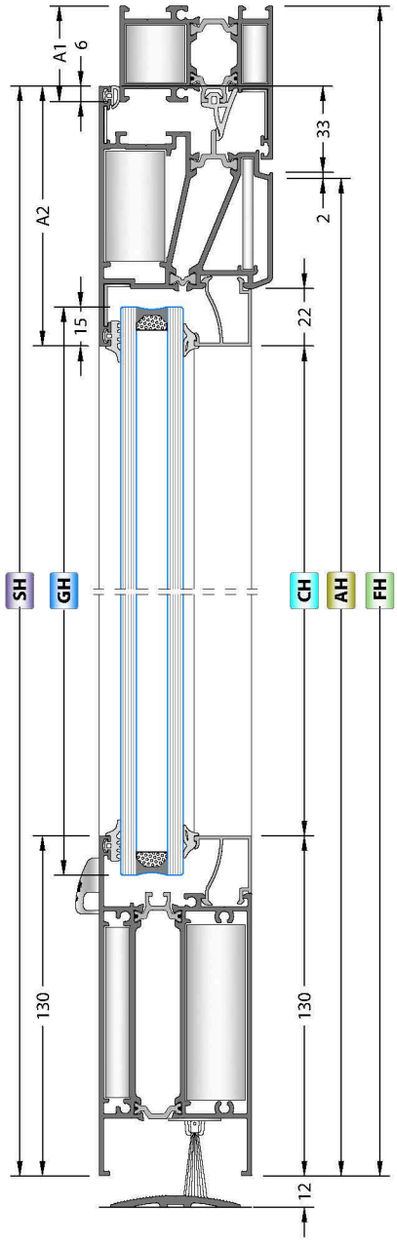

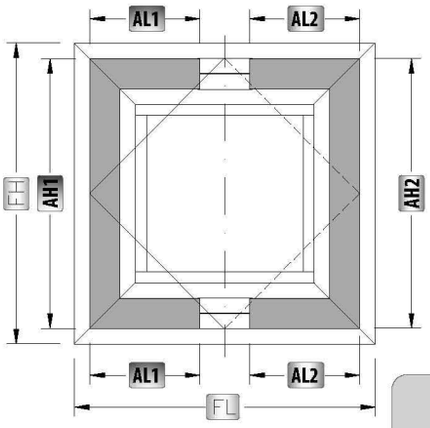

GLASS / CAM

Code Kod	Drawing Çizim	Quantity Miktar	Dimensions (mm) Boyutlar
Glass **Cam**		1 Pcs / Adet	GL = SL - (A2+A2) - 14 GH = SH - (A2+A2) - 14

PROFILES / PROFİLLER

Code Kod	Drawing Çizim	Cut Kesim	Quantity Miktar	Dimensions (mm) Boyutlar
58T-102-18			2 Pcs / Adet	FL
			2 Pcs / Adet	FH
58T-302-18			2 Pcs / Adet	SL = FL - (A1+A1) - 54
			2 Pcs / Adet	SH = FH - (A1+A1) - 54
AL1 **58T-503-18**		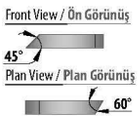	2 Pcs / Adet	$AL1 = \frac{FL}{2} - 43.6 - A1$
			1 Pcs / Adet	AH1 = FH - (A1+A1) + 12
AL2 **58T-503-18**		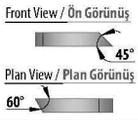	2 Pcs / Adet	$AL2 = \frac{FL}{2} - 43.6 - A1$
			1 Pcs / Adet	AH2 = FH - (A1+A1) + 12
08-109-00			2 Pcs / Adet	CL = SL - (A2+A2)
			2 Pcs / Adet	CH = SH - (A2+A2+22+22)

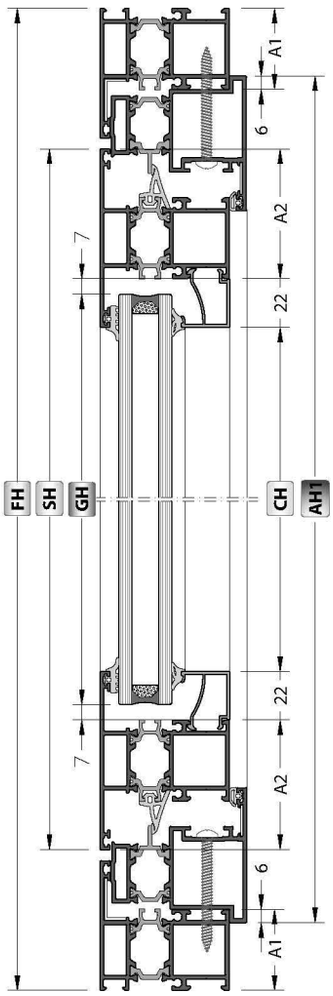

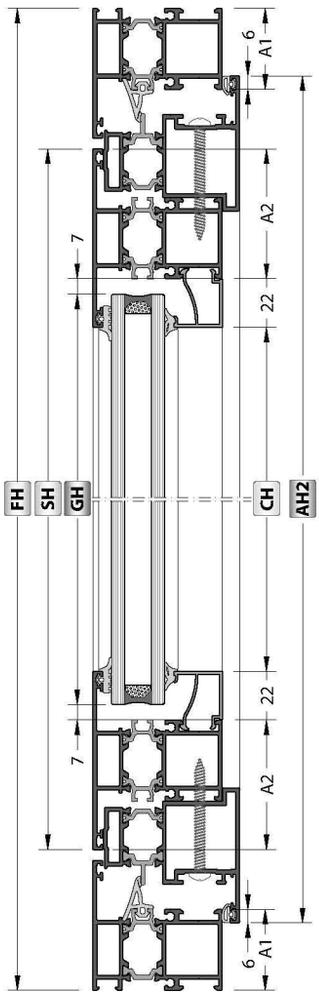

CONNECTIONS / BAĞLANTILAR

Code Kod	Quantity Miktar	Picture Resim
CC-103-23.0	8 Pcs / Adet	
CC-103-09.6	8 Pcs / Adet	
CC-123-31.0	4 Pcs / Adet	
CC-103-04.6	4 Pcs / Adet	
EM58-21	8 Pcs / Adet	
MK-20.1	4 Pcs / Adet	
EM54-C01	2 Pcs / Adet	

CONNECTIONS / BAĞLANTILAR

Code Kod	Quantity Miktar	Picture Resim
EM58-520	2 Pcs / Adet	

GASKETS / FİTİLLER

Code Kod	Quantity Miktar	Picture Resim
EM1-XX	2SL + 2SH	
EM2-03	2SL + 2SH	
EM54-01	2SL + 2SH	
EM3-01	2SL + 2SH	

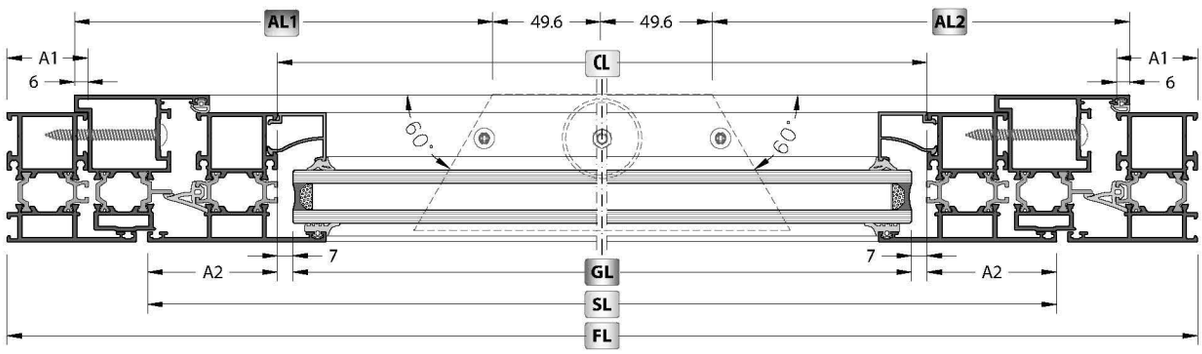

58T

ASSEMBLY DETAILS / MONTAJ DETAYLARI

FRAME ASSEMBLY / KASA UYGULAMA

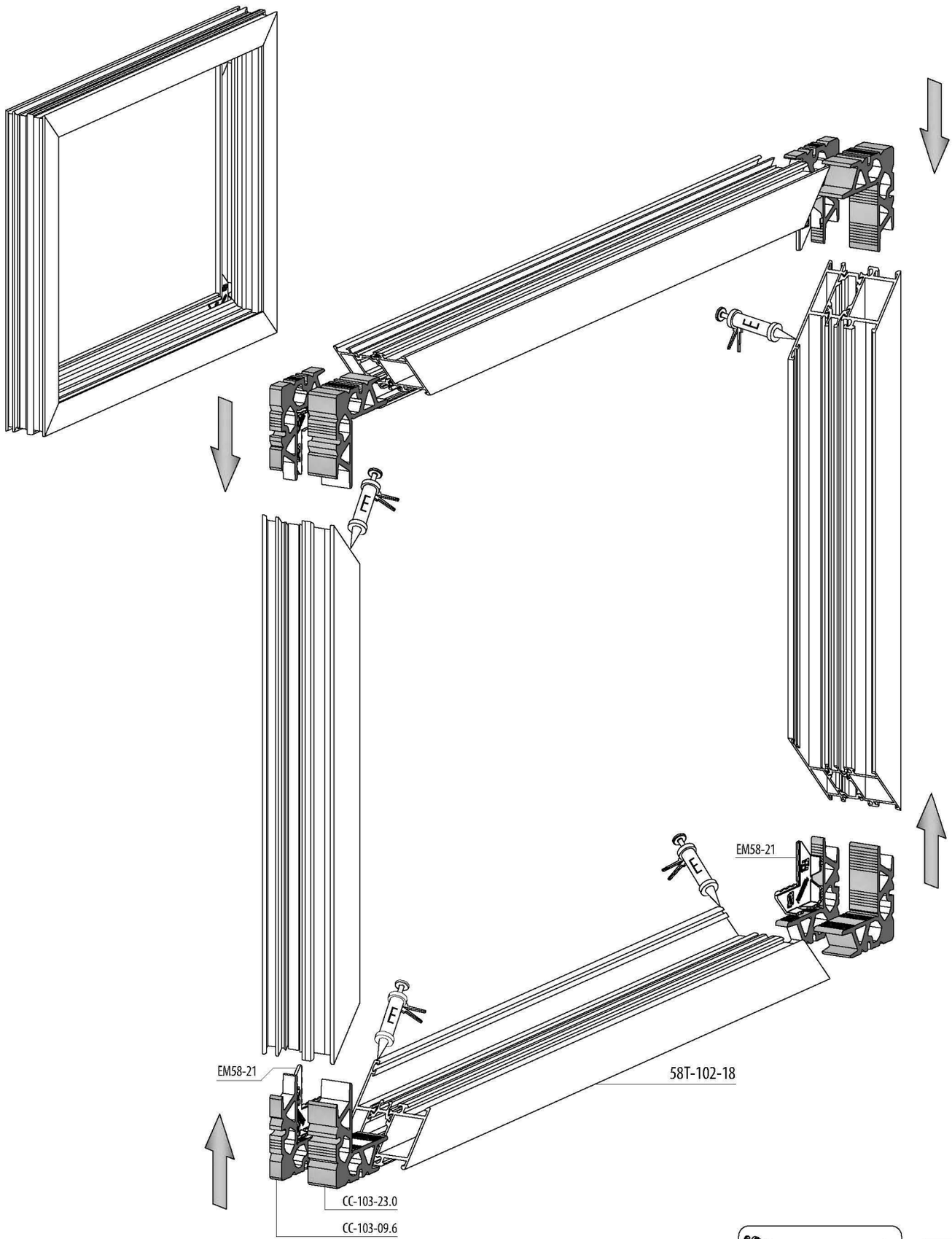

SASH ASSEMBLY / KANAT UYGULAMA

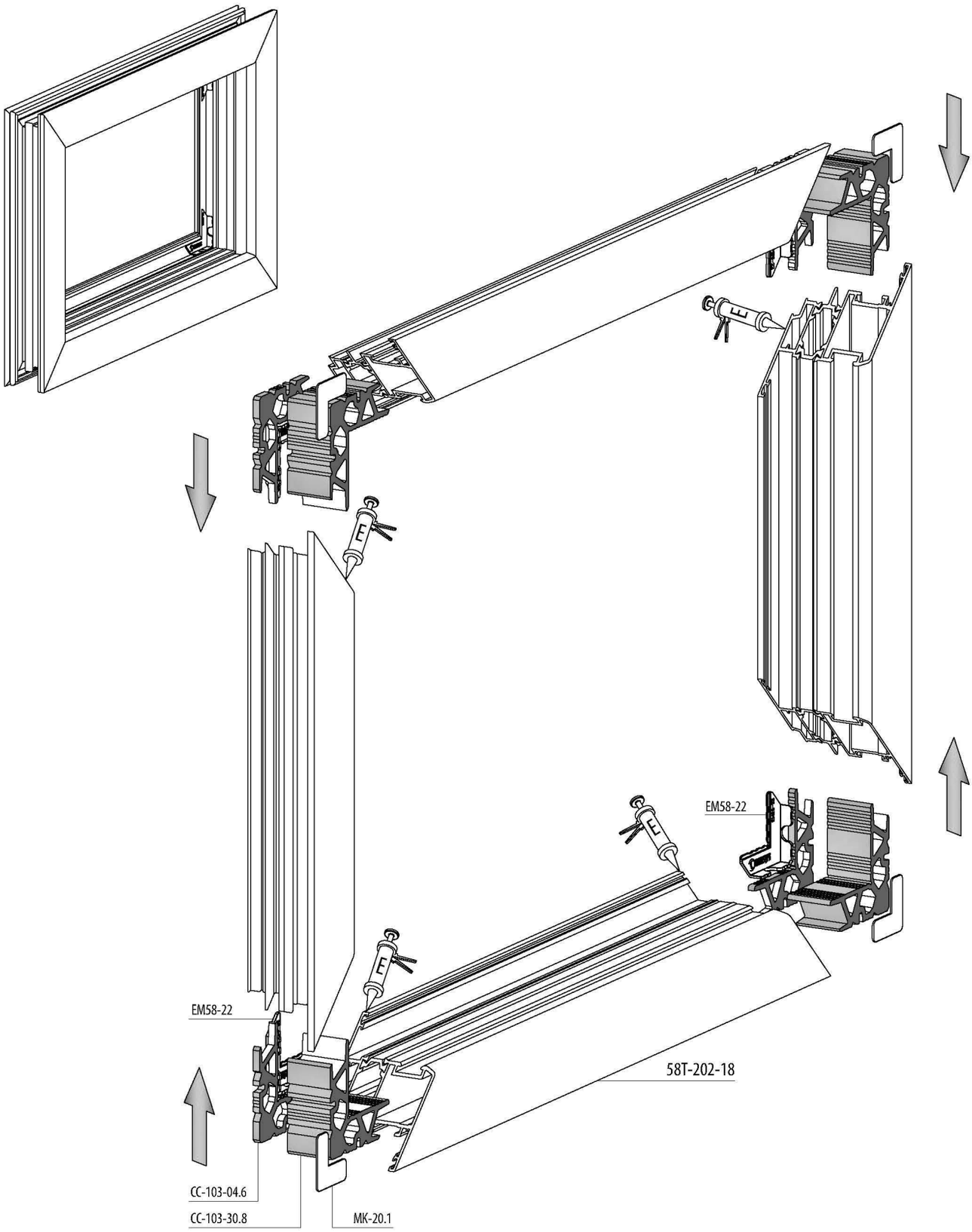

CENTRAL GASKET ENJECTION CORNER
TOZLUK FİTİLİ ENJEKSİYON KÖŞE

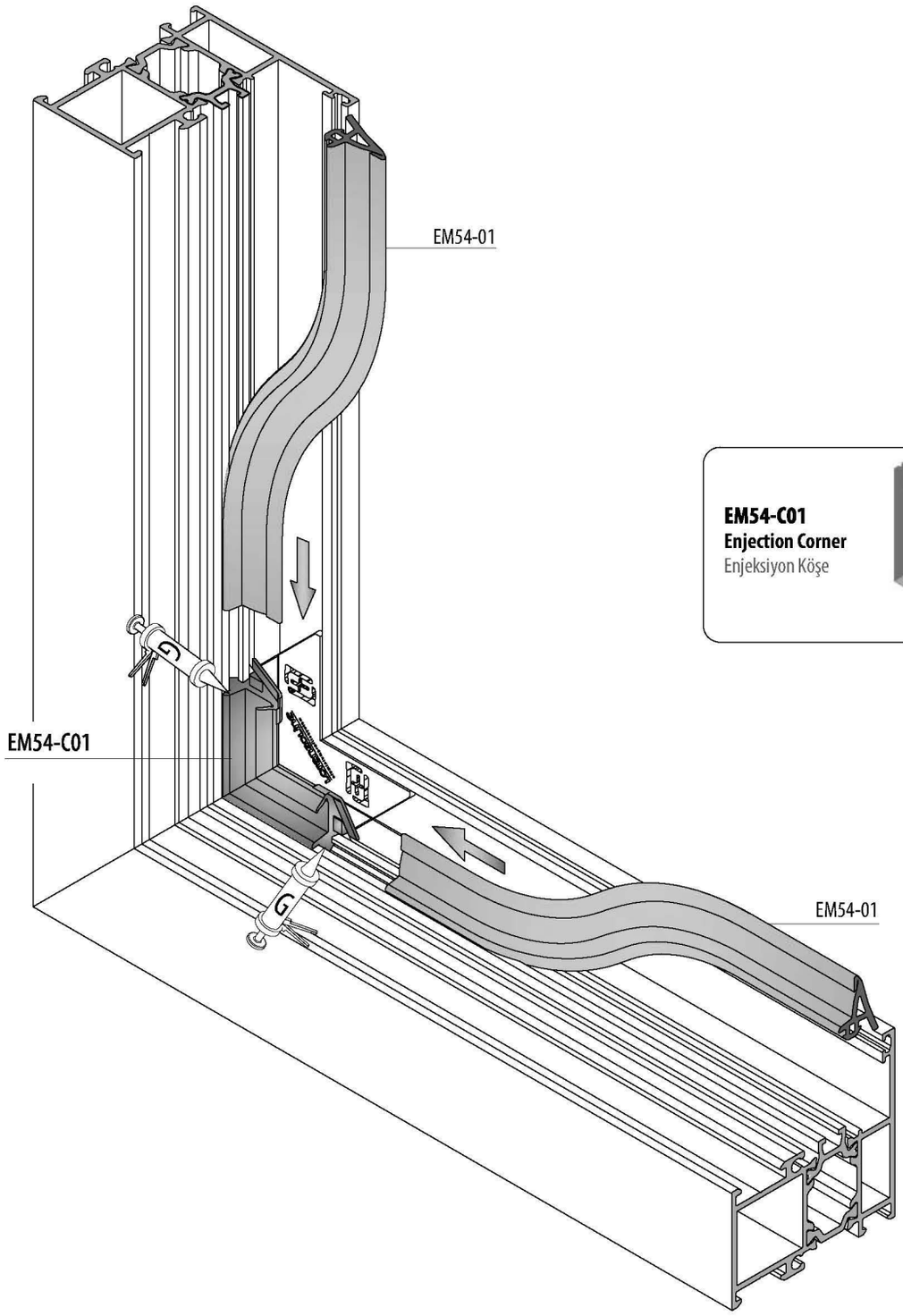

EM54-C01
Enjection Corner
Enjeksiyon Köşe



G = EPDM GLUE
EPDM YAPIŞTIRICI

GLAZING BEAD APPLICATION TYPES / CAM ÇITA UYGULAMA ÇEŞİTLERİ

Vertical / Düşey : **Flat** - Düz
Horizontal / Yatay : **Flat** - Düz

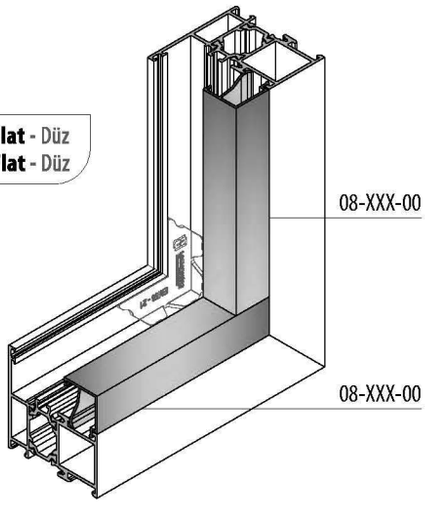

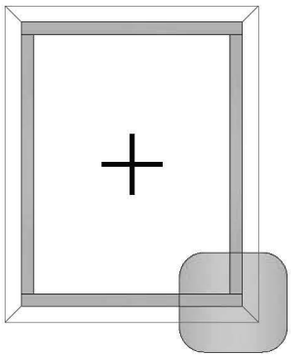

Vertical / Düşey : **Oval**
Horizontal / Yatay : **Flat** - Düz

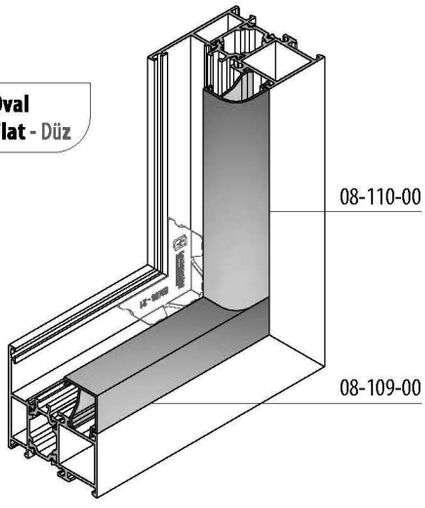

Vertical / Düşey : **Flat** - Düz
Horizontal / Yatay : **Oval**

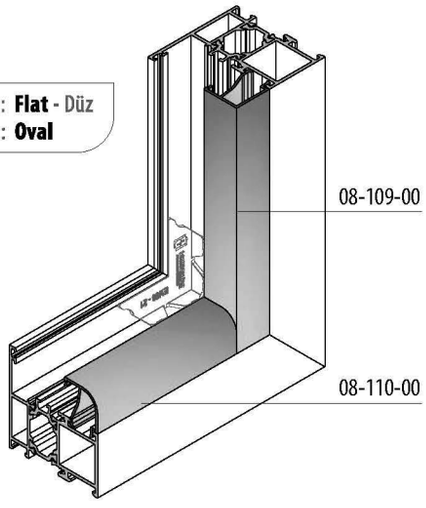

Vertical / Düşey : **Oval**
Horizontal / Yatay : **Oval**

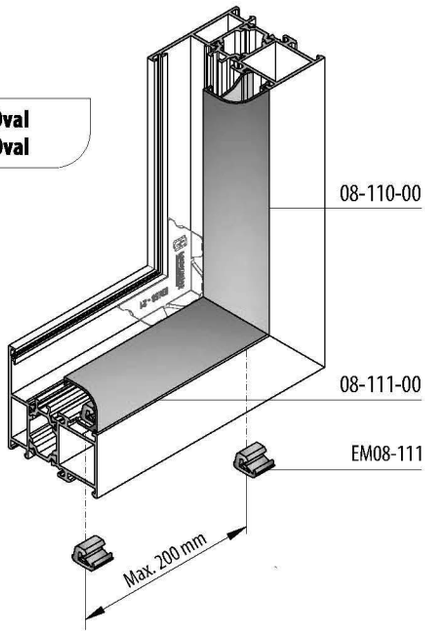

Vertical / Düşey : **Oval**
Horizontal / Yatay : **Oval**

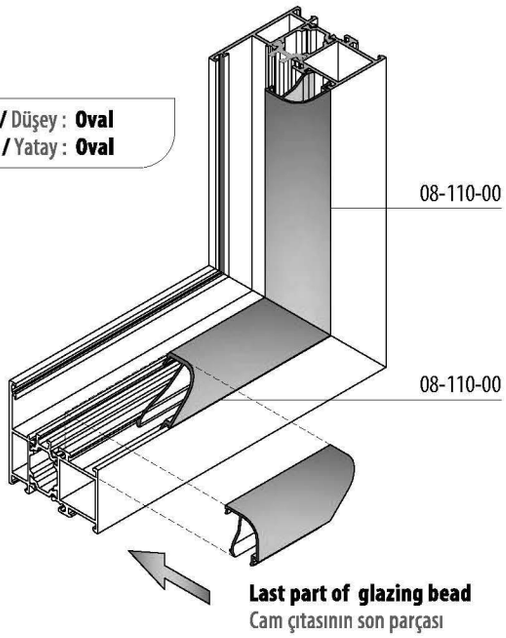

DRANAIGE HOLES / TAHLİYE DELİKLERİ

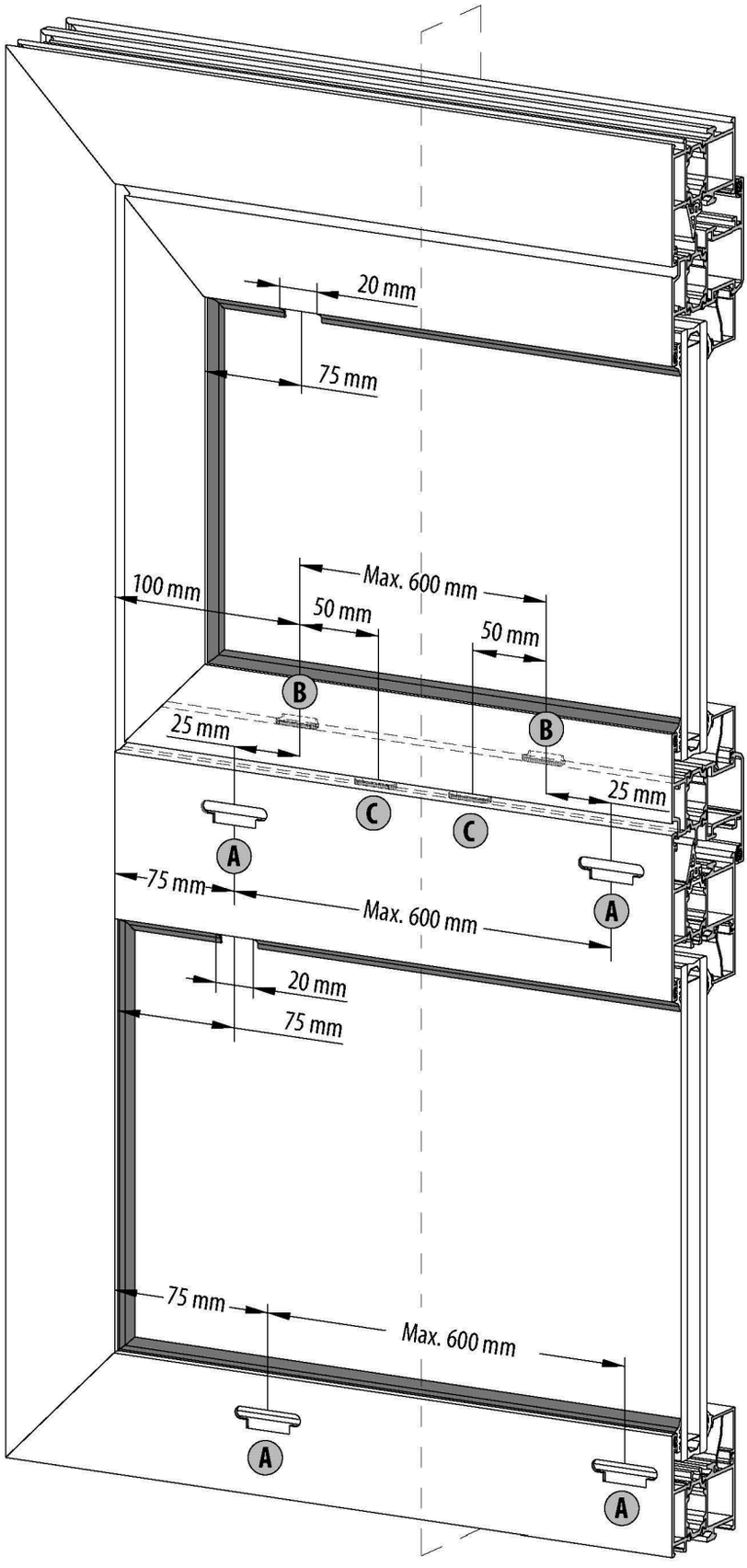

A

SLOT DIMENSIONS / SLOT ÖLÇÜLERİ

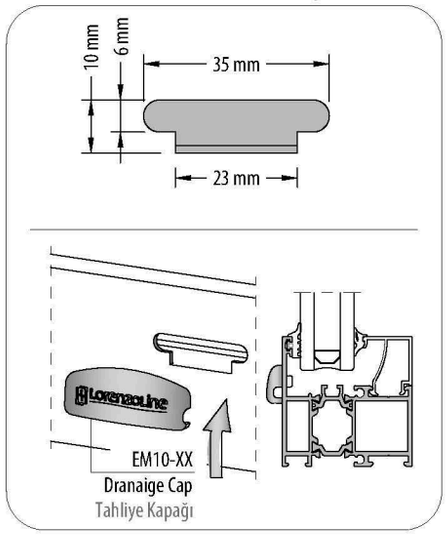

B

SLOT DIMENSIONS / SLOT ÖLÇÜLERİ

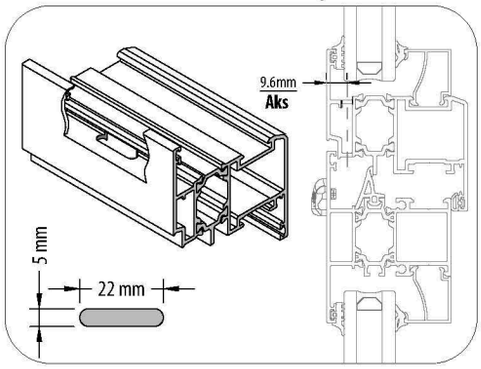

C

SLOT DIMENSIONS / SLOT ÖLÇÜLERİ

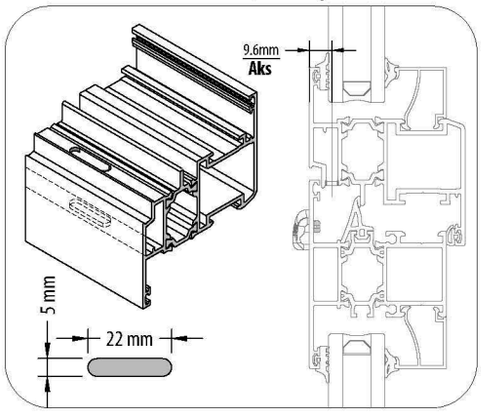

DOUBLE SASH ADAPTER CAP / ÇİFT KANAT ADAPTÖR

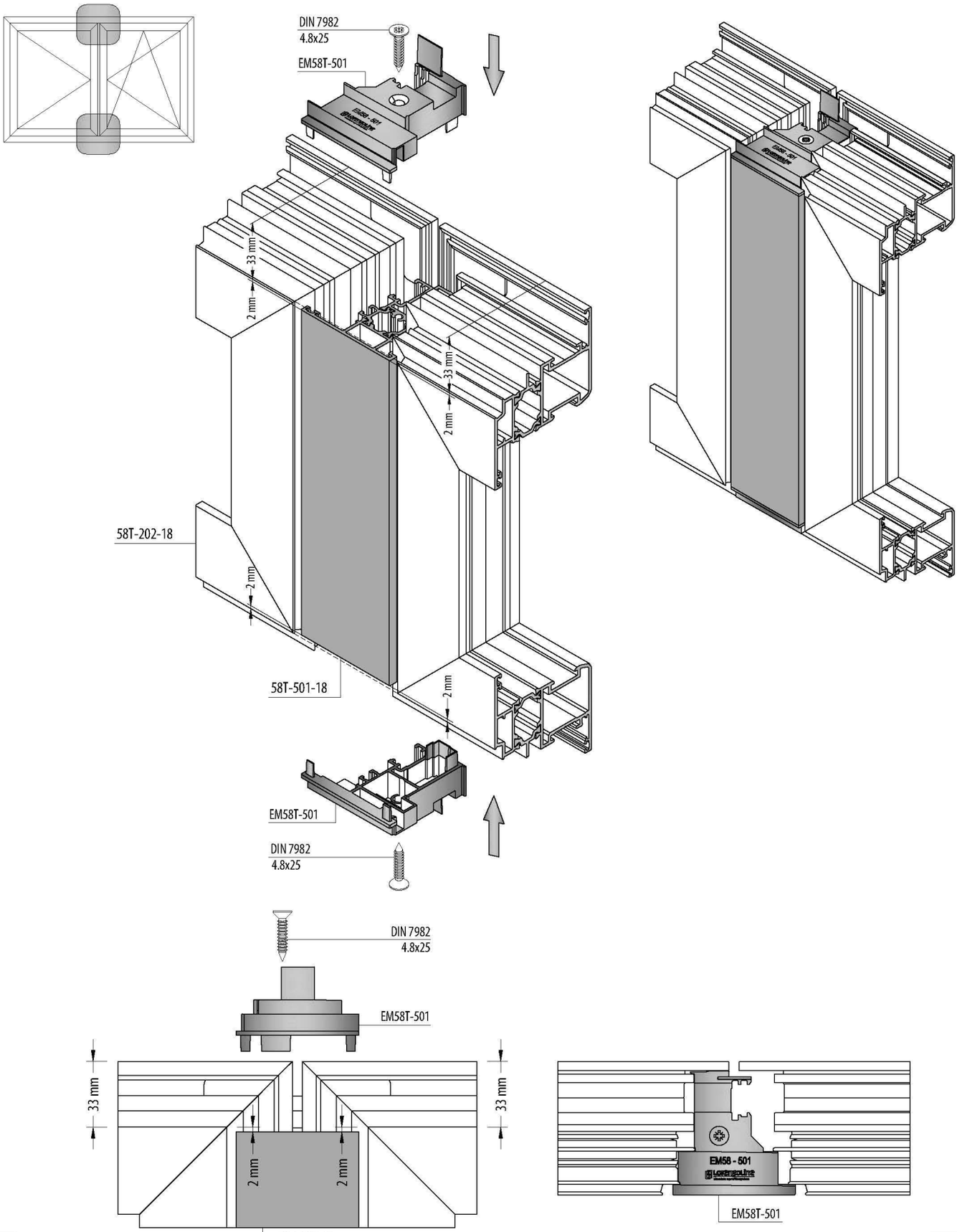

MULLION CUTTING KNIFE / ORTA KAYIT KESME BIÇAĞI

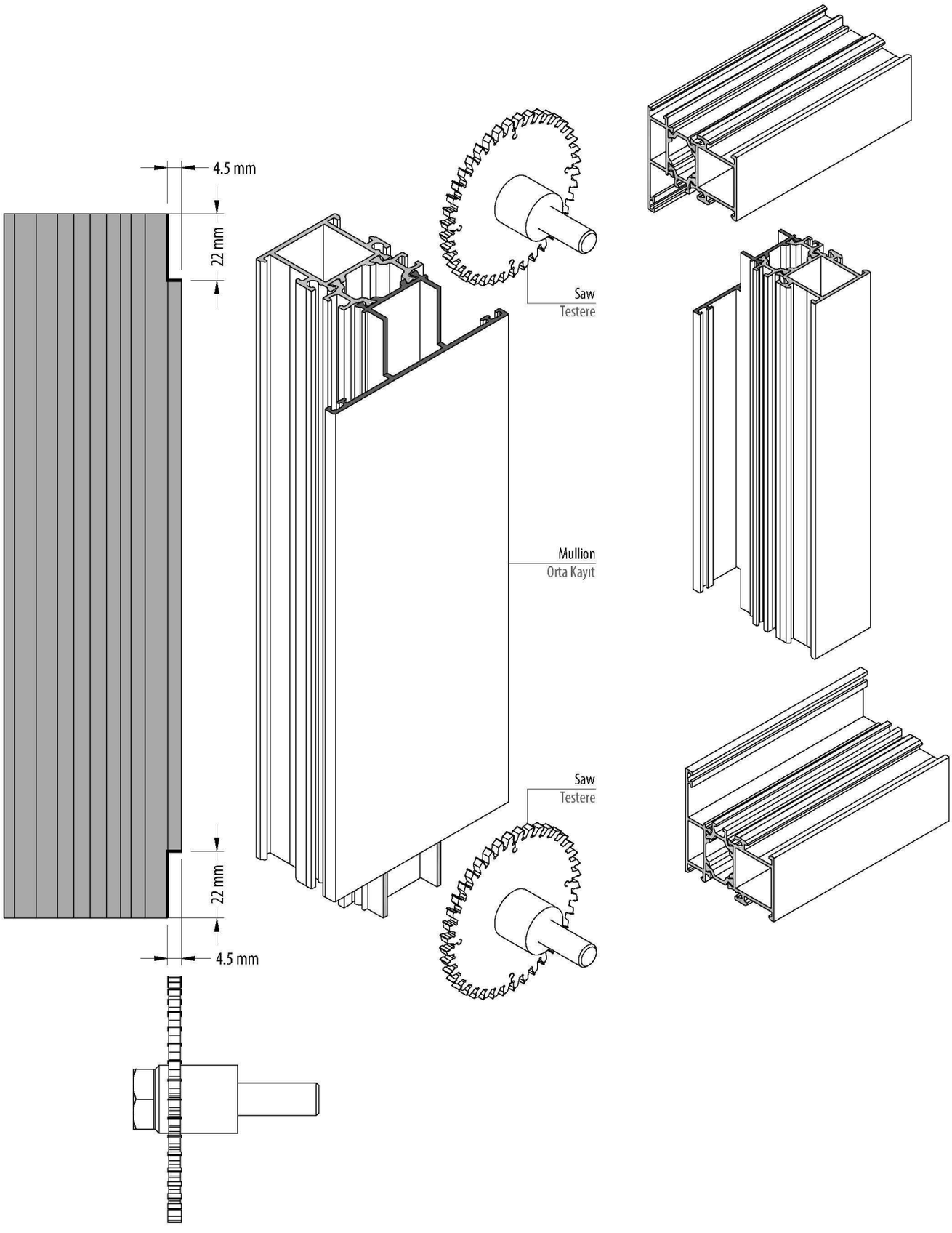

MULLION ISOLATION / ORTA KAYIT İZOLASYONU

Isolation Before Montage
Montaj Öncesi İzolasyon

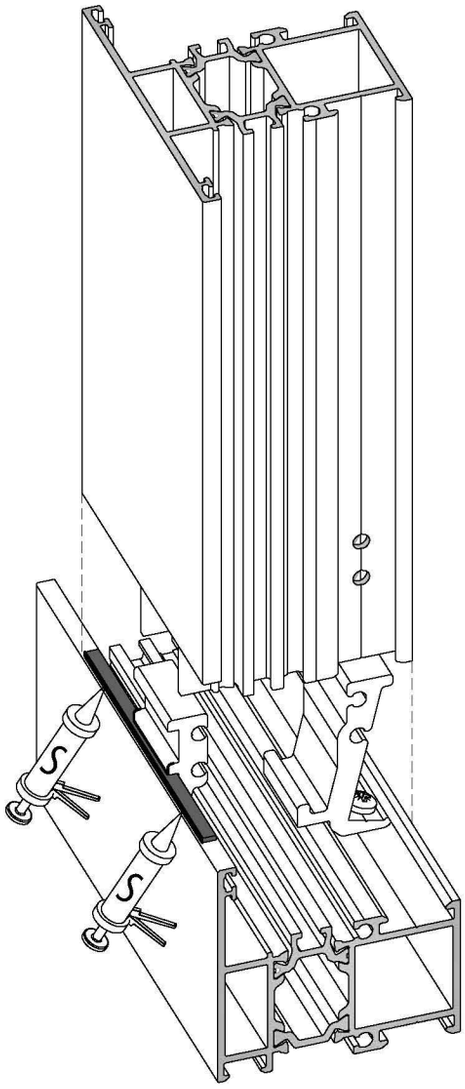

Isolation After Montage
Montaj Sonrası İzolasyon

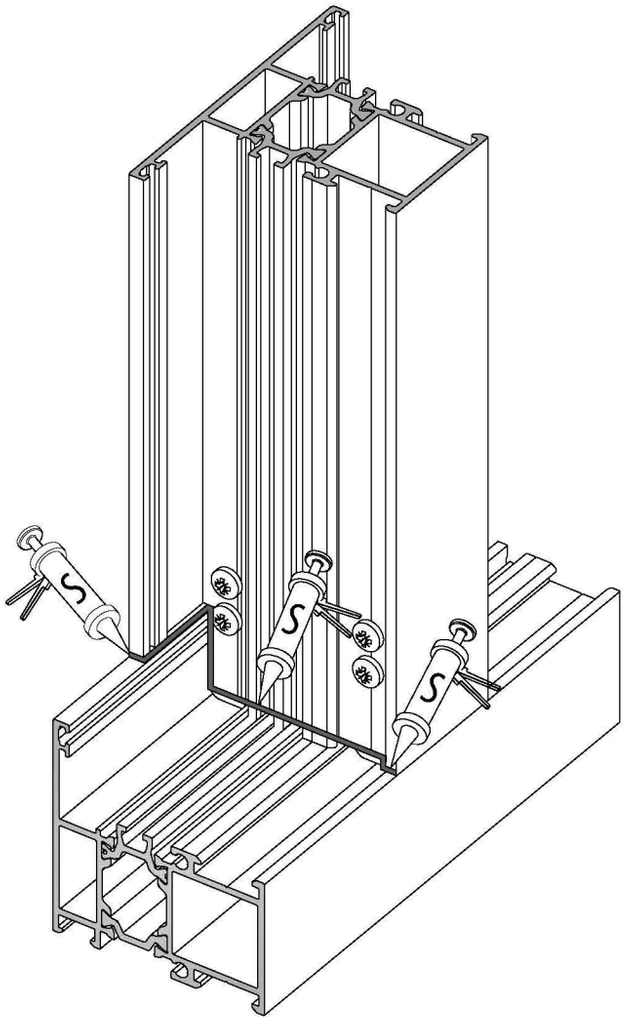

S = SILICONE / SİLİKON

MULLION MONTAGE WITH T JUNCTION / ÇEKTİRME BAĞLANTI İLE ORTA KAYIT MONTAJI

Montage to Frame / Kasaya Montaj

Holes Sızes
Delik Ölçüleri

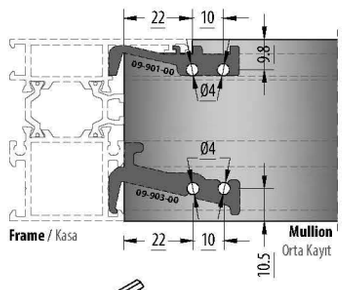

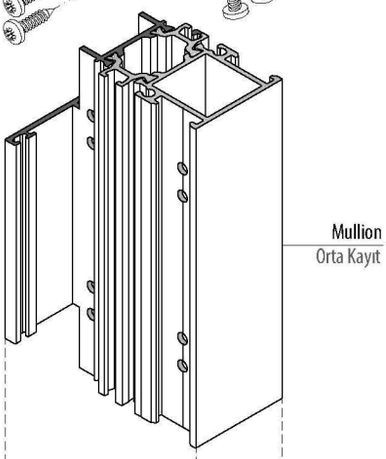

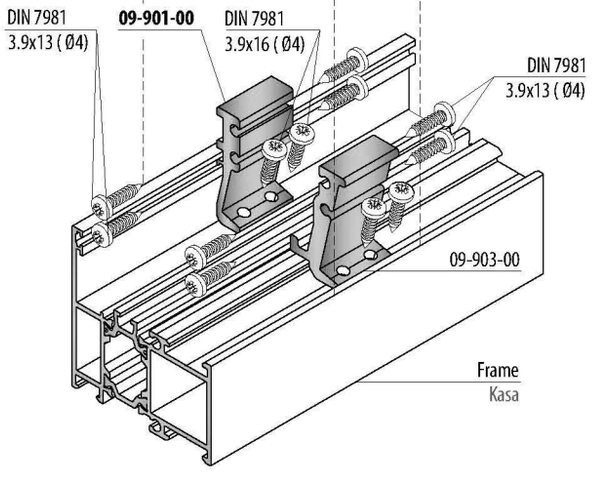

Montage to Sash / Kanat'a Montaj

Holes Sızes
Delik Ölçüleri

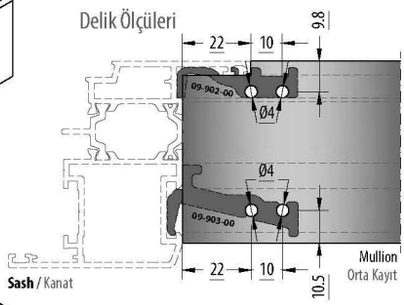

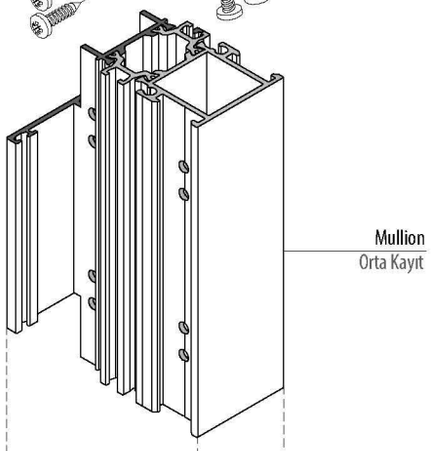

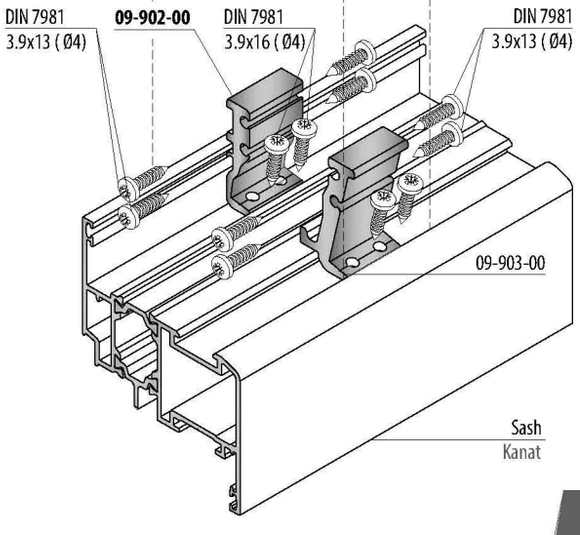

MULLION MONTAGE WITH SCREW / VİDA İLE ORTA KAYIT MONTAJI

Montage to Frame / Kasaya Montaj

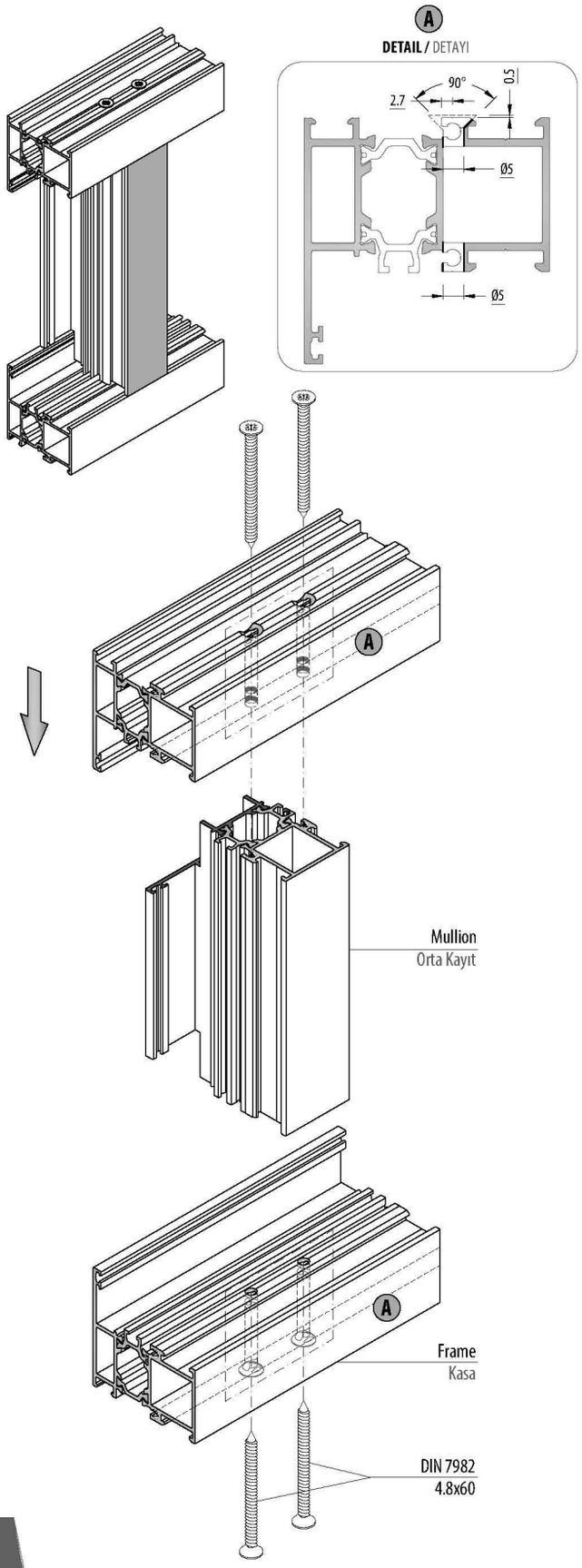

Montage to Sash / Kanat'a Montaj

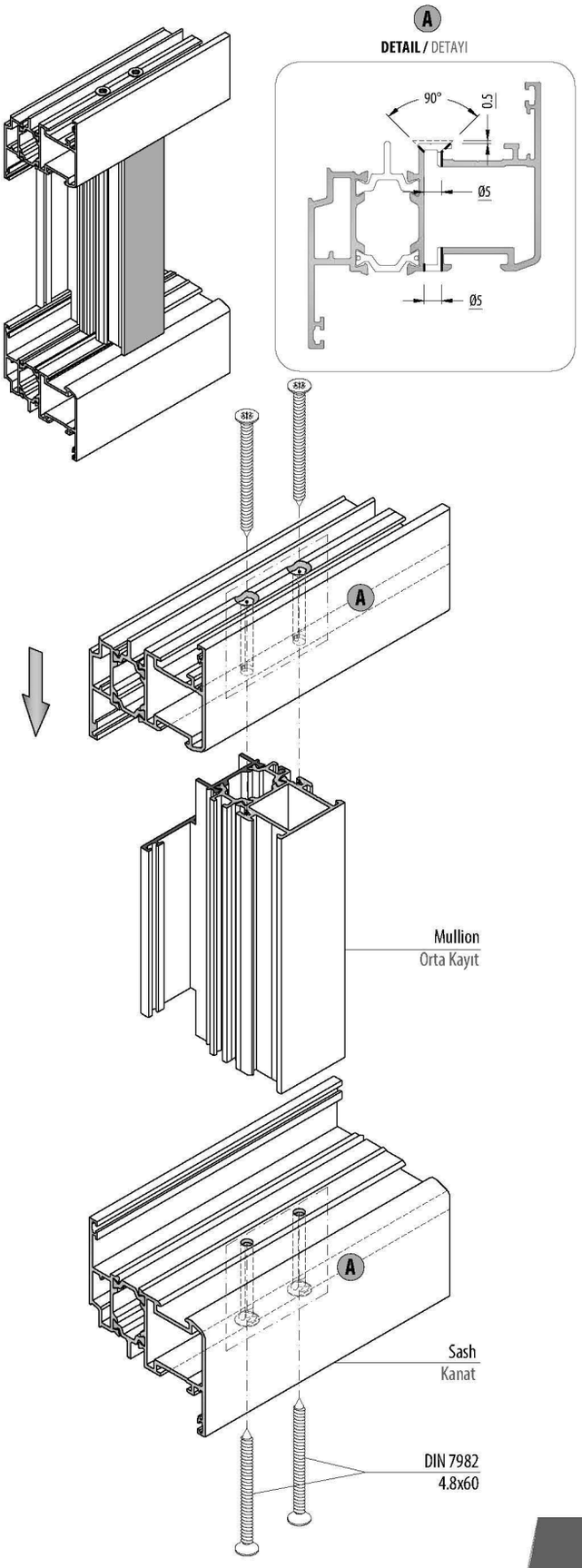

MULLION MONTAGE WITH SCREW / VİDA İLE ORTA KAYIT MONTAJI

SCREW SIZES / VİDA ÖLÇÜLERİ

MONTAGE TO FRAME
KASAYA MONTAJ

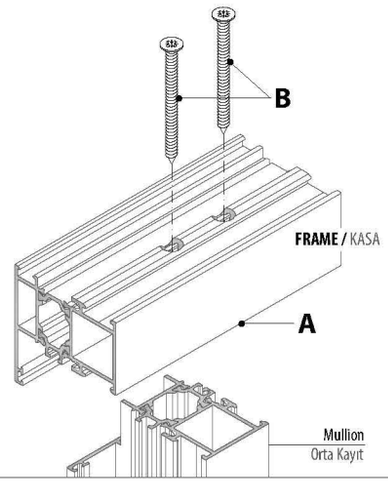

MONTAGE TO SASH
KANADA MONTAJ

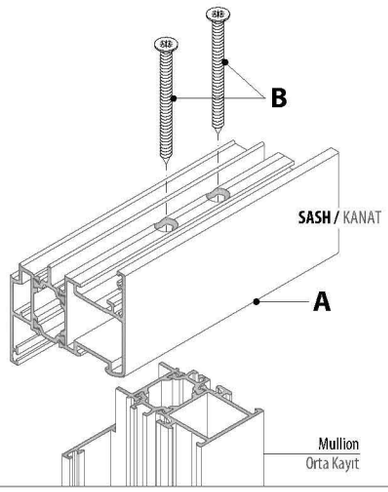

MONTAGE TO MULLION
ORTA KAYIT'A MONTAJ

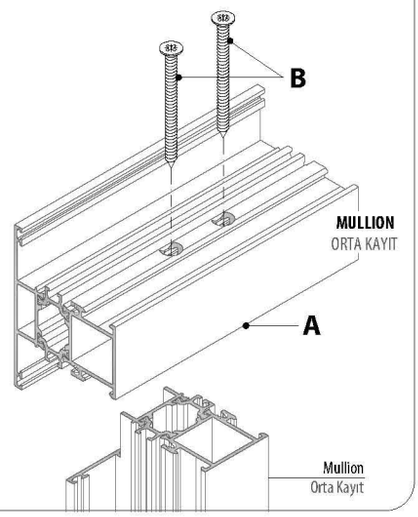

A	B
PROFILE CODE PROFİL KODU	SCREW VİDA
58T-102-18	YHB 4.8x60 DIN 7982
58T-102-15	
58T-112-15	
58T-122-18	
58T-132-18	
58T-103-18	
58T-113-18	
58T-133-18	
58T-104-18	YHB 4.8x70 DIN 7982
58T-105-18	YHB 4.8x100 DIN 7982

A	B
PROFILE CODE PROFİL KODU	SCREW VİDA
58T-201-18	YHB 4.8x38 DIN 7982
58T-201-15	
58T-201-20	
58T-202-18	YHB 4.8x50 DIN 7982
58T-202-15	
58T-202-20	
58T-203-18	YHB 4.8x60 DIN 7982
58T-204-18	YHB 4.8x70 DIN 7982
58T-204-15	
58T-204-20	
58T-205-18	YHB 4.8x80 DIN 7982
58T-205-15	
58T-205-20	
58T-206-18	YHB 4.8x90 DIN 7982
58T-207-18	
58T-252-18	YHB 4.8x50 DIN 7982
58T-252-15	
58T-256-18	YHB 4.8x90 DIN 7982

A	B
PROFILE CODE PROFİL KODU	SCREW VİDA
58T-301-18	YHB 4.8x38 DIN 7982
58T-301-15	
58T-301-20	
58T-306-18	YHB 4.8x50 DIN 7982
58T-302-18	YHB 4.8x60 DIN 7982
58T-302-15	
58T-302-20	
58T-303-18	YHB 4.8x70 DIN 7982
58T-304-18	YHB 4.8x80 DIN 7982
58T-304-15	
58T-305-18	YHB 4.8x100 DIN 7982
58T-312-18	YHB 4.8x60 DIN 7982
58T-312-15	
58T-322-18	

MULLION MONTAGE WITH SCREW / VİDA İLE ORTA KAYIT MONTAJI

MULLION AKS DIMENSION / ORTA KAYIT AKS ÖLÇÜLERİ

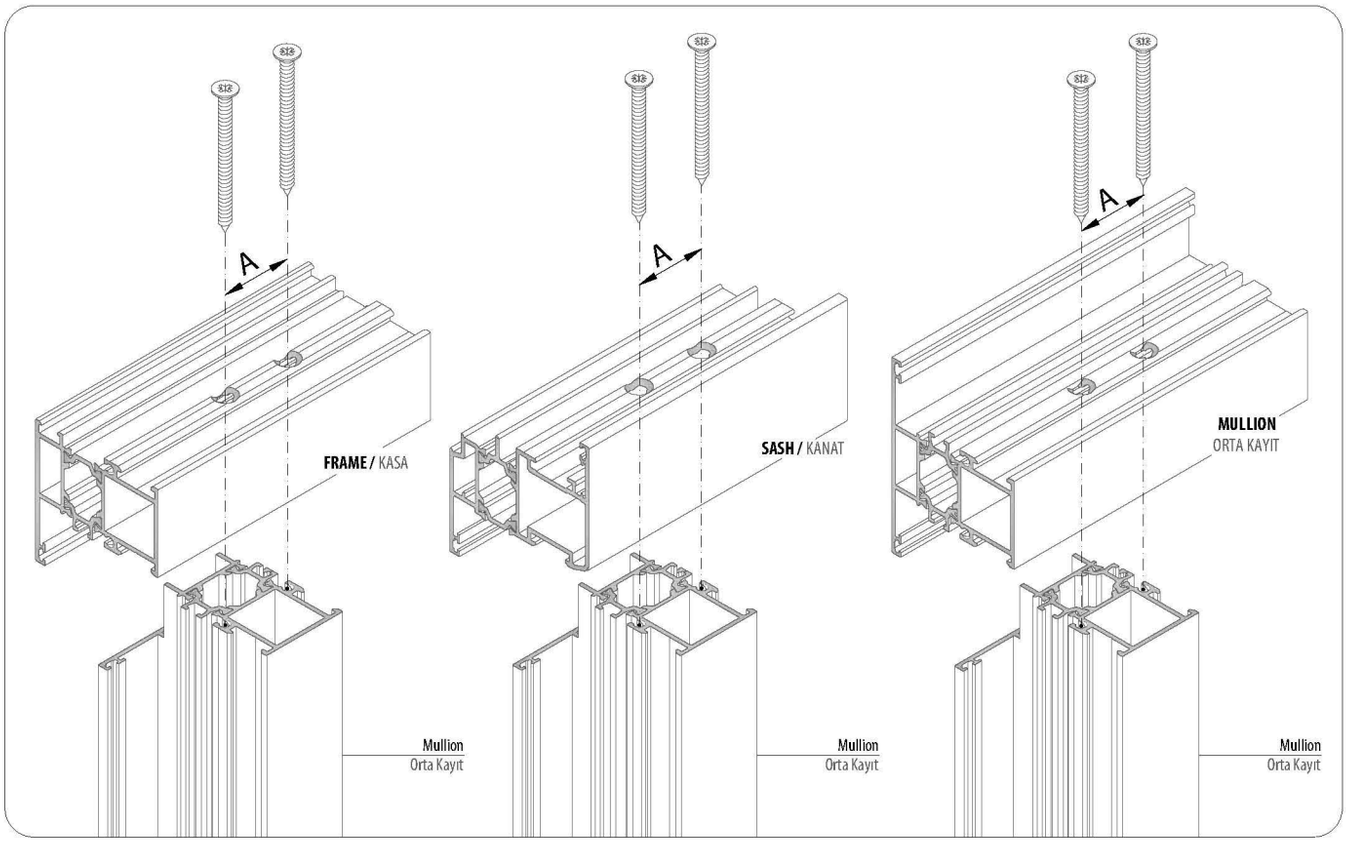

PROFILE CODE PROFİL KODU	A CENTER DIMENSION VİDA AKS ÖLÇÜLERİ
58T-301-18	18 mm
58T-301-15	
58T-301-20	
58T-306-18	24.9 mm
58T-302-18	30 mm
58T-302-15	
58T-302-20	
58T-312-18	
58T-312-15	
58T-322-18	

PROFILE CODE PROFİL KODU	A CENTER DIMENSION VİDA AKS ÖLÇÜLERİ
58T-303-18	39.9 mm
58T-304-18	50.3 mm
58T-304-15	
58T-305-18	79.4 mm

KICK PLATE CAP MONTAGE / ETEK KAPAK MONTAJI

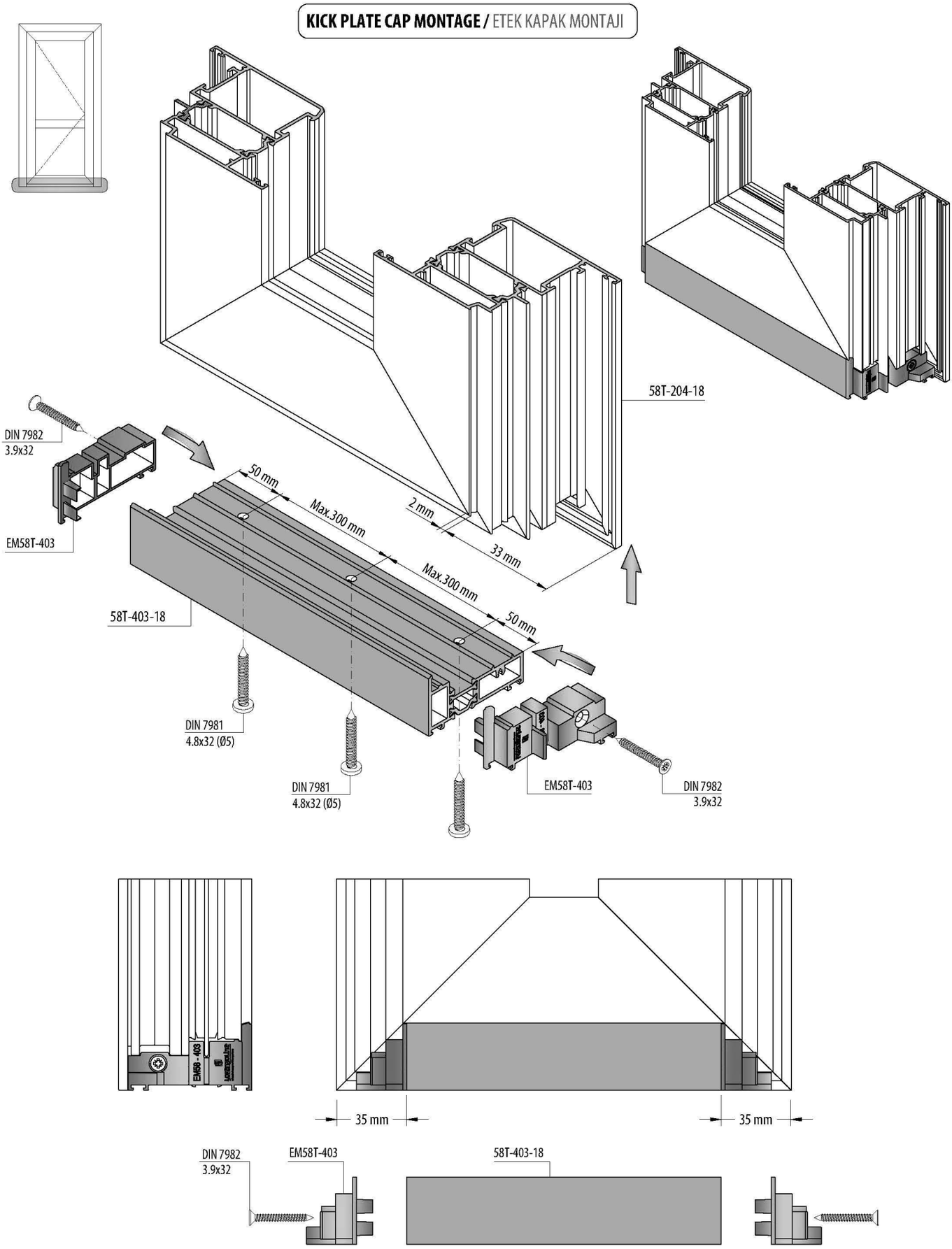

KICK PLATE MONTAGE WITH T JUNCTION / ÇEKTİRME BAĞLANTI İLE ETEK MONTAJI

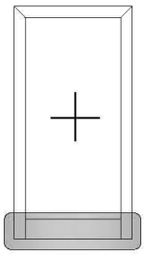

Montage to Frame / Kasaya Montaj

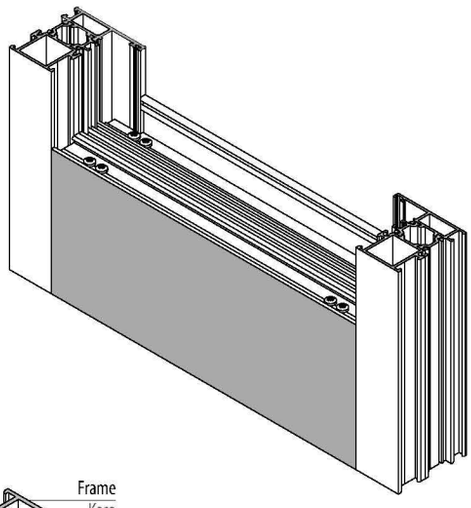

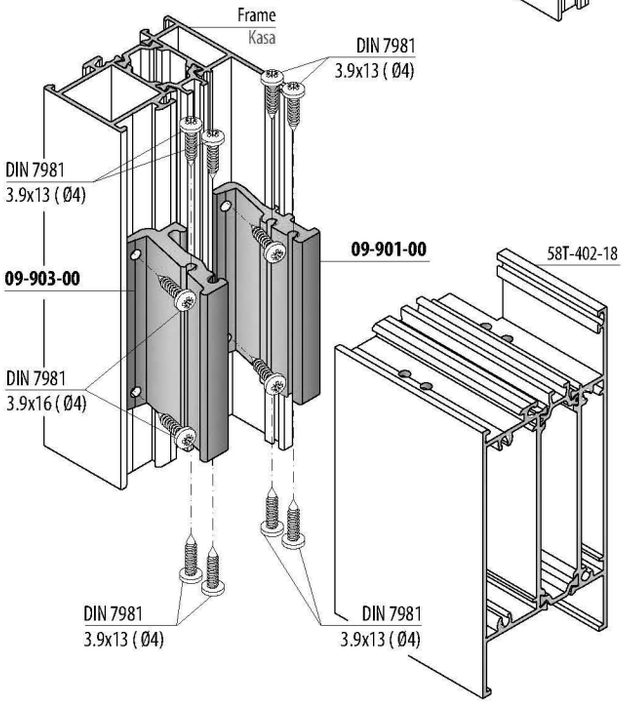

Montage to Sash / Kanat'a Montaj

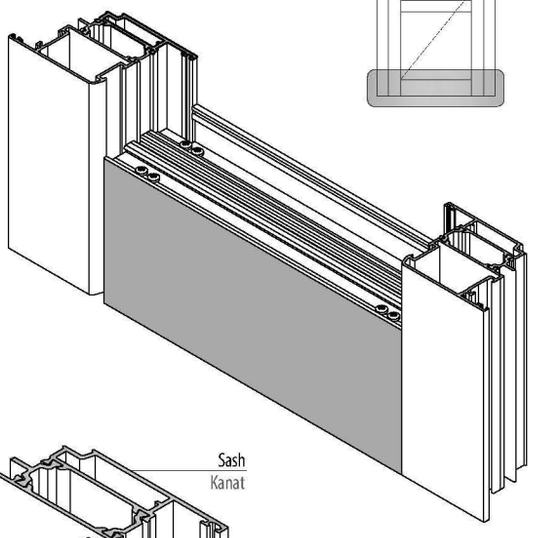

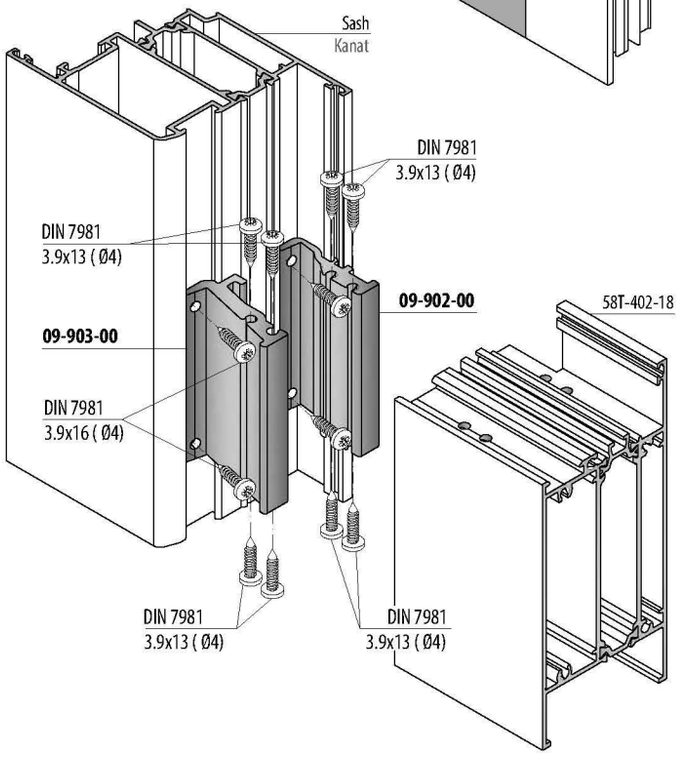

Holes Sizes
Delik Ölçüleri

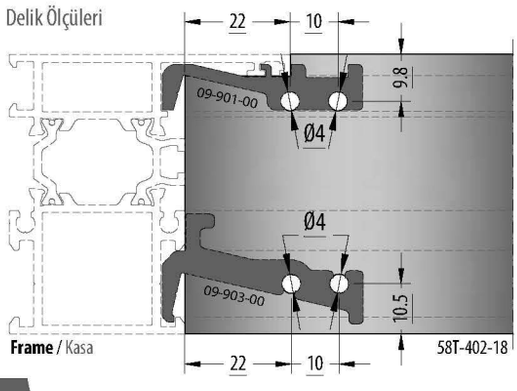

Holes Sizes
Delik Ölçüleri

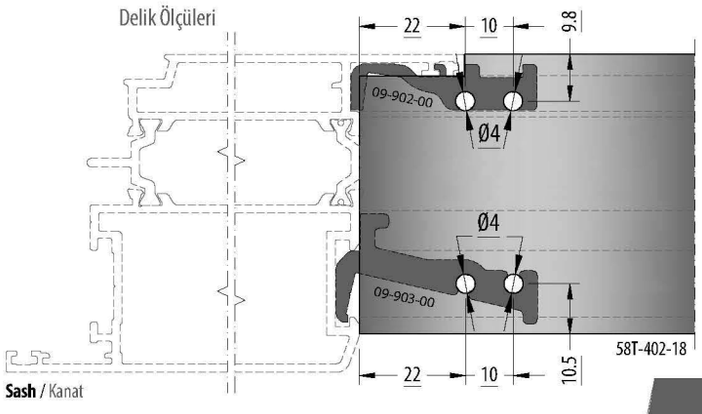

KICK PLATE CAP MONTAGE WITH SCREW / ETEK KAPAĞI İLE VİDA MONTAJI

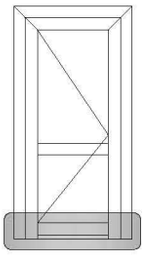

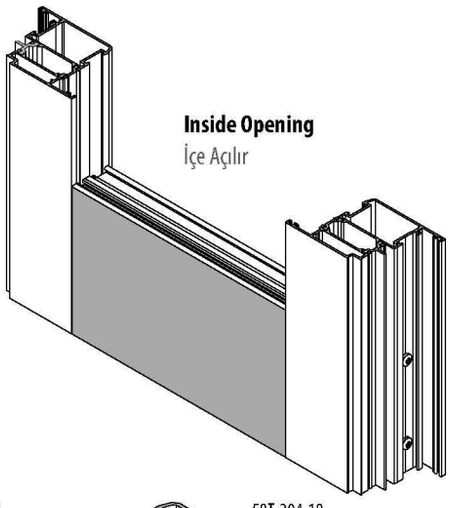

Inside Opening
İçe Açılır

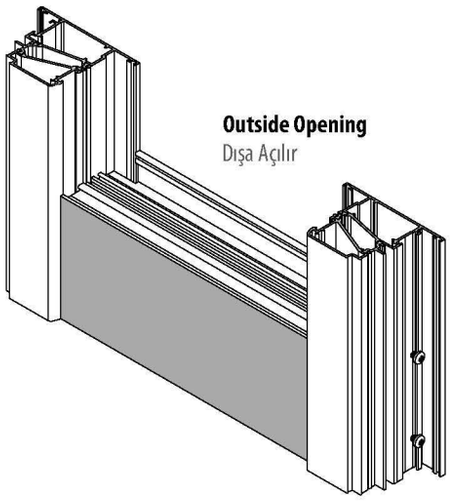

Outside Opening
Dışa Açılır

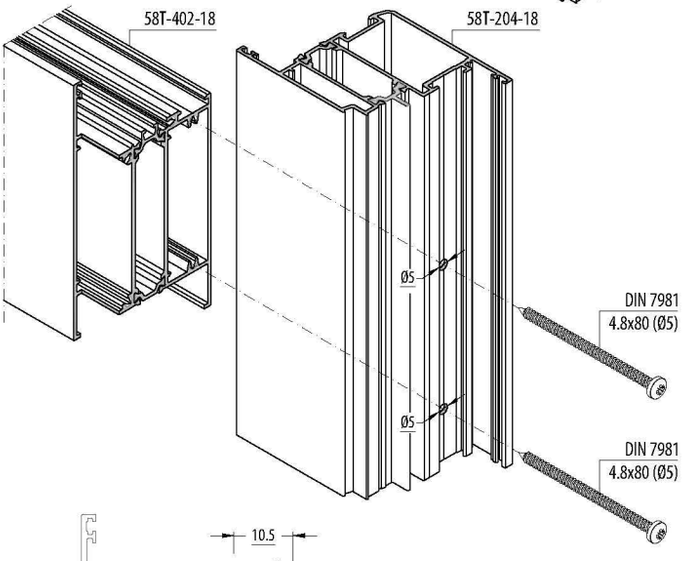

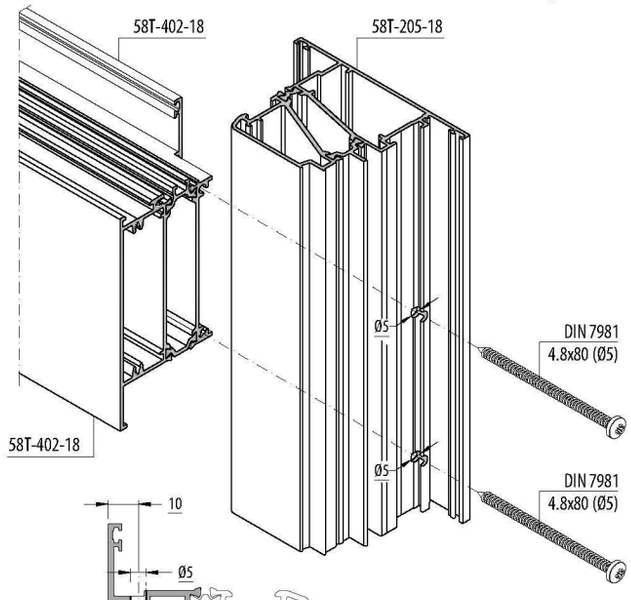

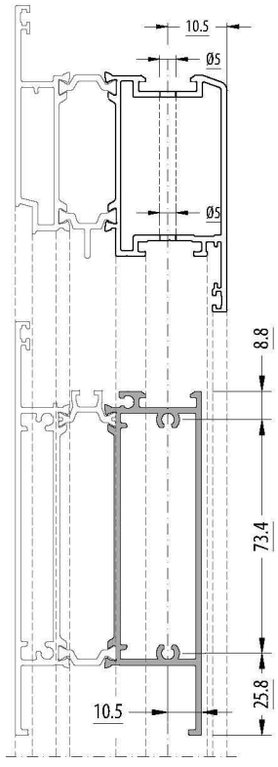

Screw Sizes / Vida Ölçüleri

PROFILE CODE PROFİL KODU	SCREW VİDA
58T-204-18	DIN 7981 4.8x80
58T-204-15	
58T-204-20	
58T-206-18	DIN 7981 4.8x90
58T-256-18	

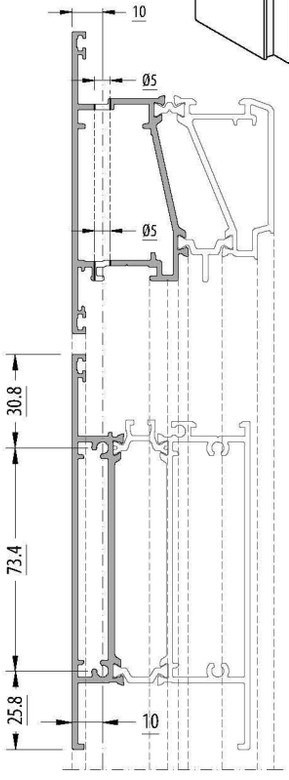

Screw Sizes / Vida Ölçüleri

PROFILE CODE PROFİL KODU	SCREW VİDA
58T-205-18	DIN 7981 4.8x80
58T-205-15	
58T-205-20	
58T-207-18	DIN 7981 4.8x90

DOOR SASH DROPPER MONTAGE / KAPI KANADI DAMLALIK MONTAJI

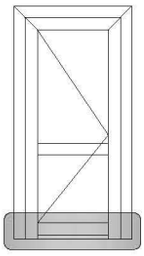

Inside Opening / İçe açılır

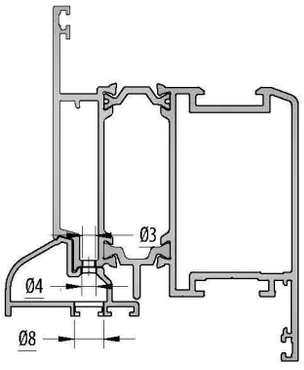

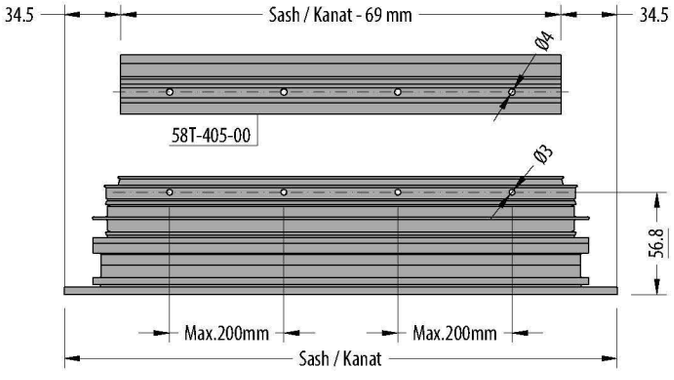

Outside Opening / Dışa Açılır

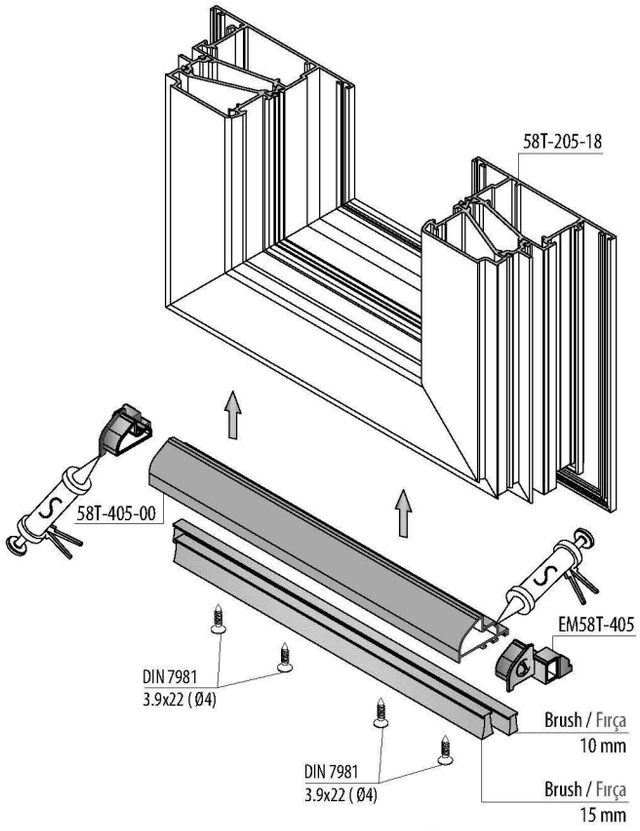

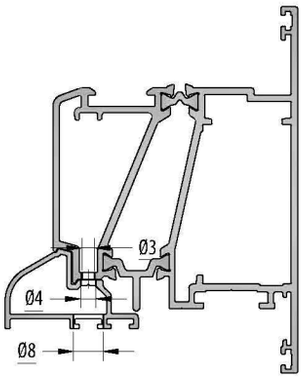

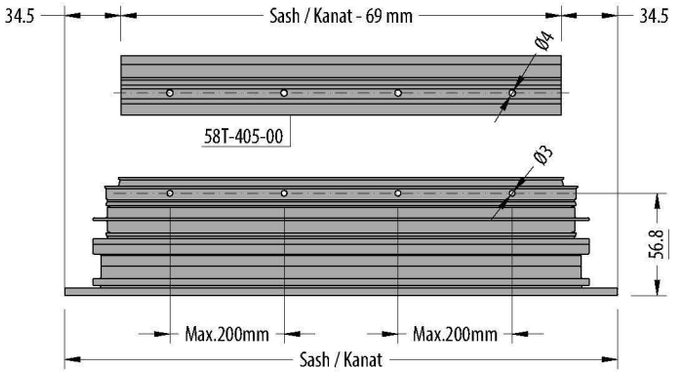

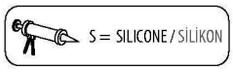

FRAME KICK PLATE MONTAGE / KASA İLE ETEK MONTAJI

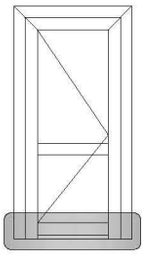

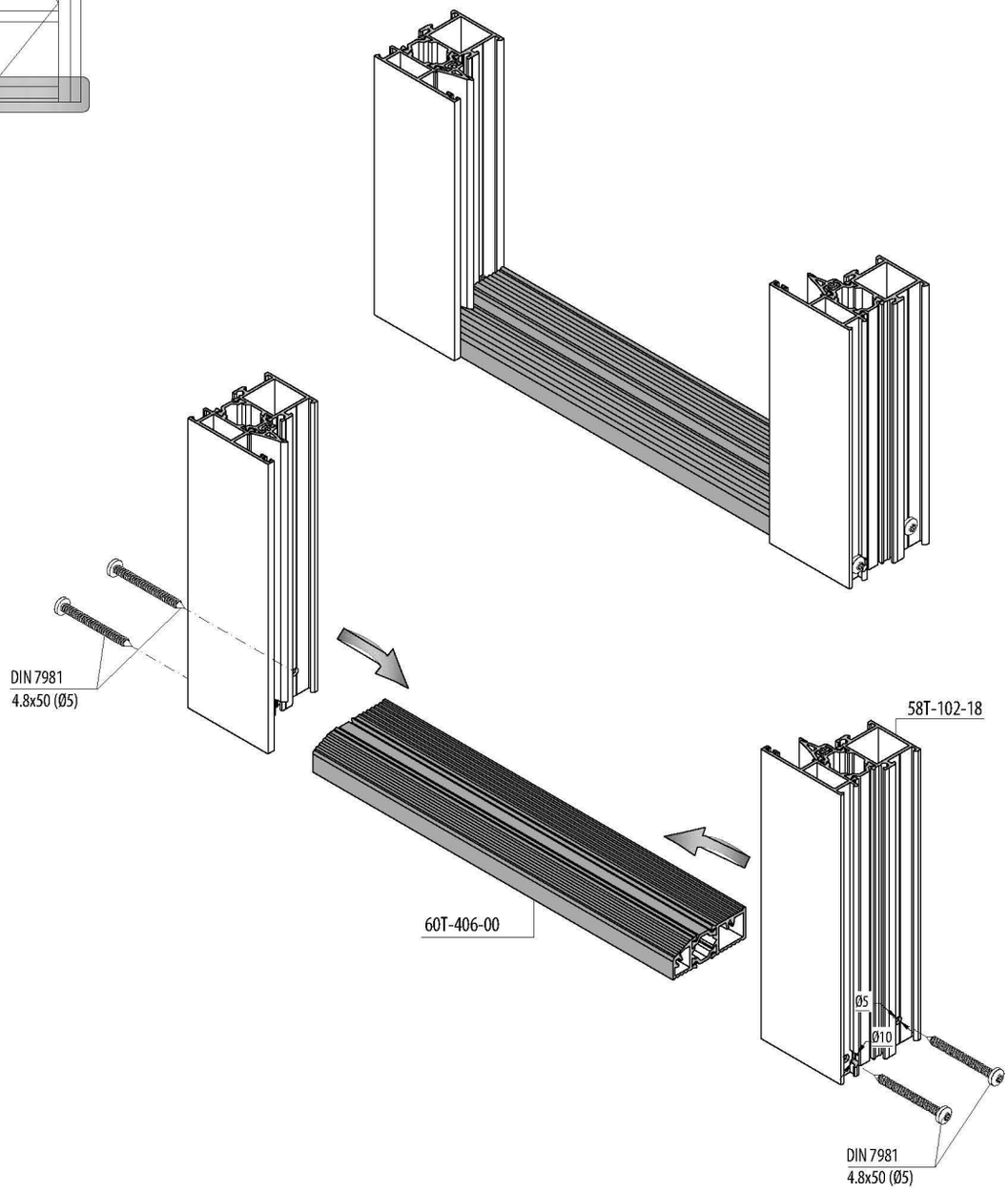

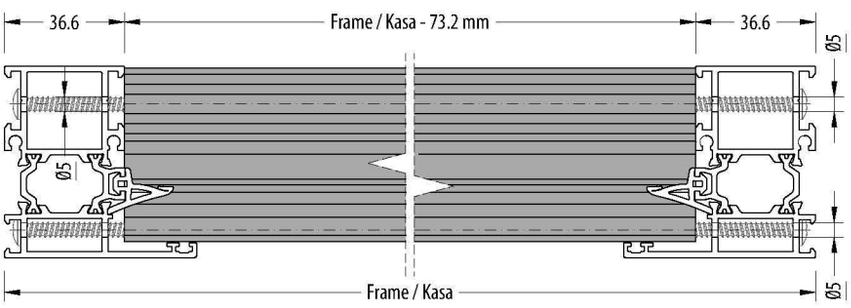

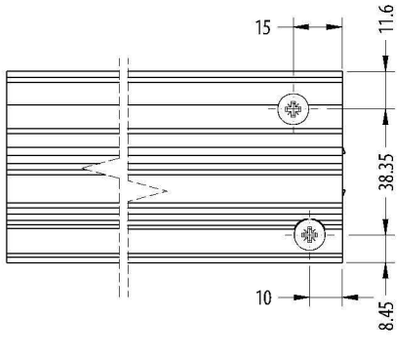

PIVOT OPENING ASSEMBLY / PİVOT AÇILIM UYGULAMASI

Frame Assembly / Kasa Uygulaması

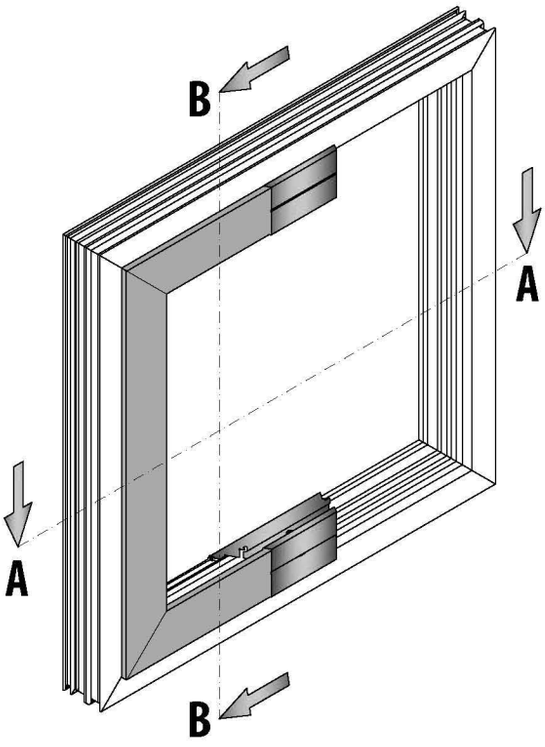

EM58-520
PIVOT HINGE
PİVOT MENTEŞE



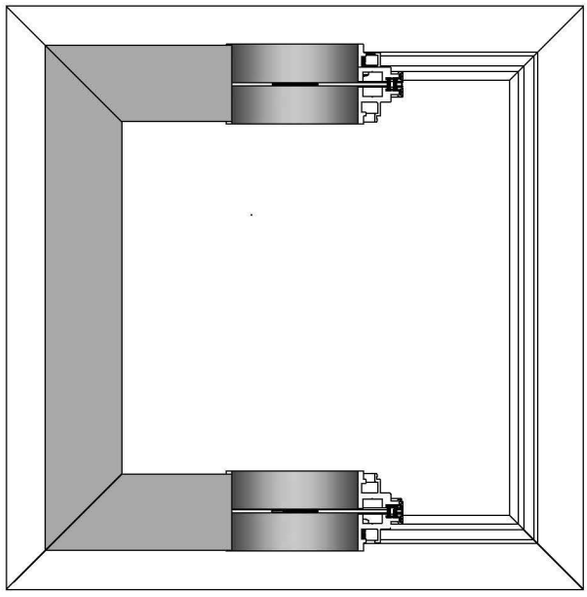

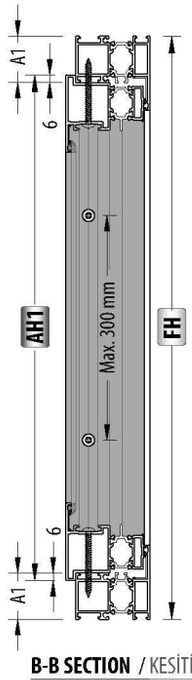

B-B SECTION / KESİTİ

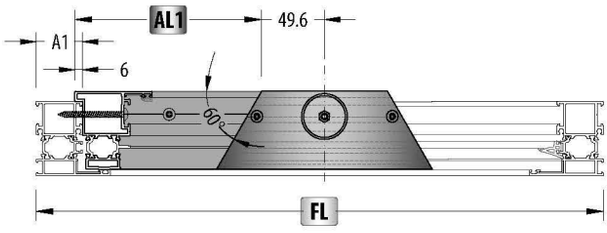

A-A SECTION / KESİTİ

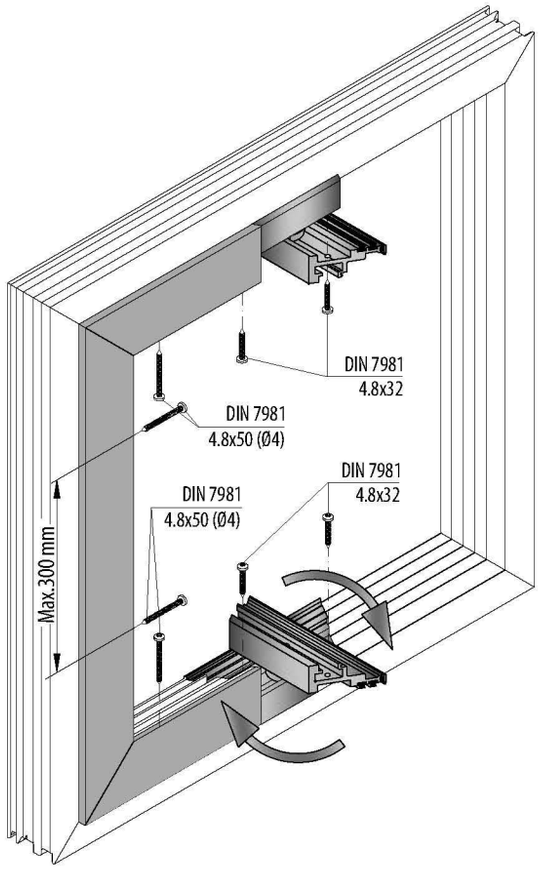

PROFILES / PROFİLLER

Code Kod	Drawing Çizim	Cut Kesim	Quantity Miktar	Dimensions (mm) Boyutlar
58T-102-18			2 Pcs / Adet	FL
			2 Pcs / Adet	FH
AL1 **58T-503-18**	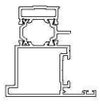	Front View / Ön Görünüş 45° Plan View / Plan Görünüş 60°	2 Pcs / Adet	$AL1 = \frac{FL}{2} - 43.6 - A1$
			1 Pcs / Adet	AH1 = FH - (A1+A1) + 12

PIVOT OPENING ASSEMBLY / PİVOT AÇILIM UYGULAMASI

Sash Assembly / Kanat Uygulaması

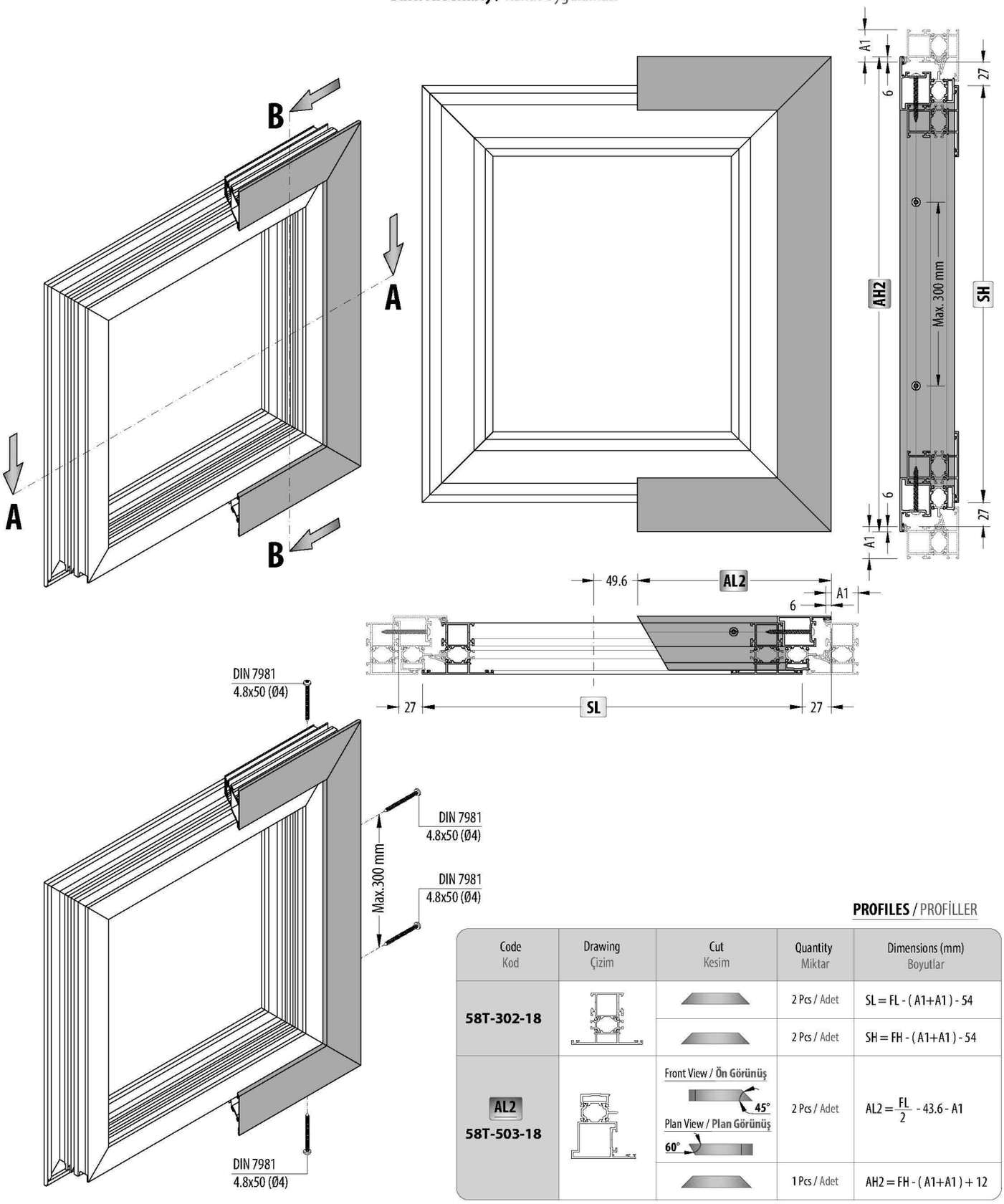

PROFILES / PROFİLLER

Code Kod	Drawing Çizim	Cut Kesim	Quantity Miktar	Dimensions (mm) Boyutlar
58T-302-18			2 Pcs / Adet	SL = FL - (A1+A1) - 54
			2 Pcs / Adet	SH = FH - (A1+A1) - 54
AL2 **58T-503-18**		Front View / Ön Görünüş Plan View / Plan Görünüş 	2 Pcs / Adet	$AL2 = \frac{FL}{2} - 43.6 - A1$
			1 Pcs / Adet	AH2 = FH - (A1+A1) + 12

PIVOT OPENING ASSEMBLY / PİVOT AÇILIM UYGULAMASI

Frame - Sash Assembly / Kasa - Kanat Uygulaması

* Pivot hinge sash side should be open position.
* Sash module should slide to frame module and hinge should screw to sash module.
* Pivot menteşe kanat kısmı açık hale getirilir.
* Kanat modülü, kasa modülünün içerisine sürülür ve menteşe kanat modülüne vidalanır.

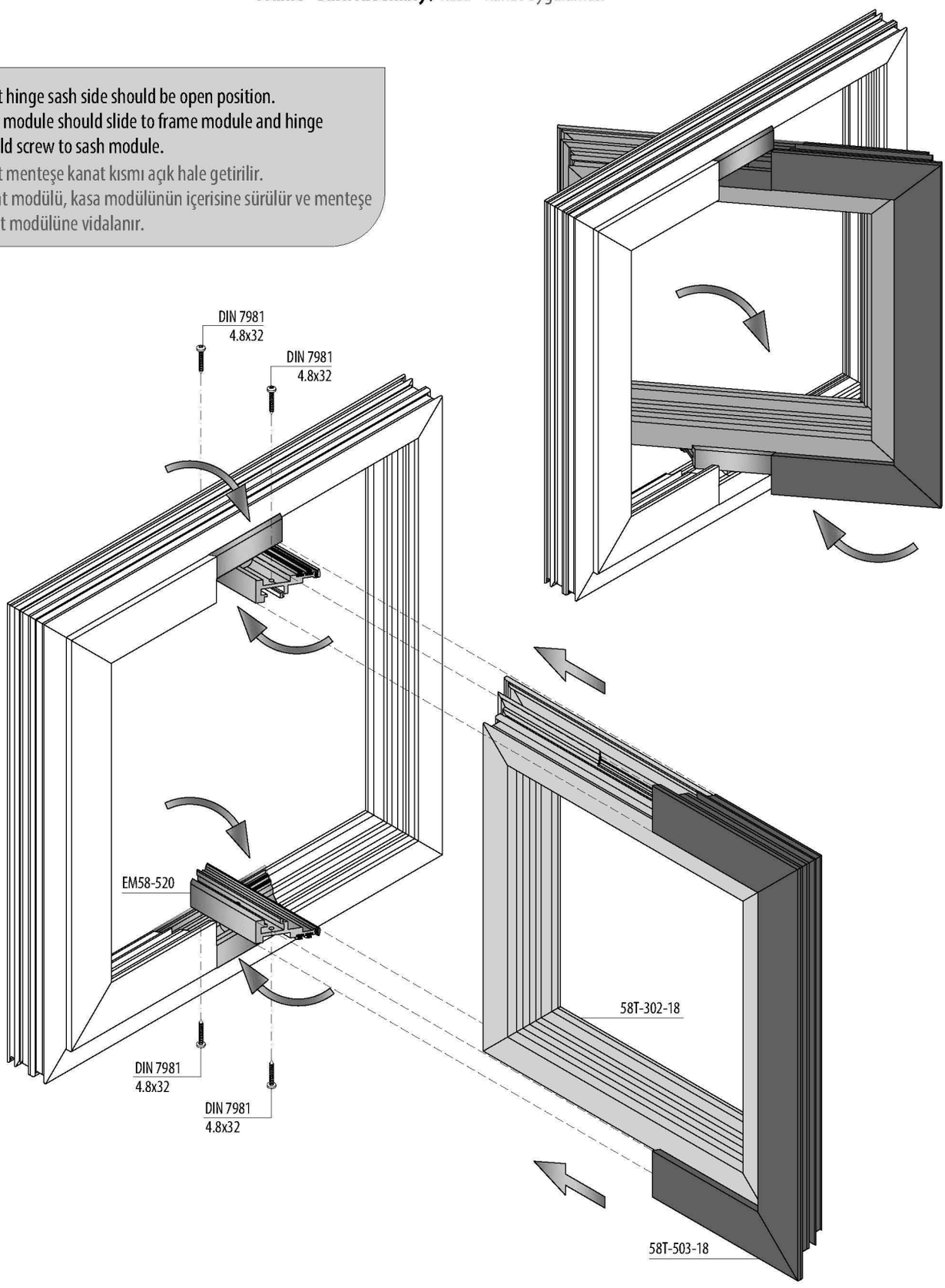

KURTOĞLU®
ALUMINIUM

KURTOĞLU BAKIR KURŞUN SANAYİ A.Ş.
Velimeşe Organize Sanayi Bölgesi Akbayır Yolu
Küme Evler No: 81 Ergene 59851 Tekirdağ / Türkiye
T: 0 282 684 70 00 F: 0 282 684 70 01
www.kurtogluas.com