

05/2024

Update
06/2025

LORENZOLINE

77BF

Bi-Fold Door System | Katlanır Kapı Sistemi

INDEX
İndeks

Technical Information | Teknik Bilgiler	1 - 3
Profile Index | Profil İndeks	4 - 5
Profiles | Profiller	6 - 15
Details | Detaylar	16 - 69
Glazing Tables | Cam Tabloları	70 - 72
Accessories | Aksesuarlar	73 - 81
Cutting Size | Kesim Ölçüleri	82 - 123
Assembly Details | Montaj Detayları	124 - 168
Accessories Assembly | Aksesuar Uygulaması	169 - 177

PROFILE INDEX
PROFİL İNDEKS

System **properties** / Sistem **bilgisi**



77BF BI-FOLD DOOR SYSTEM / KATLANIR KAPI SİSTEMİ

- Sash capacity is up to 120 kg per sash.
- Sash height can rich to 3.5 meters.
- 2 different visual variation for sashes.
- Sashes are carring by lower pulleys.
- Basic and master locks are avaible.
- It can be applied in various variations up to 7 sashes.
- 45 and 90 degree frame montage alternative.
- Press and mechanical corner joint options for frame and sash.
- Sash width can rich to 1.2 meters.

- Kanat taşıma kapasitesi kanat başı 120 kg dır.
- 3.5 metreye kadar kanat yüksekliği
- Kanatlar için 2 farklı görsel varyasyon.
- Kanatlar alt rulmanlar tarafından taşınmaktadır.
- Basit ve kilitli kol seçenekleri mevcuttur.
- 7 kanada kadar çeşitli varyasyonlarda uygulanabilmektedir.
- 45 ve 90 derece kasa montaj alternatifi.
- Kasa ve kanat için pres ve mekanik köşe bağlantı opsiyonu.
- 1.2 metreye kadar kanat genişliği.

Technical **Properties** / Teknik **Özellikler**

FRAME DEPTH | KASA DERINLIĞI	77 mm
SASH DEPTH | KANAT DERİNLİĞİ	77 mm
WALL THICKNESS | ET KALINLIĞI	1.8 mm
GLASS THICKNESS | CAM KALINLIĞI	14 - 50 mm
THERMAL INSULATION | ISI BARİYERİ	24 - 32 mm

Opportunities / Seçenekler

		77BF-101-18	**77BF-102-18**	**77BF-103-18**	**77BF-102-18 Groove** / Oluk	**Corner** / Köşe
FRAME JOIN KASA BİRLEŞİM **90°**	**Inside Opening** | İçe Açılır	✓	✓	✓	✓	✓
	Outside Opening | Dışa Açılır					
FRAME JOIN KASA BİRLEŞİM **45°**	**Inside Opening** | İçe Açılır	✓	–	–	–	–
	Outside Opening | Dışa Açılır					

Performance **Values** / Performans **Değerleri**

THERMAL INSULATION VALUE
SİSTEM UF DEĞERİ - EN ISO 10077-2

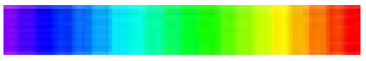

2,947 W/m2K

system**properties** / sistem**bilgisi**

Construction Depth	Frame : 77 mm - Vent : 77 mm	**Derinlik**	Kasa : 77 mm - Kanat : 77 mm
Glazing	Glazing from 14 mm up to 50 mm with dry EPDM gaskets. The choice of joits and glazing beads depend on the thickness of the glass.According to the tolerances of the glazing either a smaller or bigger joint and or glazing bead is used.	**Cam Kalınlığı**	Cam kalınlığı EPDM fitil ile birlikte 14 mm - 50 mm aralığındadır.Bağlantı ve çıta cam kalınlığına göre seçilmelidir. Cam toleransına göre küçük yada büyük bağlantı veya cam çıtası kullanılır.
Insulation Bar Thermal Permability	24 - 32 mm (Uf) **2,947** W / m2K	**Isı Bariyeri Isı Geçirgenliği**	24 - 32 mm (Uf) **2,947** W / m2K
Gaskets	The opening windows have a central gasket, an acoustical gasket and glazing gaskets in EPDM	**Fitil**	Açılır pencerelerde tozluk fitili, akustik fitil ve cam fitilleri EPDM'dir.
Drainage	For maximum performance, you should follow the instructions in the catalogue.	**Su Tahliye**	Maksimum performans için katalogdaki talimatları takip etmelisiniz.

production**properties** / üretim**bilgisi**

Alloy	The aluminium profiles have been extruded from the alloy AlMgSi 0.5 as F22 according to the EN 12020.		**Alaşım**	Alüminyum profiller AlMgSi 0.5 - F22 alaşımından ve EN 12020 standardına göre üretilir.	
	Physical Properties			**Fiziksel Özellikler**	
	1. Density	: 2.70 Kg / dm3		1. Yoğunluk	: 2.70 Kg / dm3
	2. Modules of Elasticity	: 69 kN / mm2		2. Elastisite Modülü	: 69 kN / mm2
	3. Resistivity	: 20° 33 n Ω .m		3. Direnç	: 20° 33 n Ω .m
	4. Melting point	: 600 - 655 °C		4. Erime Noktası	: 600 - 655 °C
	5. Linear expeansion coefficient	: 20 - 100°C µ °C^{-1}		5. Genişleme Katsayısı	: 20 - 100°C µ °C^{-1}
	Mechanical Properties			**Mekanik Özellikler**	
	1. Tensile strength	: Min 215 MPa		1. Kopma Dayanıklılığı	: Min 215 MPa
	2. Yield strength	: 190 MPa		2. Elastisite Limiti	: 190 MPa
	3. Elongation	: % 10		3. Uzama	: % 10
	4. Hardness	: 67 Brinell		4. Sertlik	: 67 Brinell
Surface Treatment	**Anodising**		**Yüzey İşlem**	**Eloksal**	
	In anodising process , microns of the profiles for the inside and outside use are different. The complete anodisation process takes place in accordance with the specifications of **QUALANOD.**			Eloksal projesinde profil mikronları iç ve dış kullanım için farklıdır.Bütün eloksal projesi **QUALANOD** spesifikasyonlarına göre uygulanır.	
	Electrostatic Powder Coating			**Eloktrostatik Toz Boya**	
	The thermal break allows the profile to be painted when compounded. On average, the coating thickness is minimally 60 micron. The complete powder coating process takes place in accordance with the specifications of **QUALICOAT SEASIDE.**			Isı bariyeri çakıldığında profil boyanabilir. Genel olarak kaplama kalınlığı minimum 60 mikrondur. Bütün toz boya projesi **QUALICOAT SEASIDE** spesifikasyonlarına göre uygulanır.	

profiles / profiller

CODE KOD	DRAWING ÇİZİM	WEIGHT AĞIRLIK Kg/m
77BF-111-18		1.474
77BF-101-18	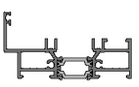	1.613
77BF-102-18	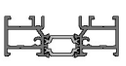	1.474
77BF-103-18		0.861
77BF-151-00	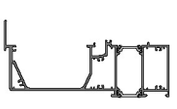	3.330
77BF-401-18		1.510
77BF-201-18	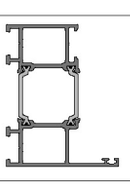	1.688
77BF-202-18	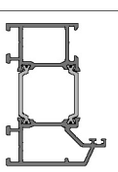	1.692
77BF-301-18	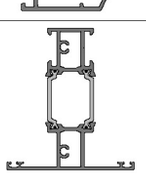	1.561

CODE KOD	DRAWING ÇİZİM	WEIGHT AĞIRLIK Kg/m
77BF-402-00		0.110
77BF-501-00		0.250
77BF-502-00		0.274
77BF-503-00		0.674
77BF-511-00		0.158
77BF-512-00		0.092
77BF-515-00	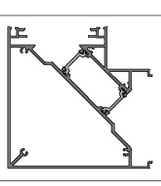	3.541
07-102-00		0.324
07-103-00		0.488

CODE KOD	DRAWING ÇİZİM	WEIGHT AĞIRLIK Kg/m
07-105-00	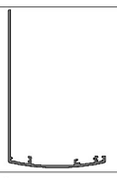	0.875
07-107-015		0.900
07-108-015		0.462
08-205-00		0.279
08-207-00		0.290
08-208-00		0.298
08-209-00		0.308
08-212-00		0.323
08-213-00		0.339

profiles / profiller

CODE KOD	DRAWING ÇİZİM	WEIGHT AĞIRLIK Kg/m
08-217-00		0.351
08-215-00		0.369
08-216-00		0.393
08-222-00		0.417
08-221-00		0.426
08-223-00		0.454
08-224-00		0.465
08-105-00		0.259
08-107-00		0.262

CODE KOD	DRAWING ÇİZİM	WEIGHT AĞIRLIK Kg/m
08-108-00		0.269
08-109-00		0.280
08-112-00		0.291
08-113-00		0.300
08-117-00		0.309
08-115-00		0.317
08-116-00		0.330
08-122-00		0.342
08-121-00		0.349

CODE KOD	DRAWING ÇİZİM	WEIGHT AĞIRLIK Kg/m
08-308-00		0.244
08-309-00		0.258
08-312-00		0.276
08-314-00		0.302
09-101-00		2.561
09-103-00		3.689

PROFILES
PROFİLLER

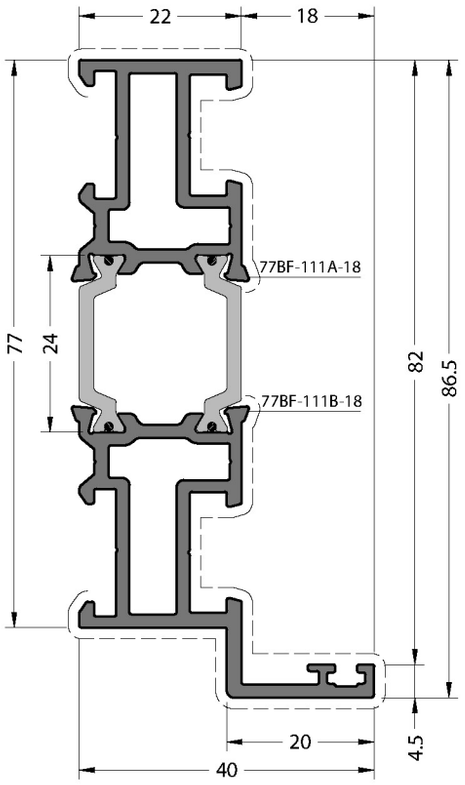

CODE / KOD
77BF-111-18

THEORETICAL WEIGHT
TEORİK AĞIRLIK (kg/m)
1.474

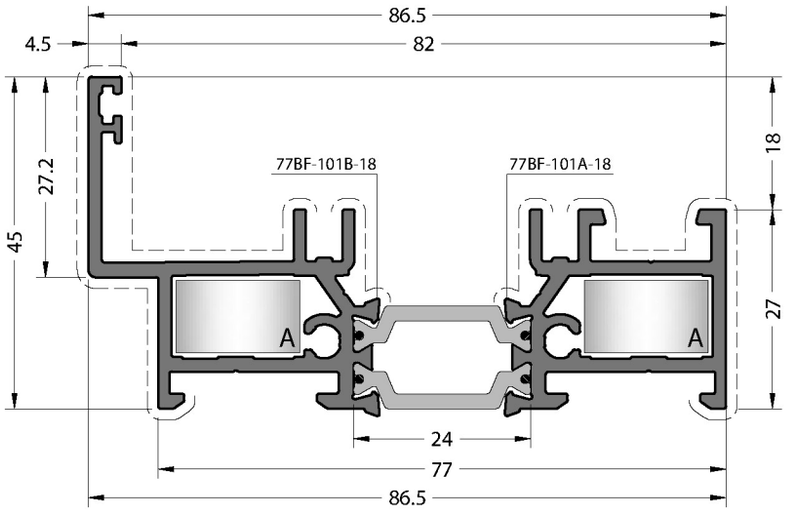

CODE / KOD
77BF-101-18

THEORETICAL WEIGHT
TEORİK AĞIRLIK (kg/m)
1.613

PRESS CORNER JOINT
PRES KÖŞE BAĞLANTI

A CC-101-17.4

MECHANICAL COR. JOINT
MEKANİK KÖŞE BAĞLANTI

A KC-801-17.2

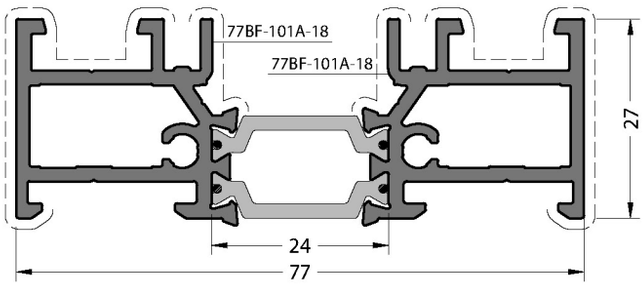

CODE / KOD
77BF-102-18

THEORETICAL WEIGHT
TEORİK AĞIRLIK (kg/m)
1.474

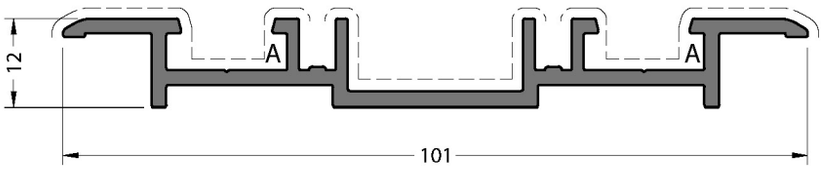

CODE / KOD
77BF-103-00

THEORETICAL WEIGHT
TEORİK AĞIRLIK (kg/m)
0.861

PRESS CORNER JOINT
PRES KÖŞE BAĞLANTI

A CA77BF-103

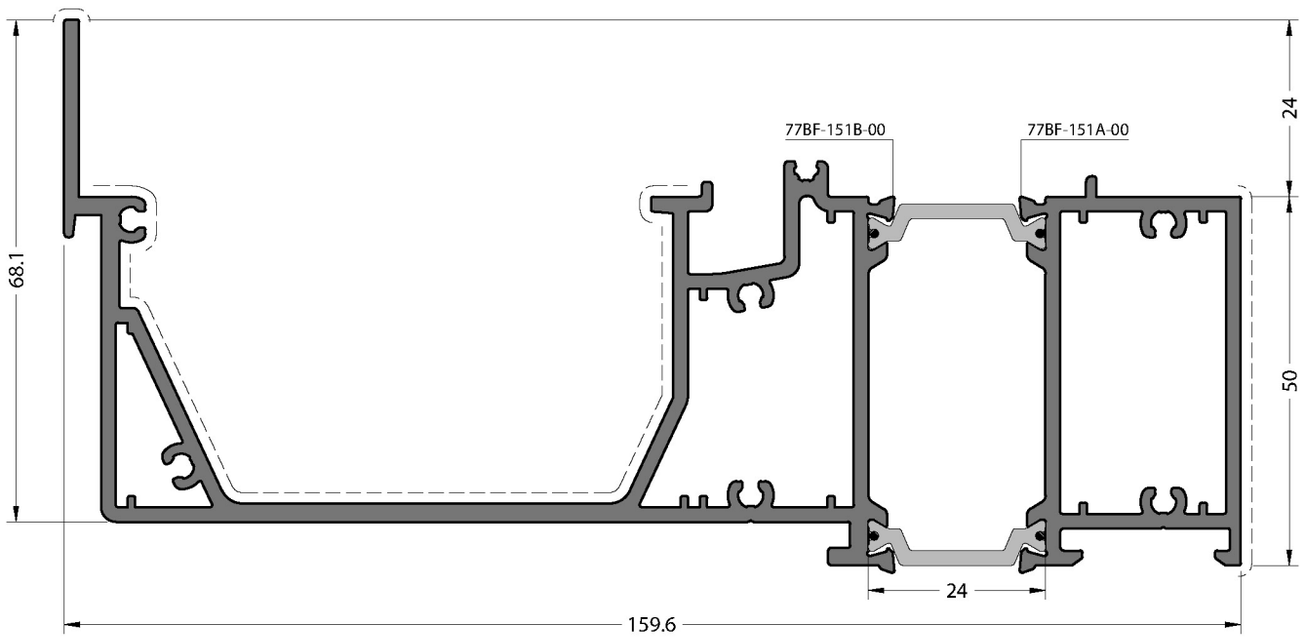

CODE / KOD	THEORETICAL WEIGHT TEORİK AĞIRLIK (kg/m)
77BF-151-00	3.330

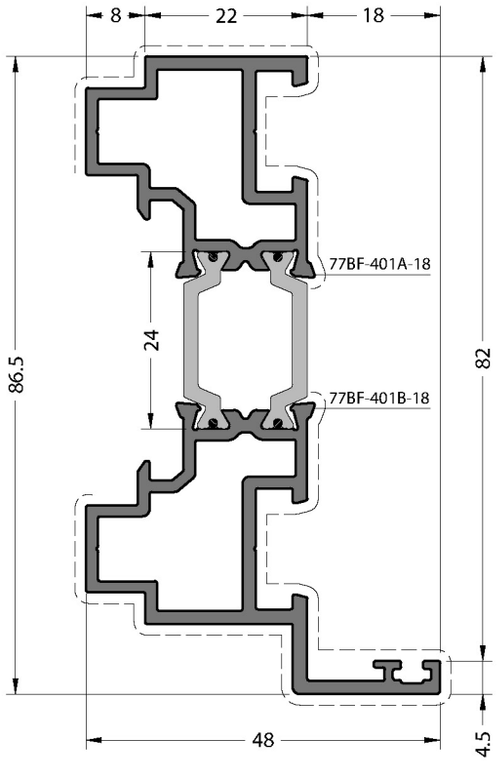

CODE / KOD	THEORETICAL WEIGHT TEORİK AĞIRLIK (kg/m)
77BF-401-18	1.510

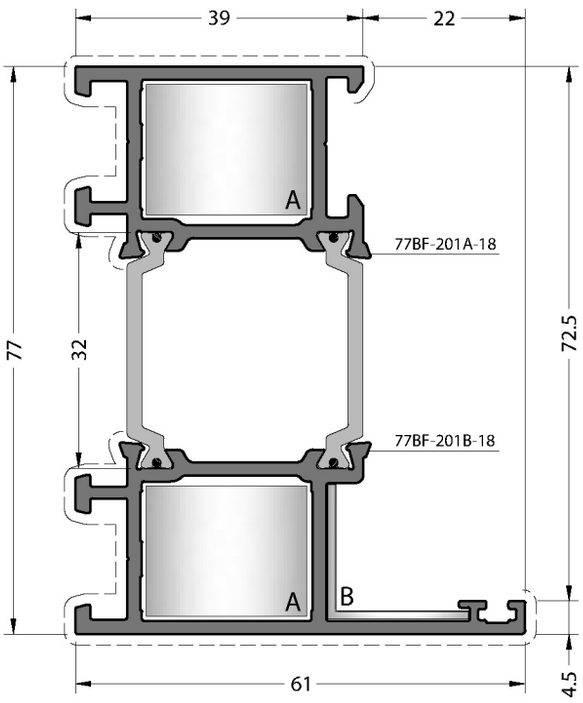

CODE / KOD

77BF-201-18

THEORETICAL WEIGHT
TEORİK AĞIRLIK (kg/m)

1.688

PRESS CORNER JOINT
PRES KÖŞE BAĞLANTI

A CC-103-18.3

B EM77BF-22

MECHANICAL COR. JOINT
MEKANİK KÖŞE BAĞLANTI

A KC-803-18.1

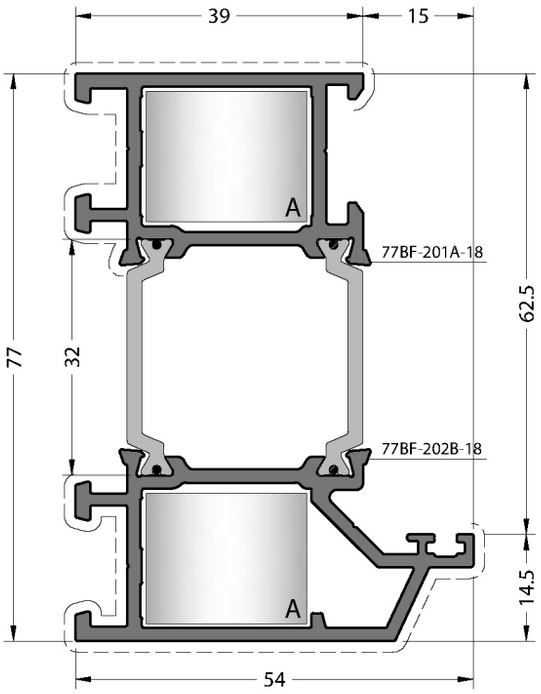

CODE / KOD

77BF-202-18

THEORETICAL WEIGHT
TEORİK AĞIRLIK (kg/m)

1.692

PRESS CORNER JOINT
PRES KÖŞE BAĞLANTI

A CC-103-18.3

MECHANICAL COR. JOINT
MEKANİK KÖŞE BAĞLANTI

A KC-803-18.1

Important Note / Önemli Not :
Not compatible with 77BF-202-18 Wing. Can only be used with the 77BF-201-18.
77BF-202-18 Kanat ile uyumlu değildir. Sadece **77BF-201-18** ile **kullanılabilir**.

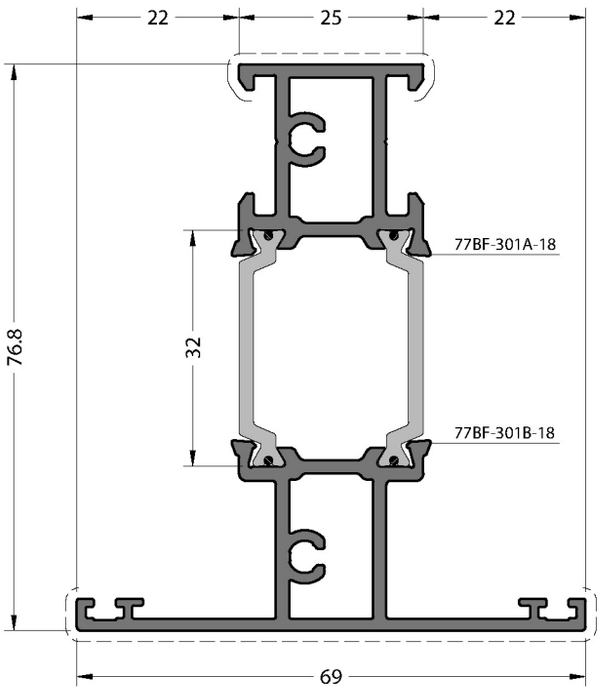

CODE / KOD
77BF-301-18

THEORETICAL WEIGHT
TEORİK AĞIRLIK (kg/m)
1.561

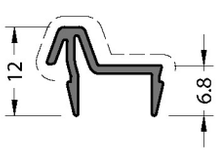

CODE / KOD
77BF-402-00

THEORETICAL WEIGHT
TEORİK AĞIRLIK (kg/m)
0.110

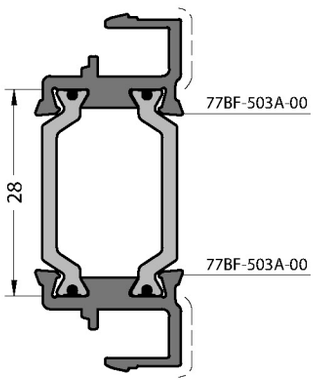

CODE / KOD
77BF-503-00

THEORETICAL WEIGHT
TEORİK AĞIRLIK (kg/m)
0.674

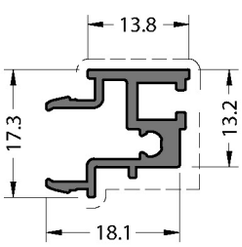

CODE / KOD
77BF-501-00

THEORETICAL WEIGHT
TEORİK AĞIRLIK (kg/m)
0.250

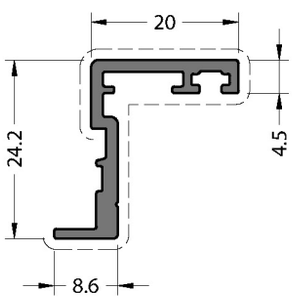

CODE / KOD
77BF-502-00

THEORETICAL WEIGHT
TEORİK AĞIRLIK (kg/m)
0.274

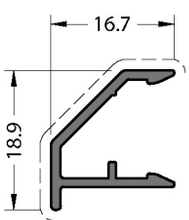

CODE / KOD
77BF-511-00

THEORETICAL WEIGHT
TEORİK AĞIRLIK (kg/m)
0.158

No visible surface.
Görünen yüzeyi yoktur.

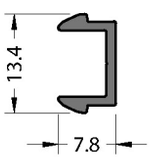

CODE / KOD
77BF-512-00

THEORETICAL WEIGHT
TEORİK AĞIRLIK (kg/m)
0.092

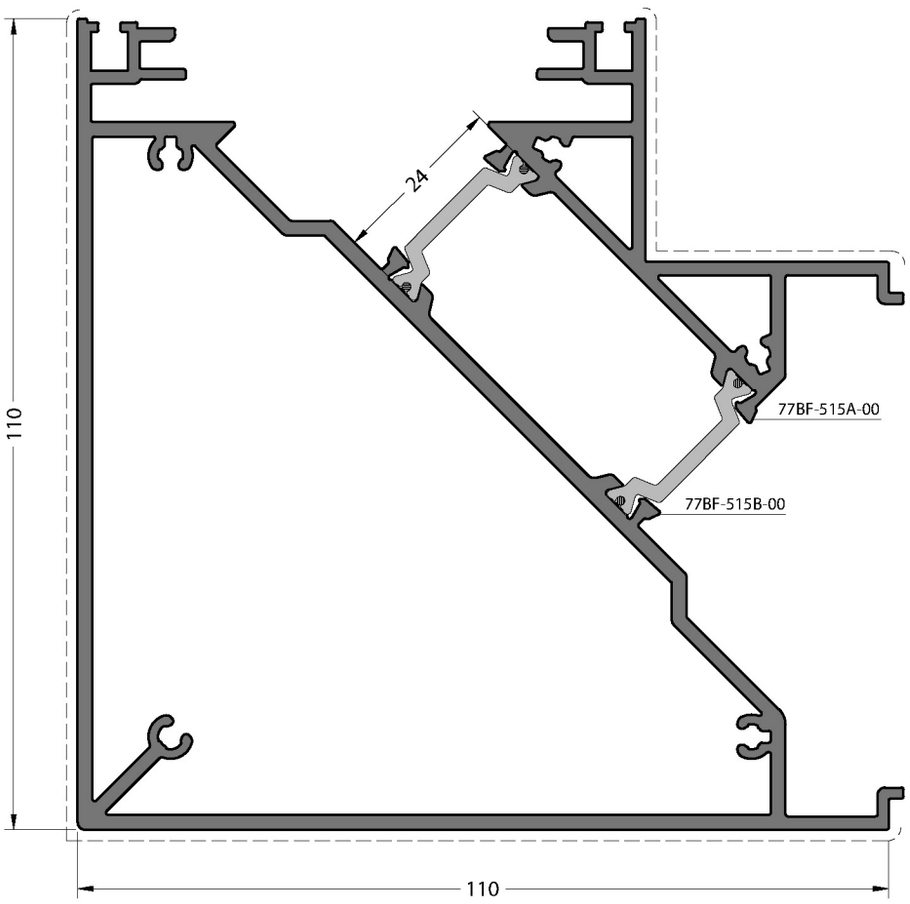

CODE / KOD

77BF-515-00

THEORETICAL WEIGHT
TEORİK AĞIRLIK (kg/m)

3.541

CAP / KAPAK

A EM77BF-515

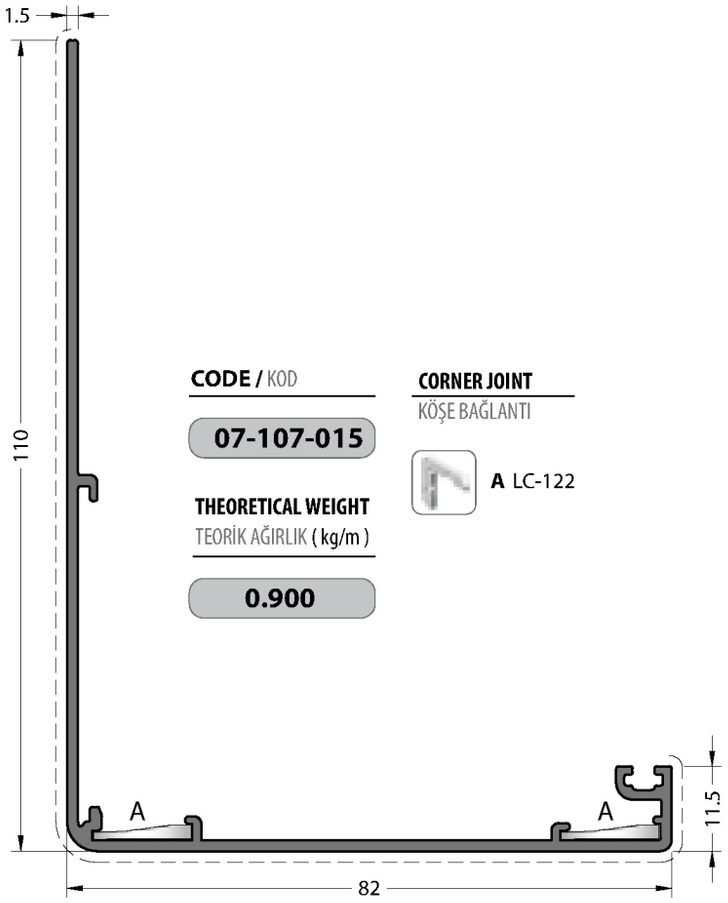

CODE / KOD
07-107-015

CORNER JOINT
KÖŞE BAĞLANTI
A LC-122

THEORETICAL WEIGHT
TEORİK AĞIRLIK (kg/m)
0.900

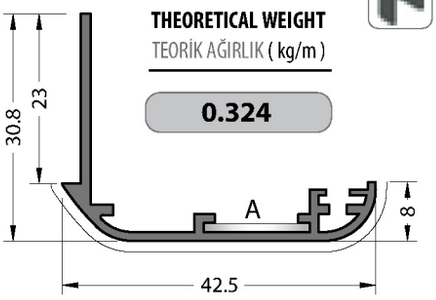

CODE / KOD
07-102-00

CORNER JOINT
KÖŞE BAĞLANTI
A MK-20.1

THEORETICAL WEIGHT
TEORİK AĞIRLIK (kg/m)
0.324

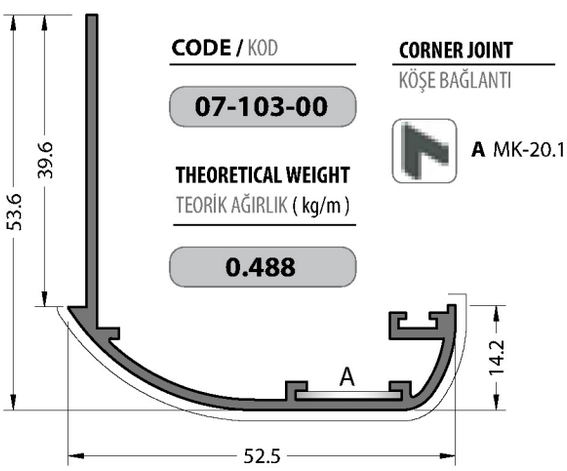

CODE / KOD
07-103-00

CORNER JOINT
KÖŞE BAĞLANTI
A MK-20.1

THEORETICAL WEIGHT
TEORİK AĞIRLIK (kg/m)
0.488

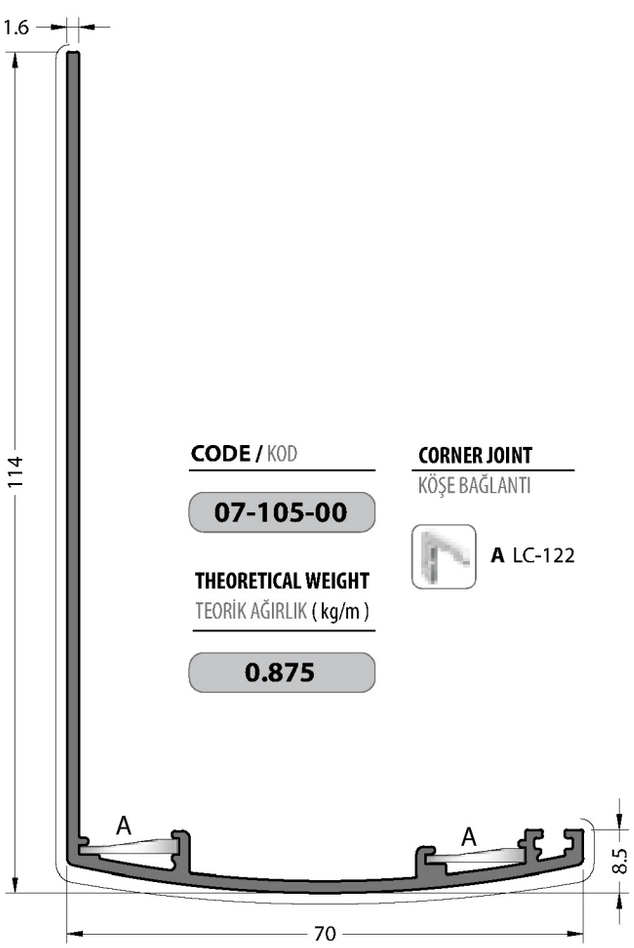

CODE / KOD
07-105-00

CORNER JOINT
KÖŞE BAĞLANTI
A LC-122

THEORETICAL WEIGHT
TEORİK AĞIRLIK (kg/m)
0.875

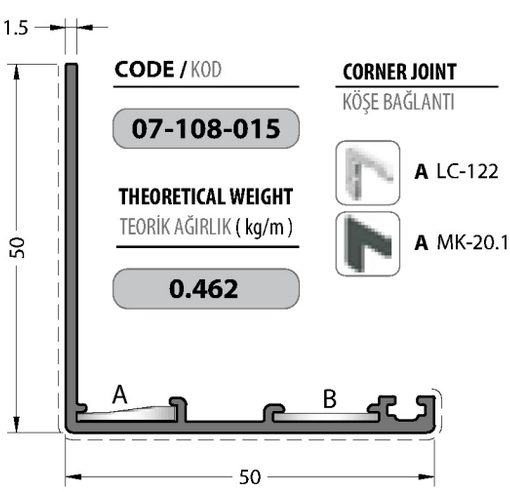

CODE / KOD
07-108-015

CORNER JOINT
KÖŞE BAĞLANTI
A LC-122
A MK-20.1

THEORETICAL WEIGHT
TEORİK AĞIRLIK (kg/m)
0.462

SAFETY GLAZING BEADS / GÜVENLİKLİ CAM ÇITALARI

77BF-201-18

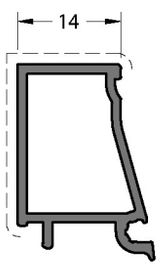

CODE / KOD

08-205-00

THEORETICAL WEIGHT
TEORİK AĞIRLIK (kg/m)

0.279

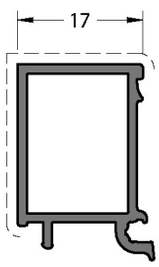

CODE / KOD

08-207-00

THEORETICAL WEIGHT
TEORİK AĞIRLIK (kg/m)

0.290

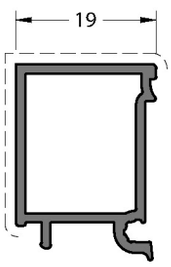

CODE / KOD

08-208-00

THEORETICAL WEIGHT
TEORİK AĞIRLIK (kg/m)

0.298

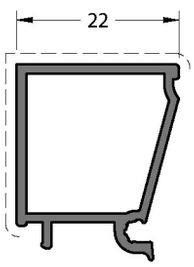

CODE / KOD

08-209-00

THEORETICAL WEIGHT
TEORİK AĞIRLIK (kg/m)

0.308

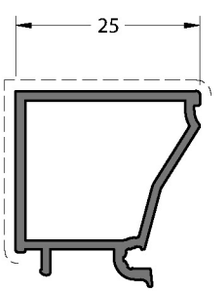

CODE / KOD

08-212-00

THEORETICAL WEIGHT
TEORİK AĞIRLIK (kg/m)

0.323

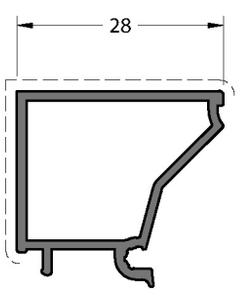

CODE / KOD

08-213-00

THEORETICAL WEIGHT
TEORİK AĞIRLIK (kg/m)

0.339

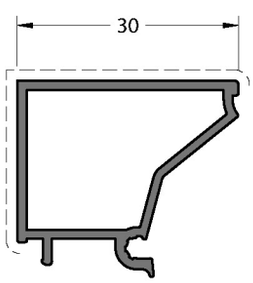

CODE / KOD

08-217-00

THEORETICAL WEIGHT
TEORİK AĞIRLIK (kg/m)

0.351

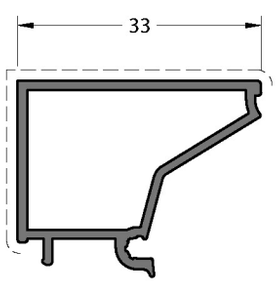

CODE / KOD

08-215-00

THEORETICAL WEIGHT
TEORİK AĞIRLIK (kg/m)

0.369

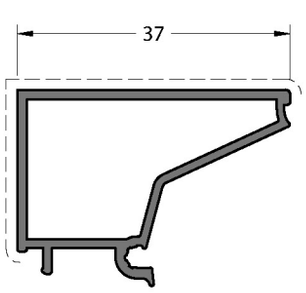

CODE / KOD

08-216-00

THEORETICAL WEIGHT
TEORİK AĞIRLIK (kg/m)

0.393

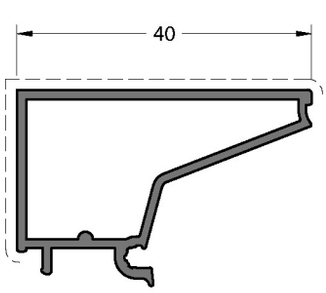

CODE / KOD

08-222-00

THEORETICAL WEIGHT
TEORİK AĞIRLIK (kg/m)

0.417

SAFETY GLAZING BEADS / GÜVENLİKLİ CAM ÇITALARI — 77BF-201-18

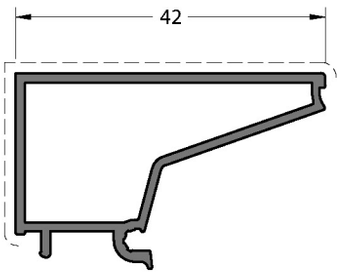

CODE / KOD: **08-221-00**

THEORETICAL WEIGHT
TEORİK AĞIRLIK (kg/m): **0.426**

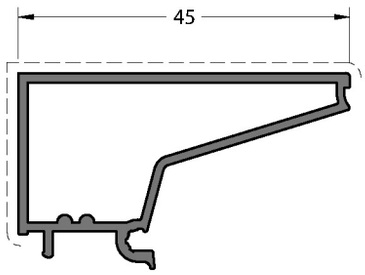

CODE / KOD: **08-223-00**

THEORETICAL WEIGHT
TEORİK AĞIRLIK (kg/m): **0.454**

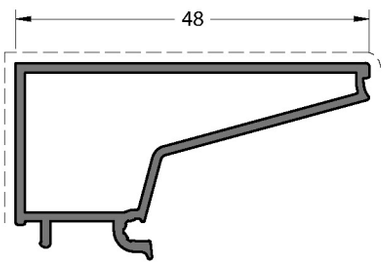

CODE / KOD: **08-224-00**

THEORETICAL WEIGHT
TEORİK AĞIRLIK (kg/m): **0.465**

STANDARD GLAZING BEADS / STANDART CAM ÇITALARI — 77BF-201-18

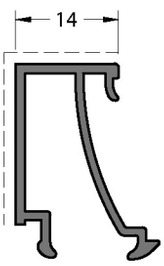

CODE / KOD: **08-105-00**

THEORETICAL WEIGHT
TEORİK AĞIRLIK (kg/m): **0.259**

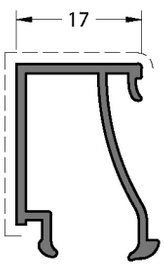

CODE / KOD: **08-107-00**

THEORETICAL WEIGHT
TEORİK AĞIRLIK (kg/m): **0.262**

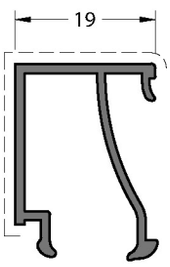

CODE / KOD: **08-108-00**

THEORETICAL WEIGHT
TEORİK AĞIRLIK (kg/m): **0.269**

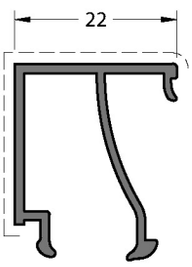

CODE / KOD: **08-109-00**

THEORETICAL WEIGHT
TEORİK AĞIRLIK (kg/m): **0.280**

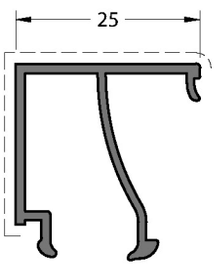

CODE / KOD: **08-112-00**

THEORETICAL WEIGHT
TEORİK AĞIRLIK (kg/m): **0.291**

STANDARD GLAZING BEADS / STANDART CAM ÇITALARI 77BF-201-18

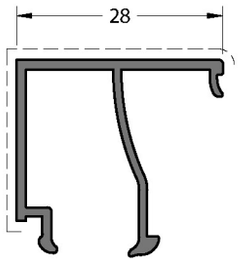

CODE / KOD
08-113-00
THEORETICAL WEIGHT
TEORİK AĞIRLIK (kg/m)
0.300

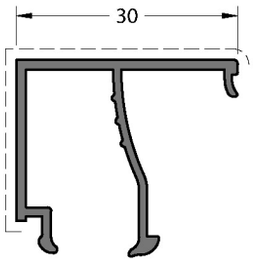

CODE / KOD
08-117-00
THEORETICAL WEIGHT
TEORİK AĞIRLIK (kg/m)
0.309

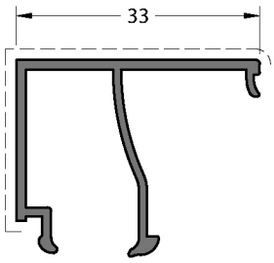

CODE / KOD
08-115-00
THEORETICAL WEIGHT
TEORİK AĞIRLIK (kg/m)
0.317

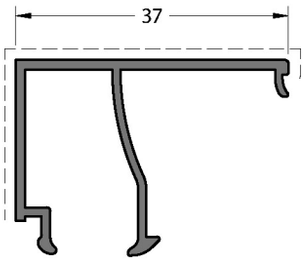

CODE / KOD
08-116-00
THEORETICAL WEIGHT
TEORİK AĞIRLIK (kg/m)
0.330

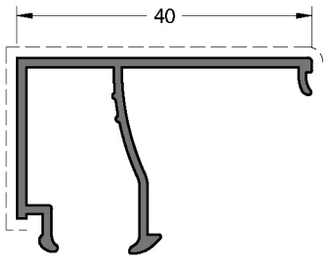

CODE / KOD
08-122-00
THEORETICAL WEIGHT
TEORİK AĞIRLIK (kg/m)
0.342

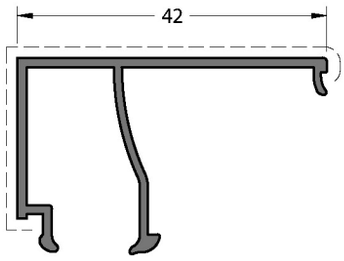

CODE / KOD
08-121-00
THEORETICAL WEIGHT
TEORİK AĞIRLIK (kg/m)
0.349

STANDARD GLAZING BEADS / STANDART CAM ÇITALARI 77BF-202-18

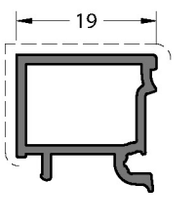

CODE / KOD
08-308-00
THEORETICAL WEIGHT
TEORİK AĞIRLIK (kg/m)
0.244

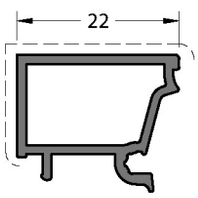

CODE / KOD
08-309-00
THEORETICAL WEIGHT
TEORİK AĞIRLIK (kg/m)
0.258

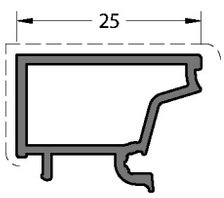

CODE / KOD
08-312-00
THEORETICAL WEIGHT
TEORİK AĞIRLIK (kg/m)
0.276

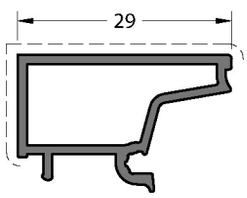

CODE / KOD
08-314-00
THEORETICAL WEIGHT
TEORİK AĞIRLIK (kg/m)
0.302

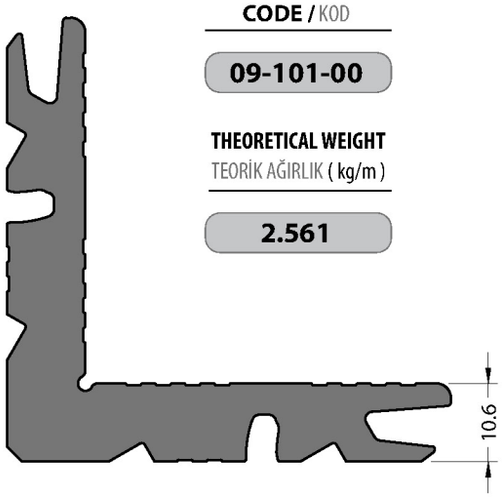

No visible surface.
Görünen yüzeyi yoktur.

CODE / KOD

09-101-00

THEORETICAL WEIGHT
TEORİK AĞIRLIK (kg/m)

2.561

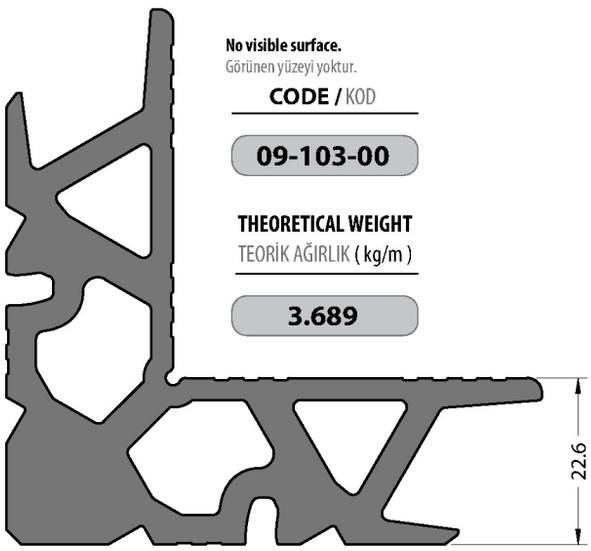

No visible surface.
Görünen yüzeyi yoktur.

CODE / KOD

09-103-00

THEORETICAL WEIGHT
TEORİK AĞIRLIK (kg/m)

3.689

90°
DETAILS
DETAYLAR

2 SASH / KANAT

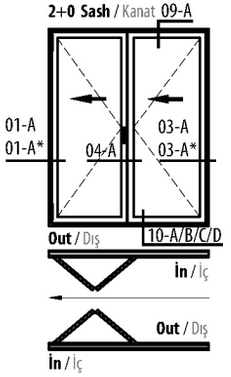

3 SASH / KANAT

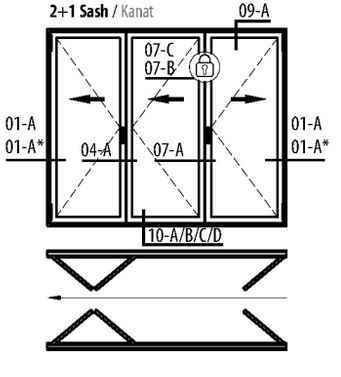

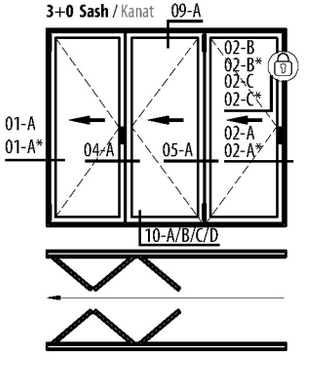

4 SASH / KANAT

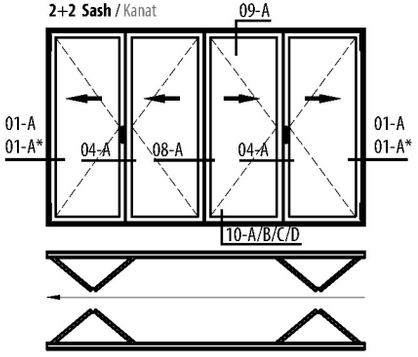

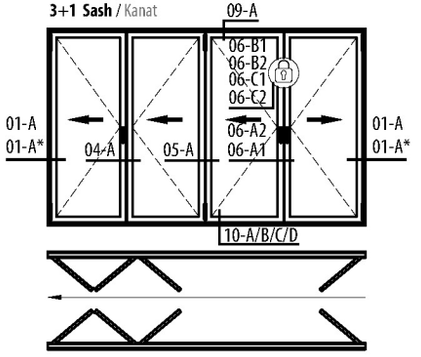

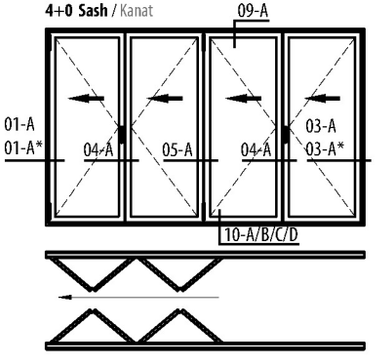

5 SASH / KANAT

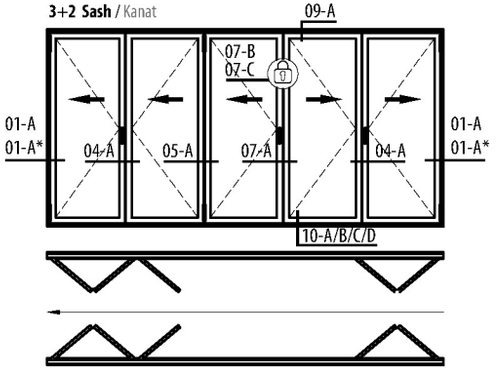

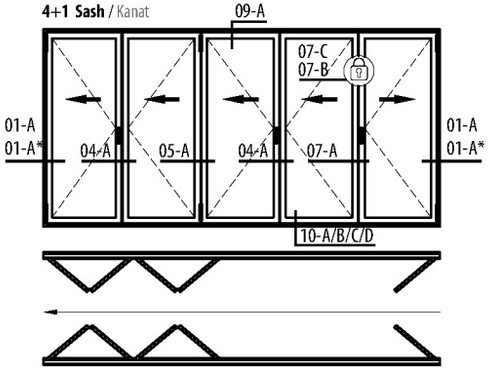

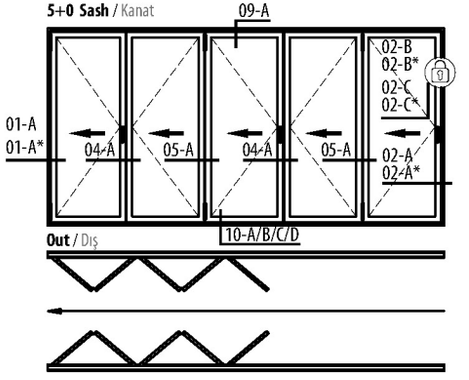

Security lock applicable
Güvenlik kilidi

6 SASH / KANAT

3+3 Sash / Kanat

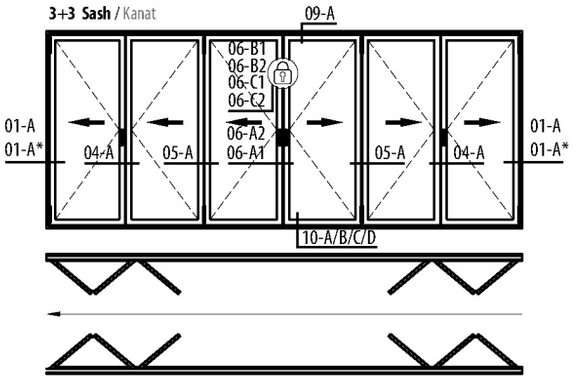

4+2 Sash / Kanat

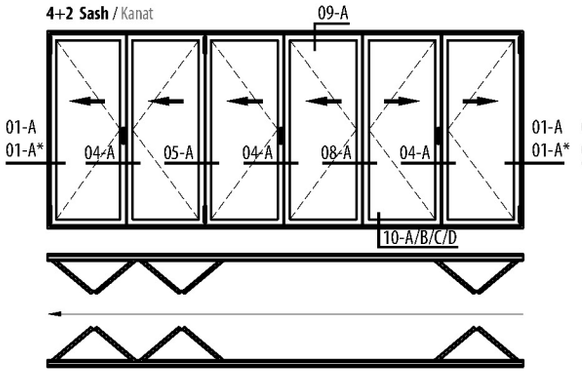

5+1 Sash / Kanat

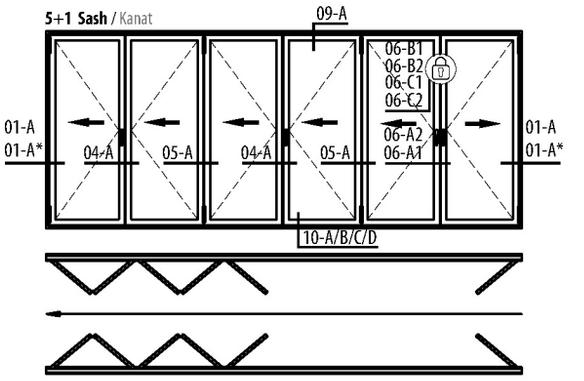

6 SASH / KANAT

6+0 Sash / Kanat

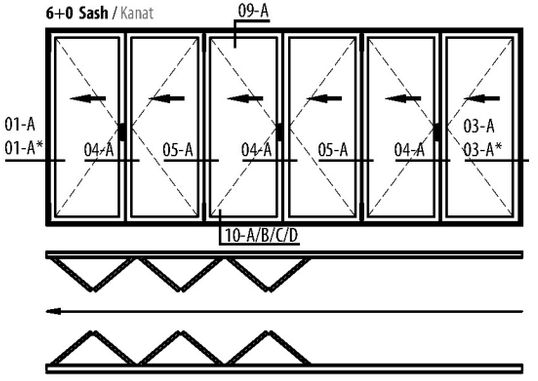

7 SASH / KANAT

4 +3 Sash / Kanat

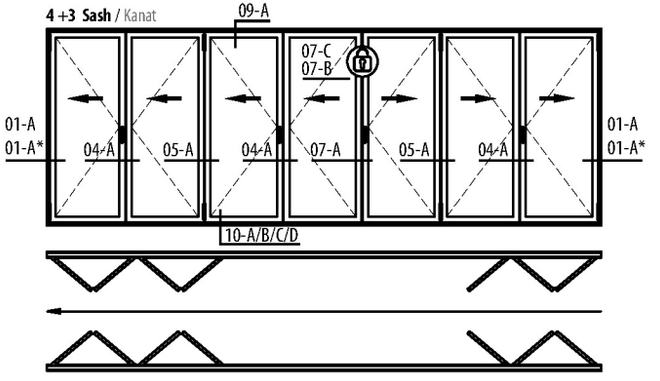

5+2 Sash / Kanat

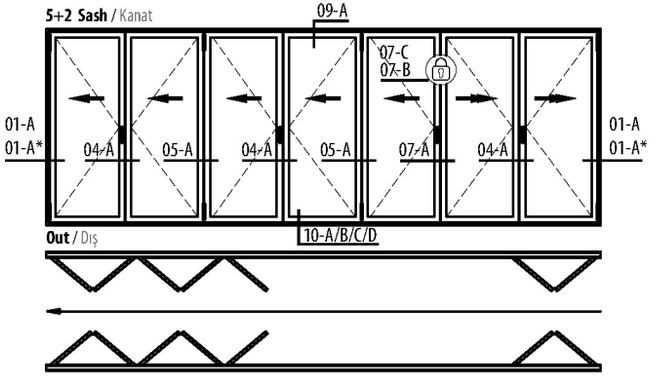

Out / Dış

6+1 Sash / Kanat

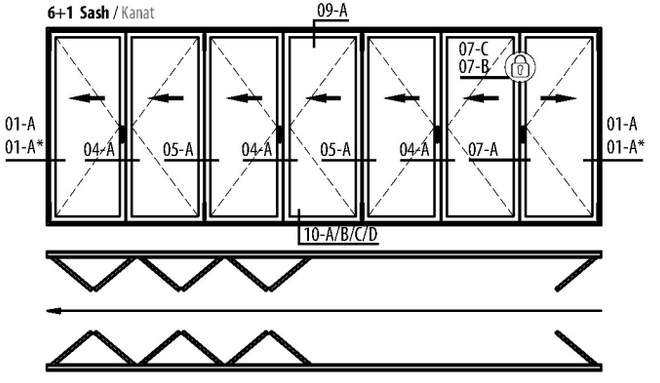

7+0 Sash / Kanat

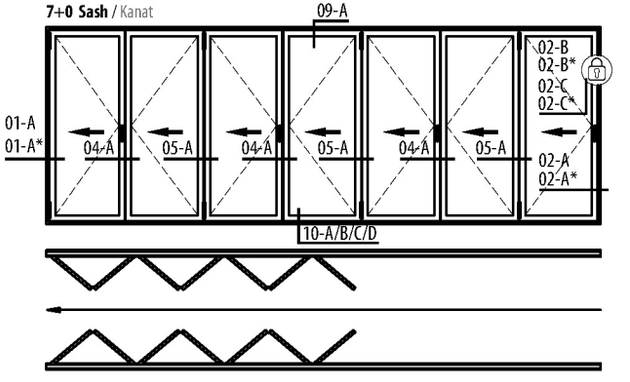

Security lock applicable
Güvenlik kilidi

8 SASH / KANAT

4+4 Sash / Kanat

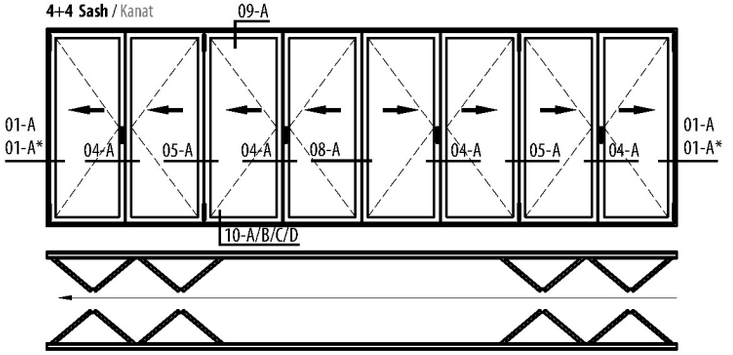

5+3 Sash / Kanat

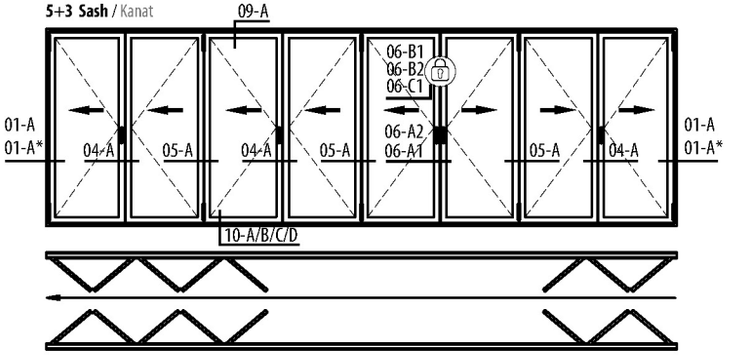

6+2 Sash / Kanat

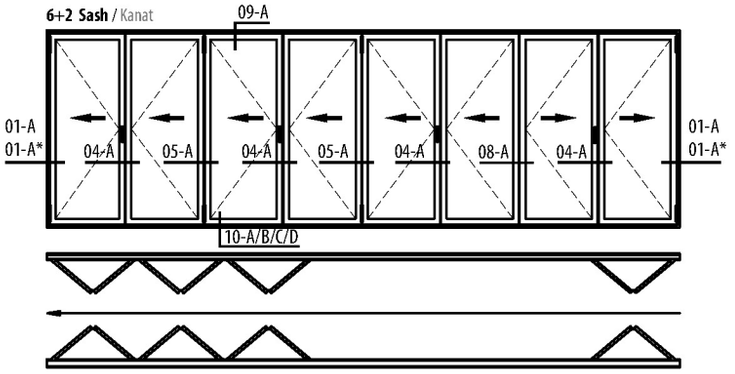

7+1 Sash / Kanat

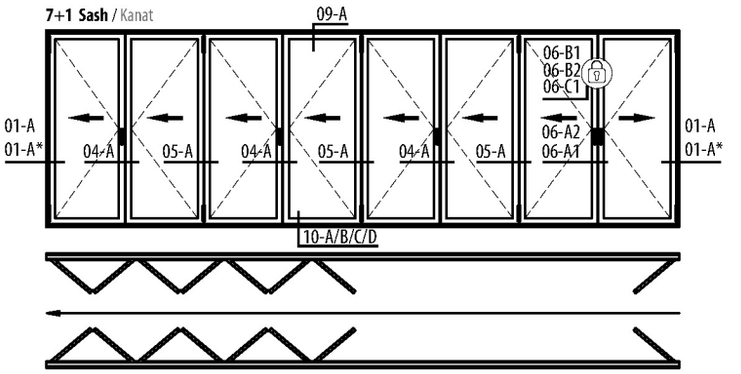

9 SASH / KANAT

5+4 Sash / Kanat

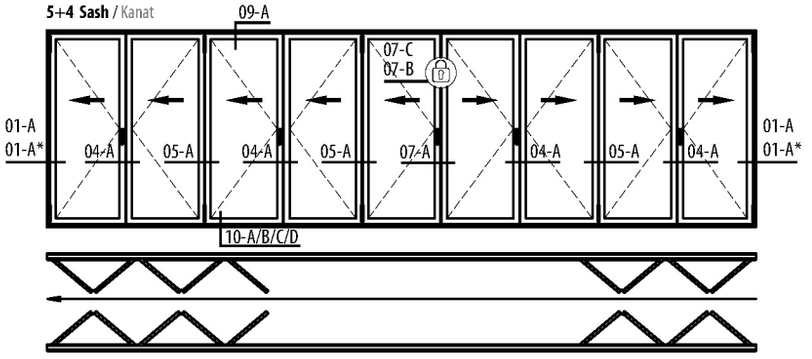

6+3 Sash / Kanat

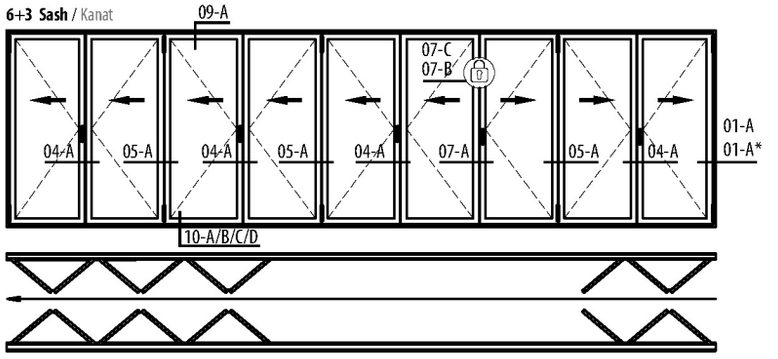

Security lock applicable
Güvenlik kilidi

9 SASH / KANAT

7+2 Sash / Kanat

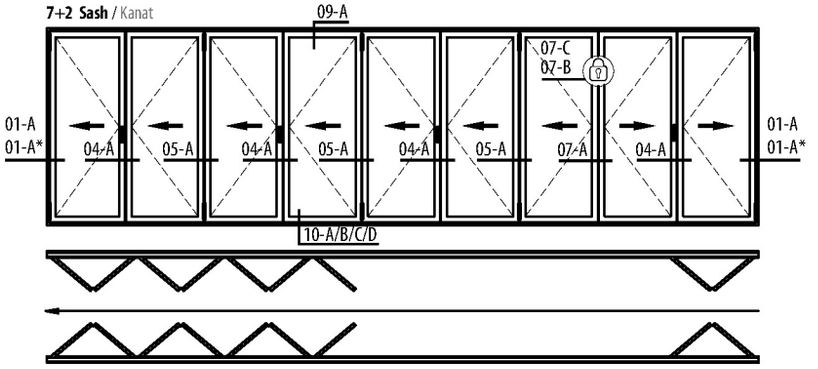

10 SASH / KANAT

6+4 Sash / Kanat

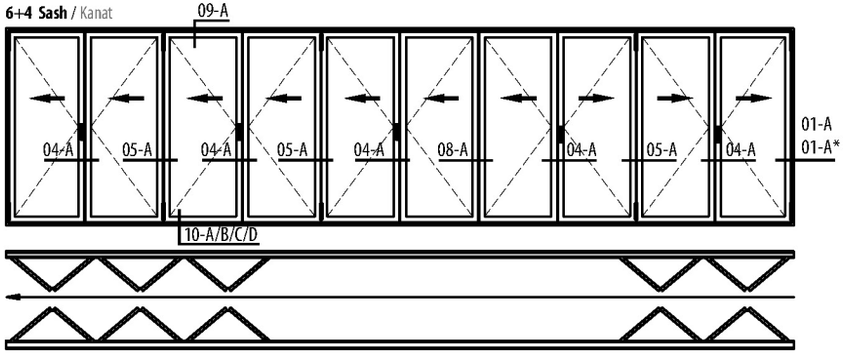

10 SASH / KANAT

5+5 Sash / Kanat

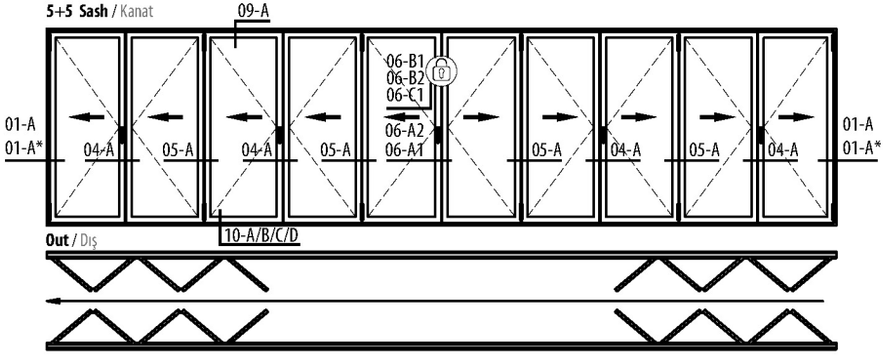

11 SASH / KANAT

6+5 Sash / Kanat

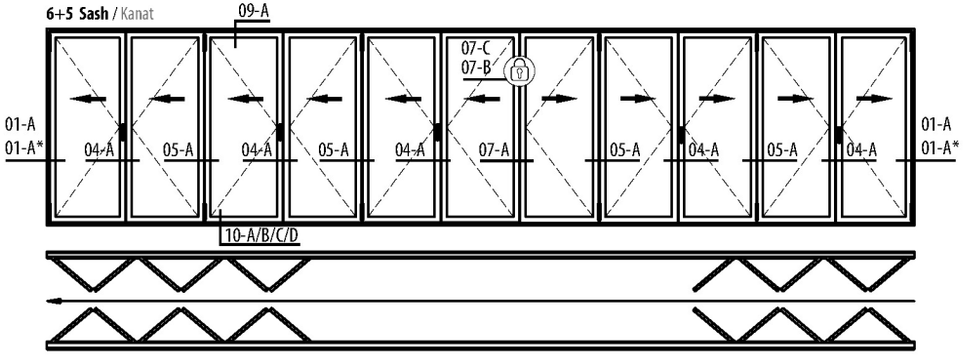

7+3 Sash / Kanat

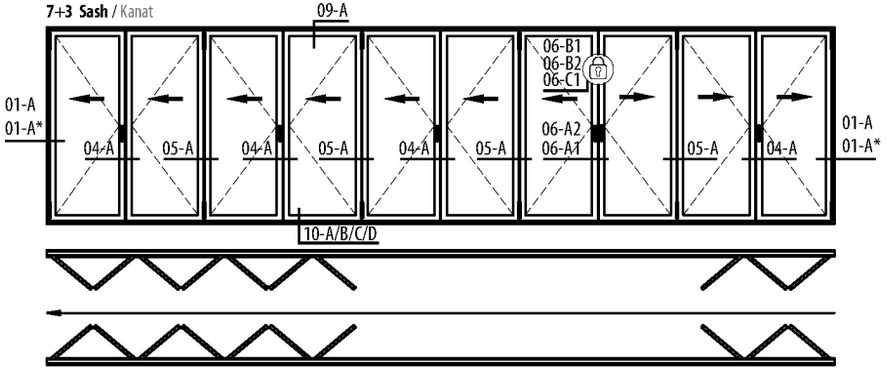

7+4 Sash / Kanat

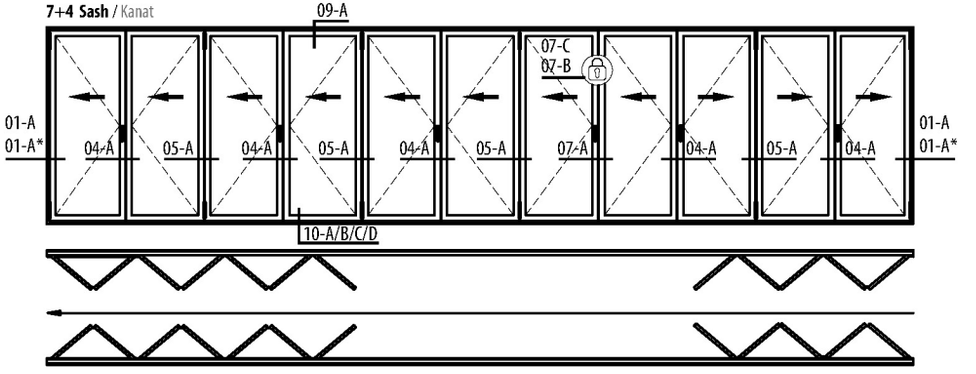

Security lock applicable
Güvenlik kilidi

12 SASH / KANAT

6+6 Sash / Kanat

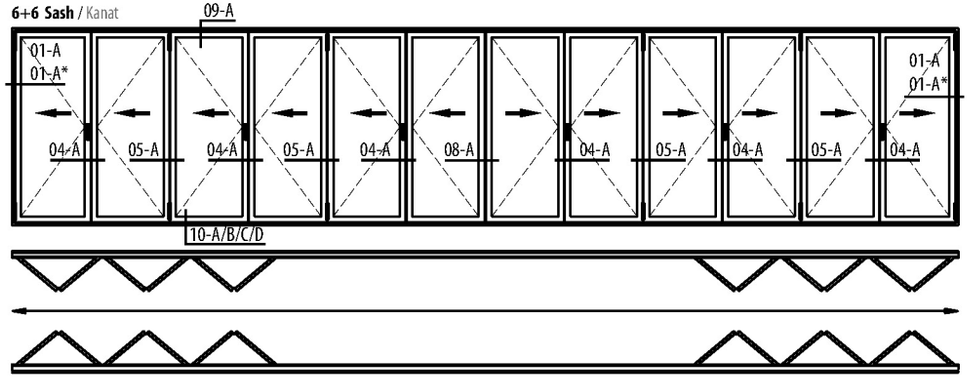

7+5 Sash / Kanat

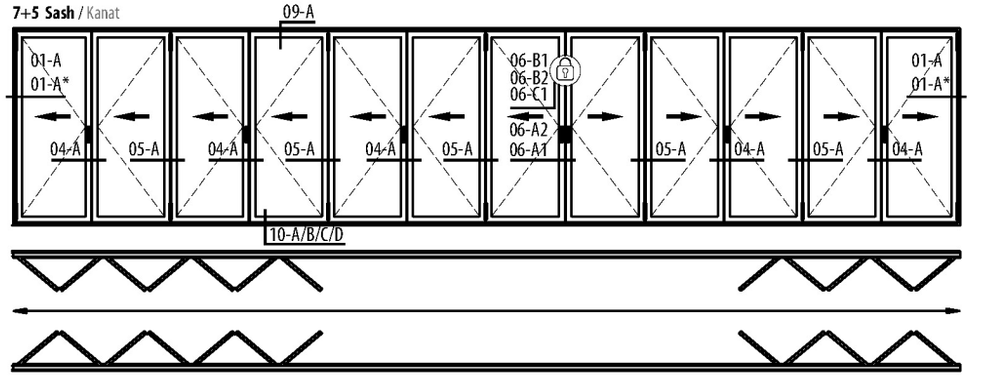

13 SASH / KANAT

7+6 Sash / Kanat

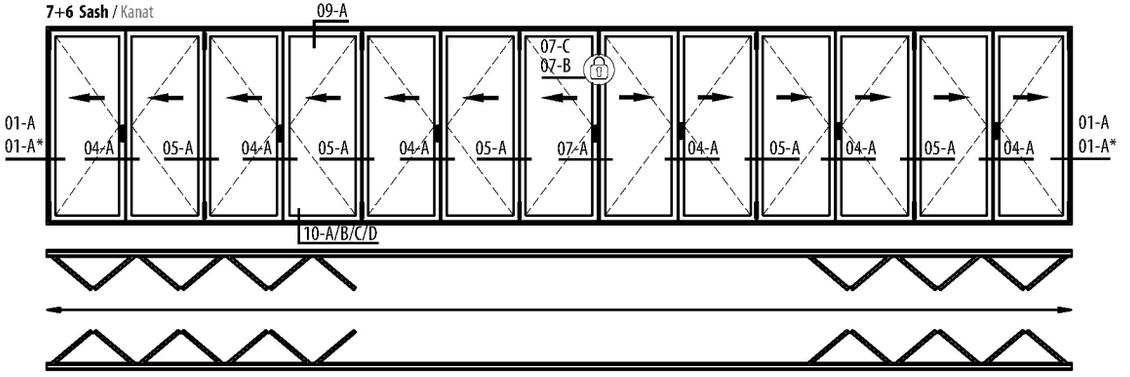

14 SASH / KANAT

7+7 Sash / Kanat

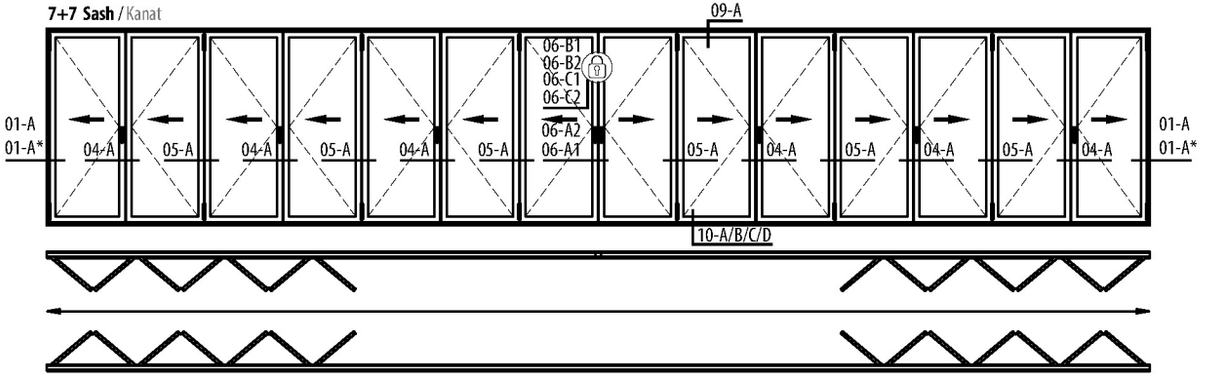

CORNER / KÖŞE

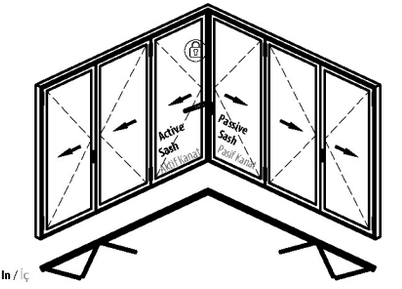

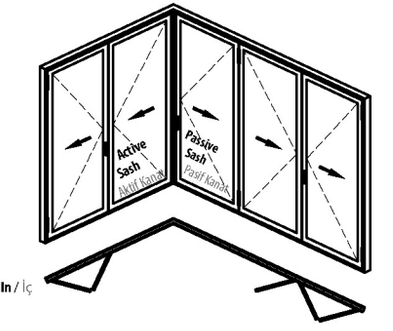

Security lock applicable
Güvenlik kilidi

Frame Connection 90°/ Kasa Birleşim 90°

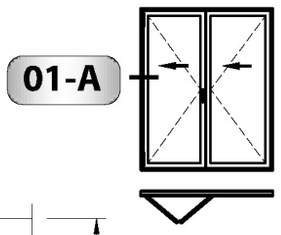

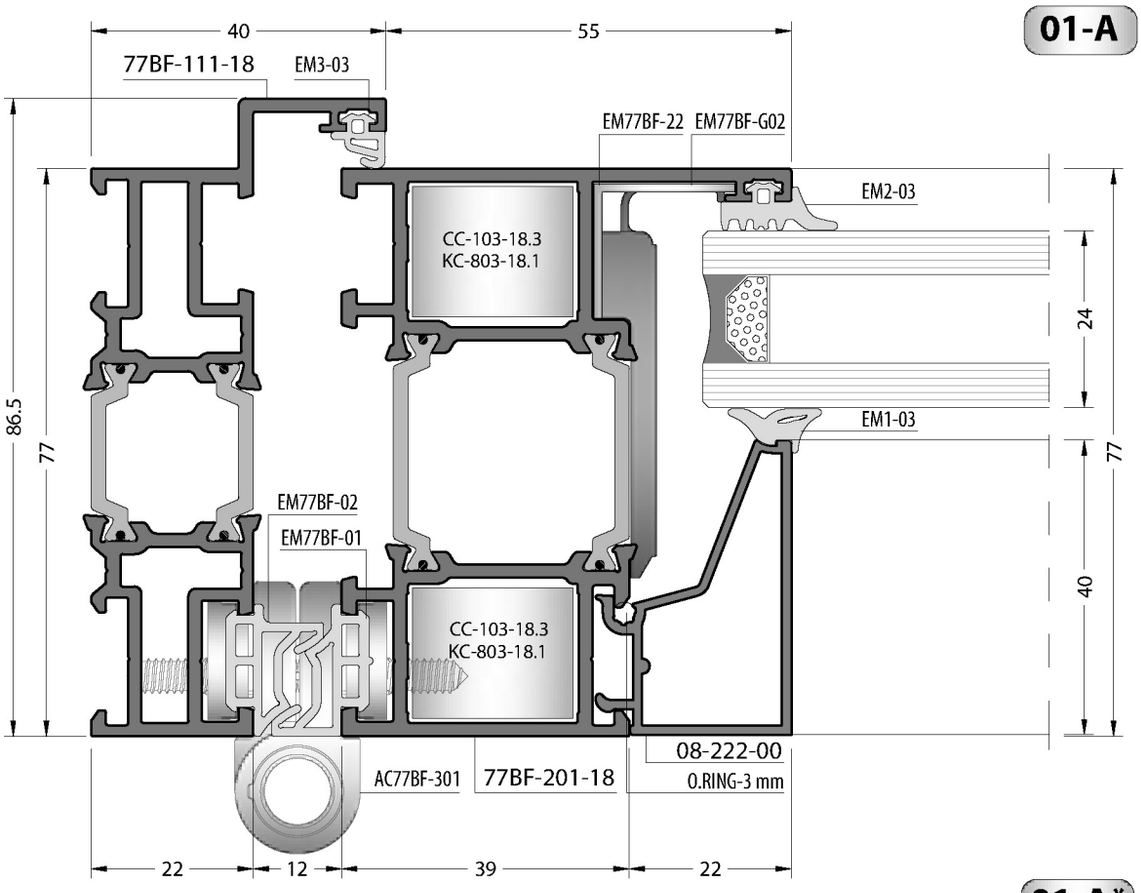

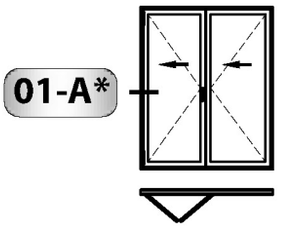

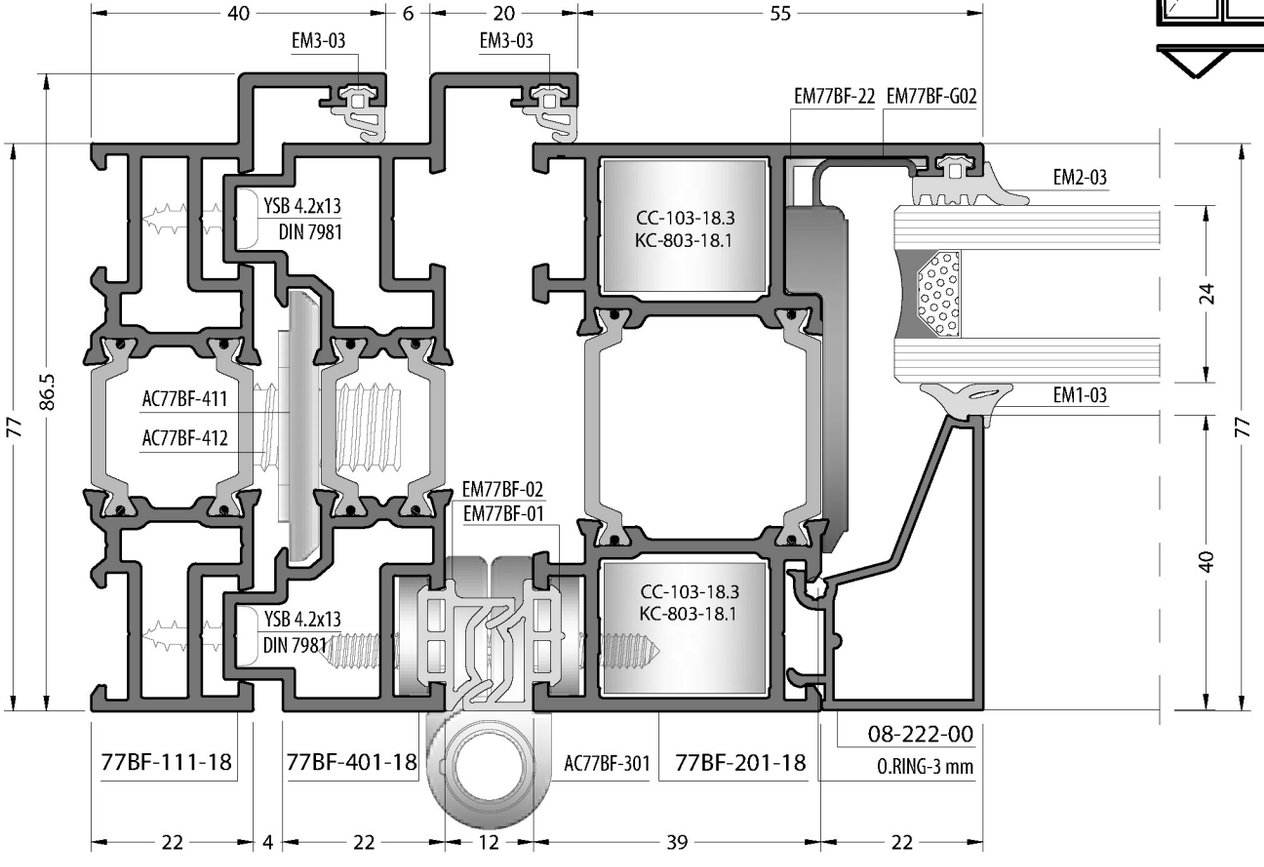

Frame Connection 90°/ Kasa Birleşim 90°

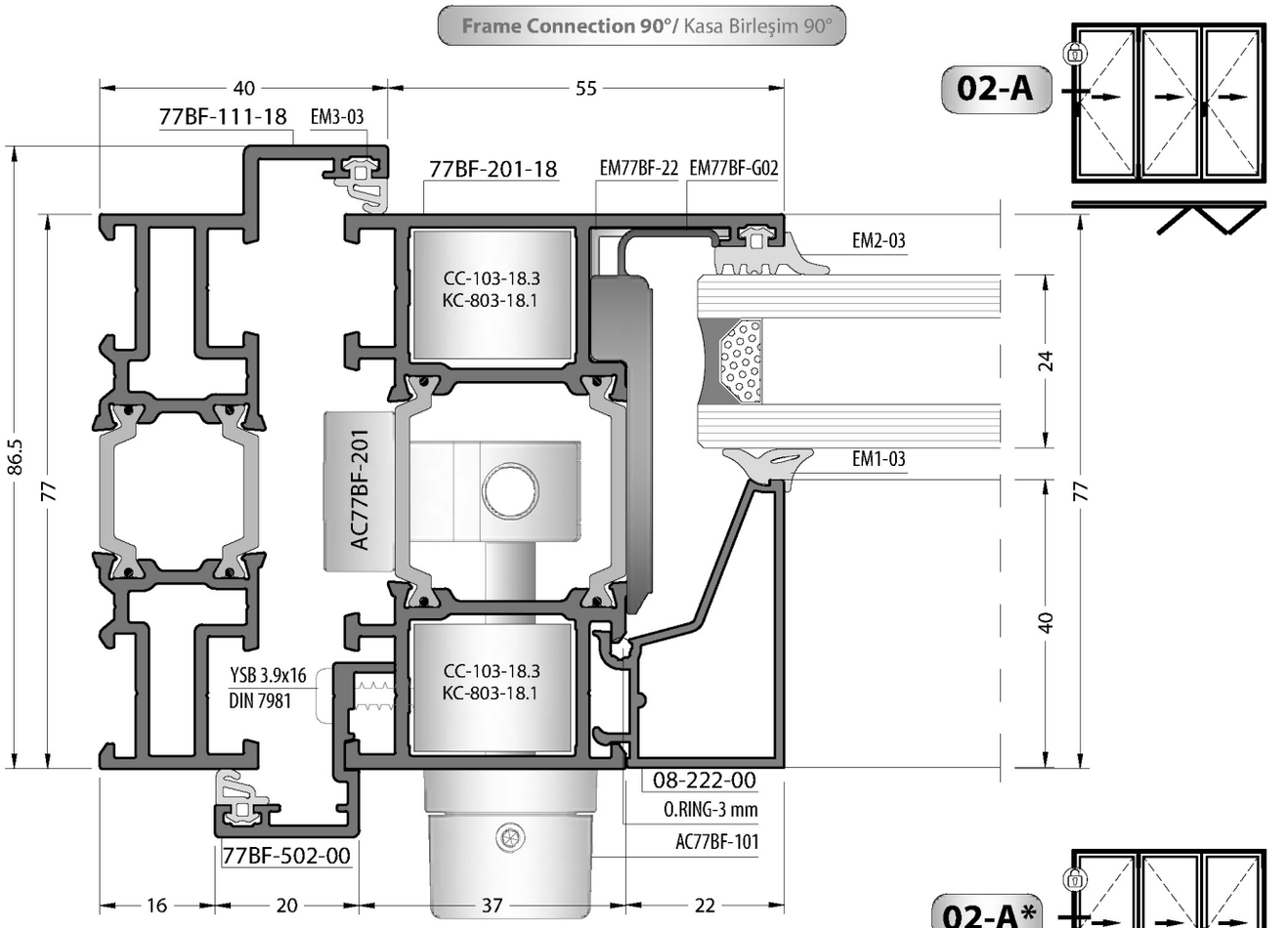

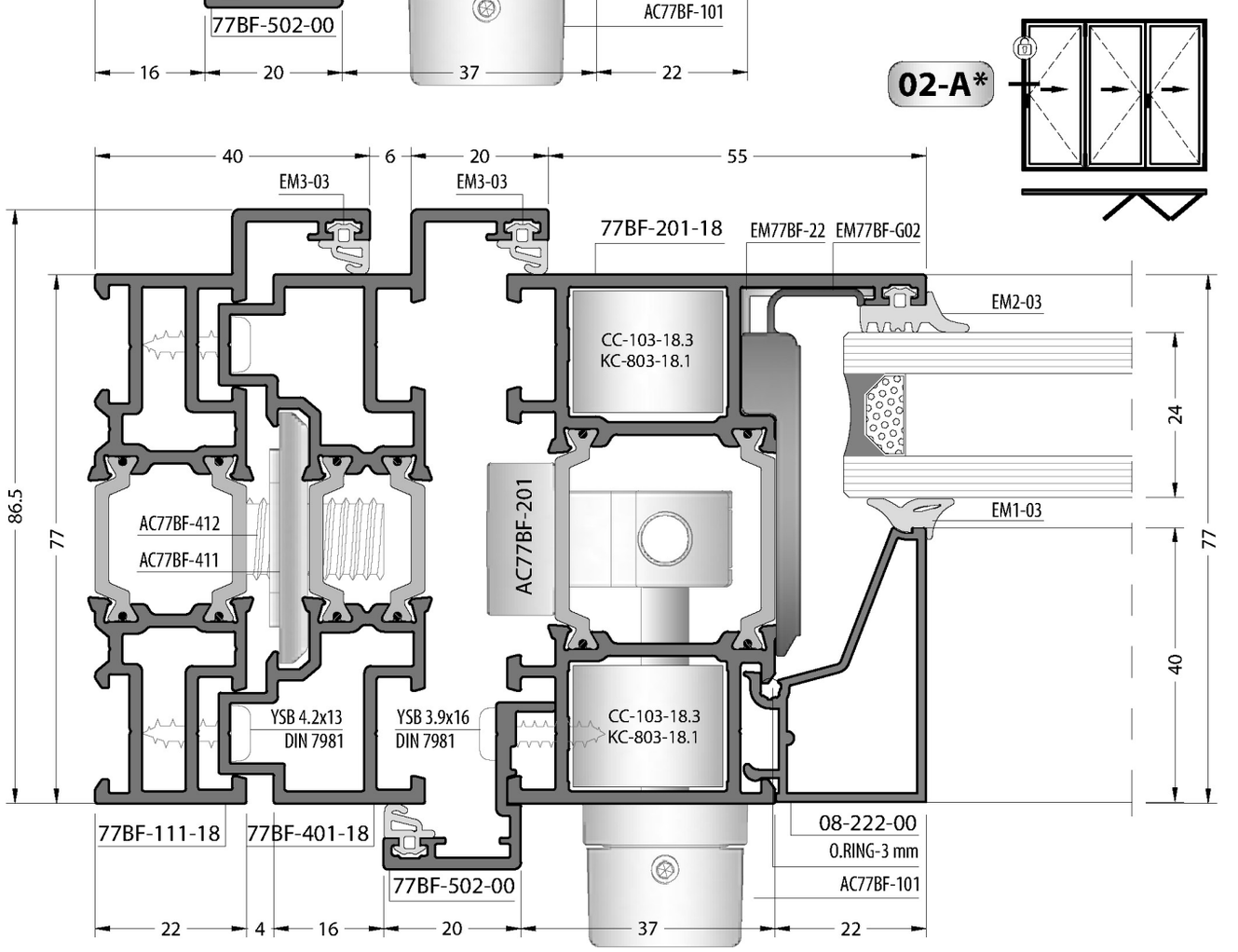

Frame Connection 90°/ Kasa Birleşim 90°

02-B

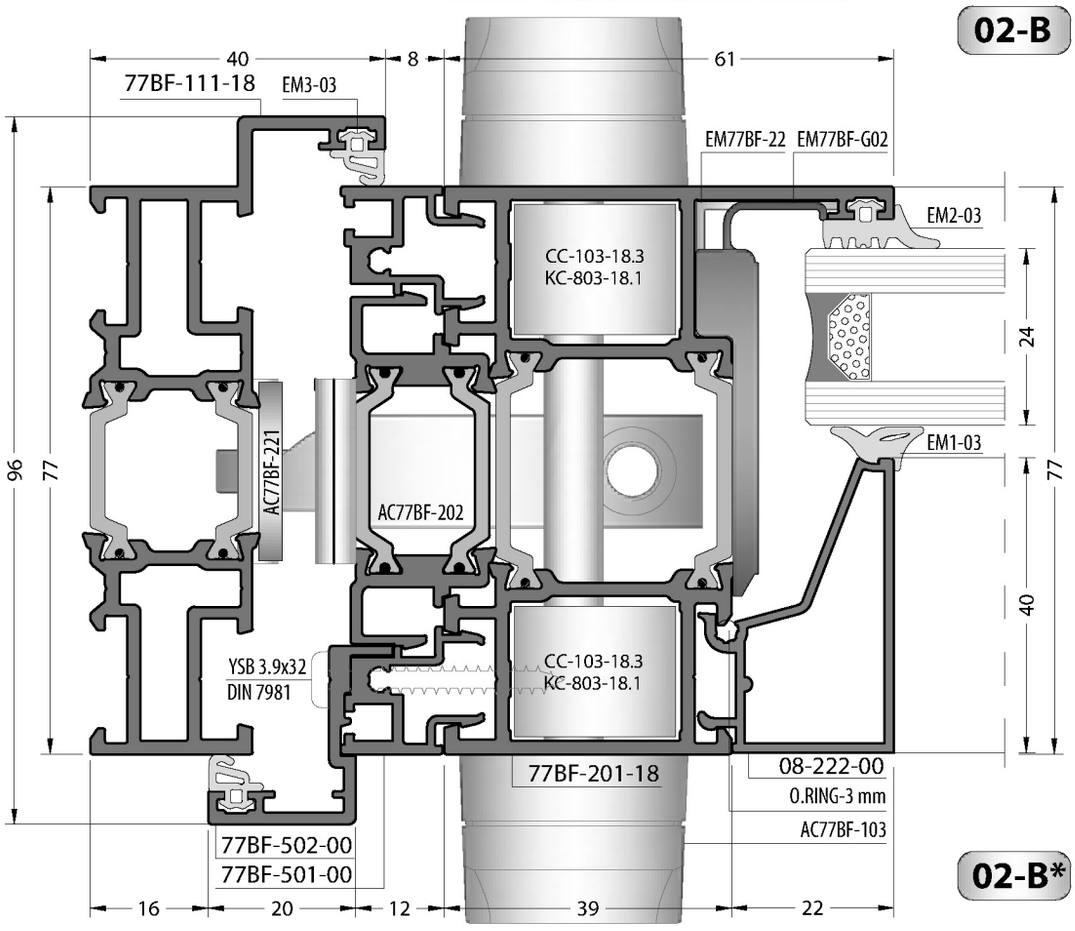

02-B*

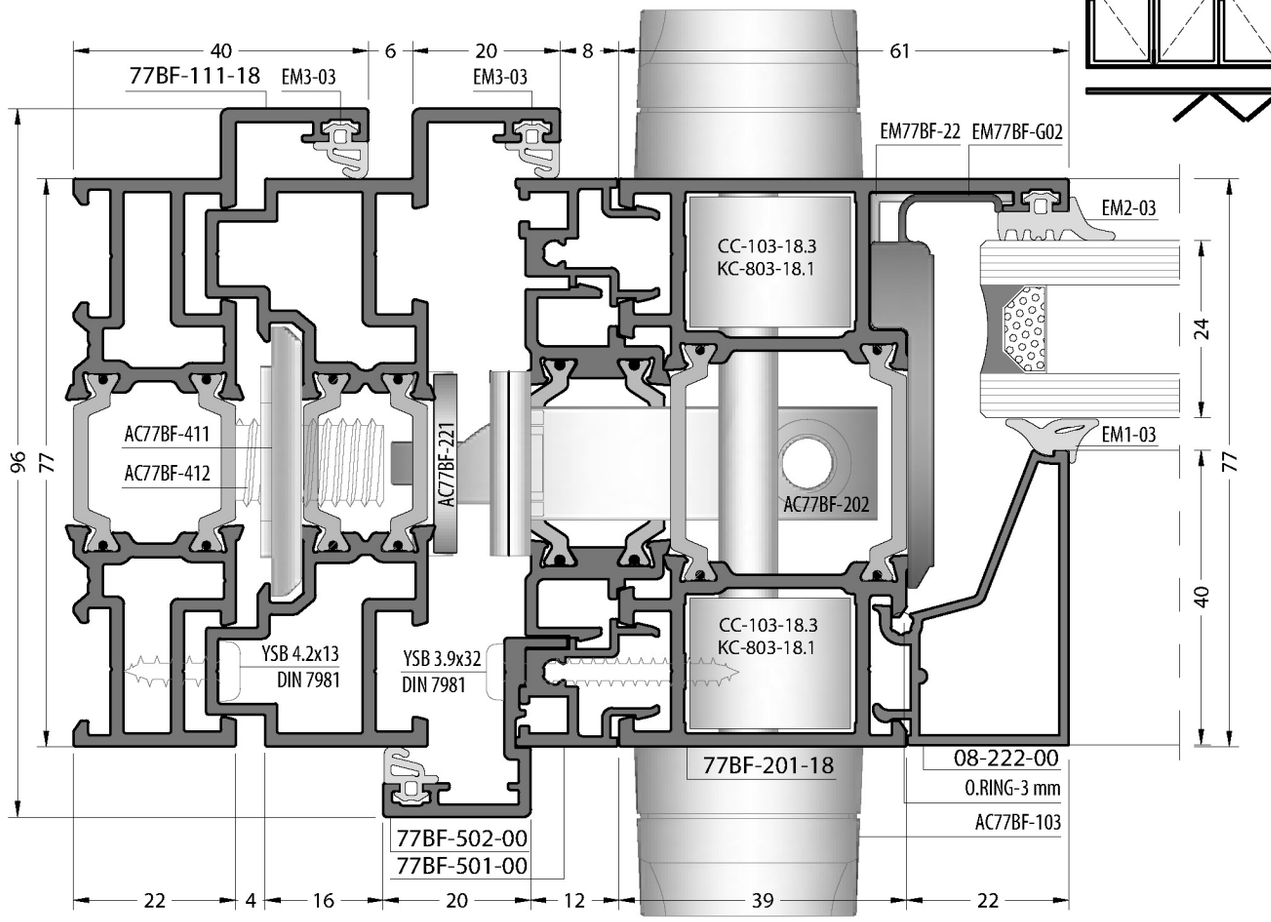

Frame Connection 90°/ Kasa Birleşim 90°

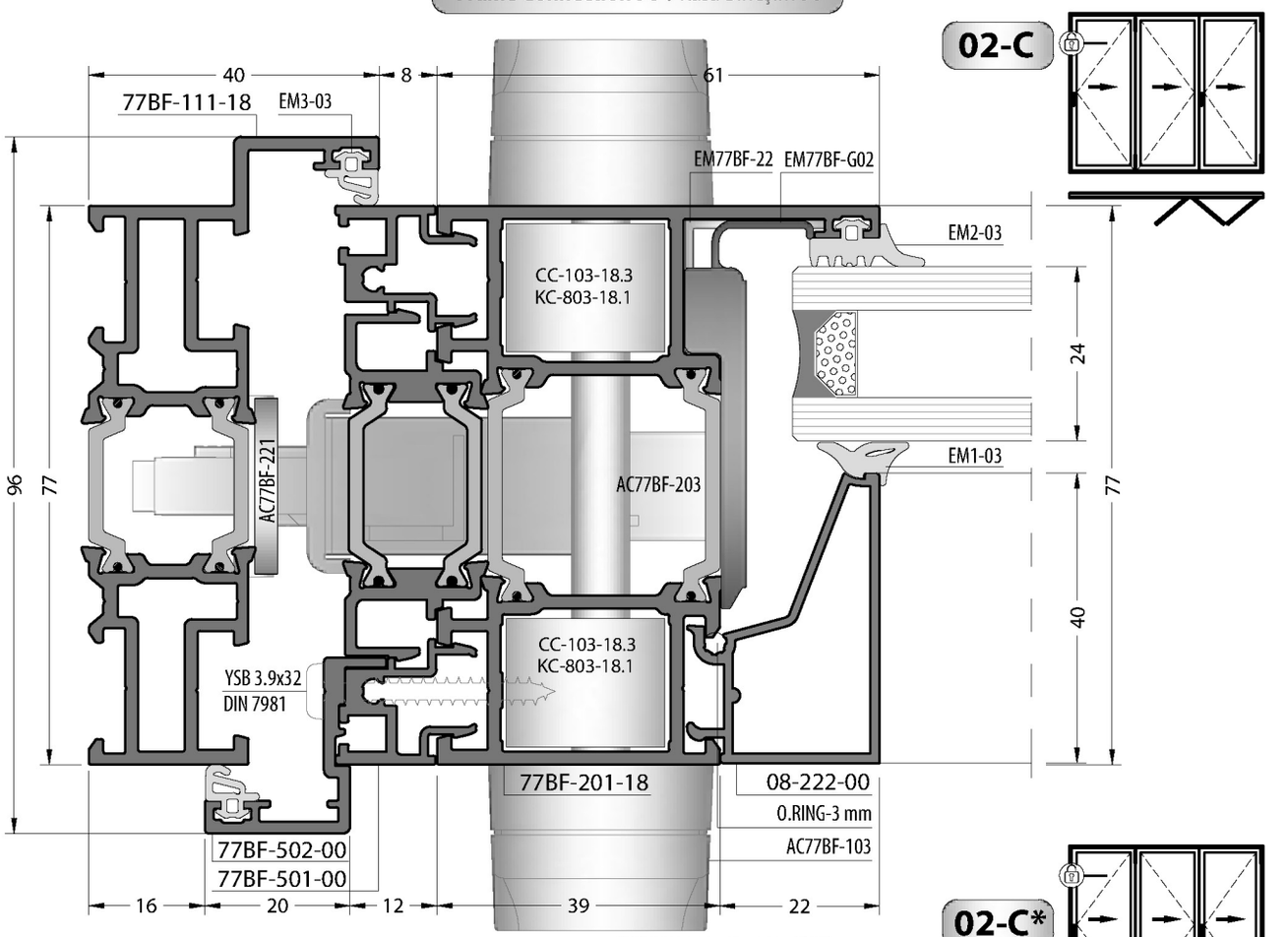

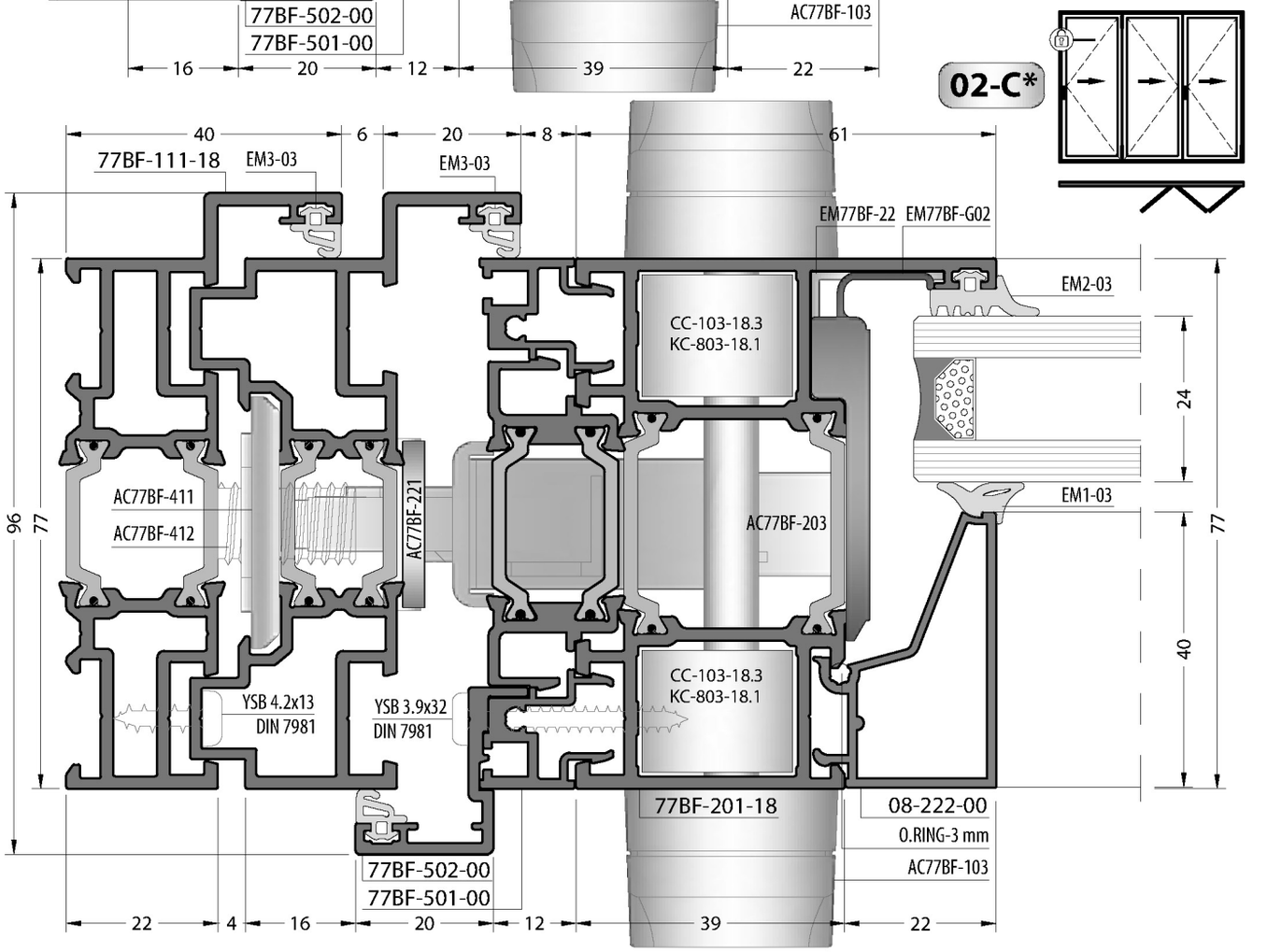

Frame Connection 90°/ Kasa Birleşim 90°

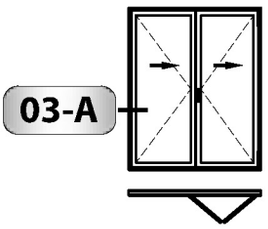

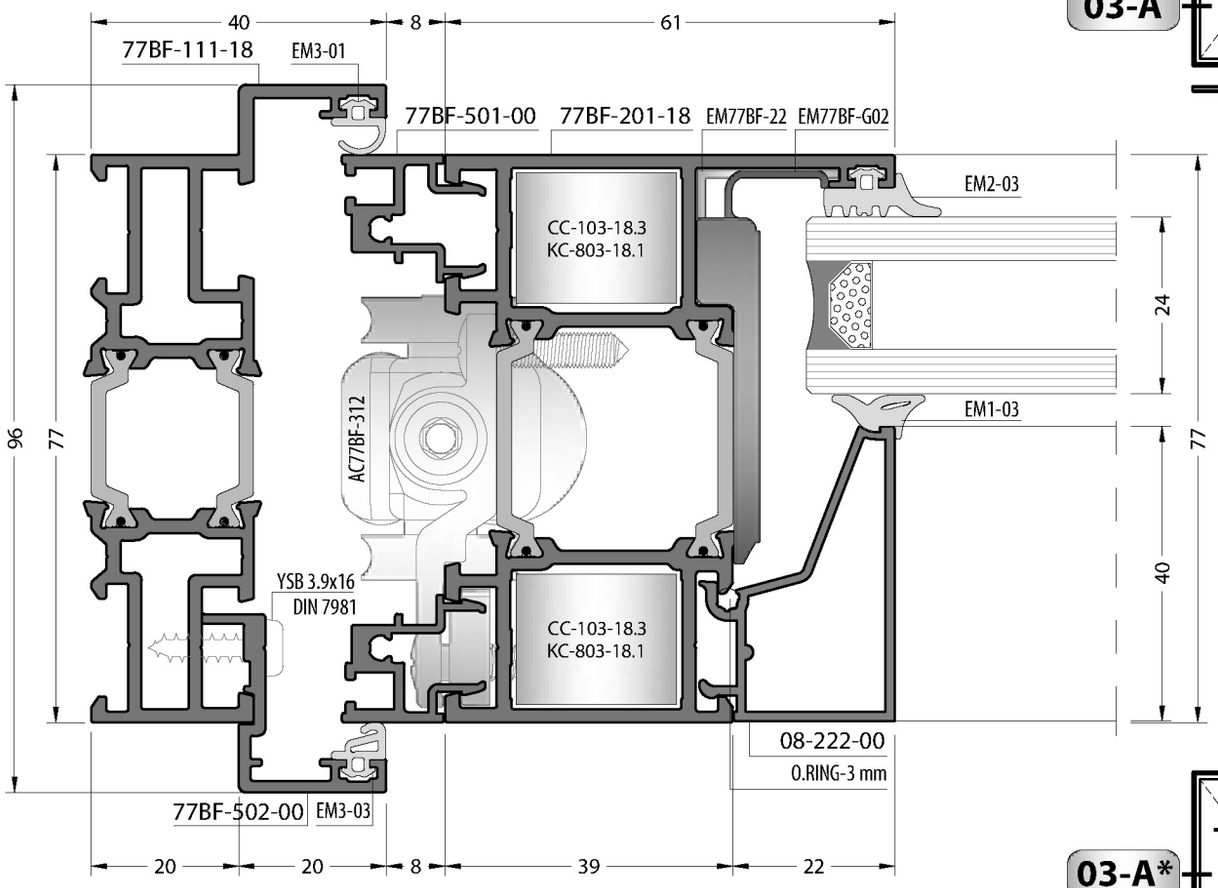

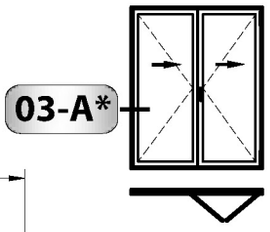

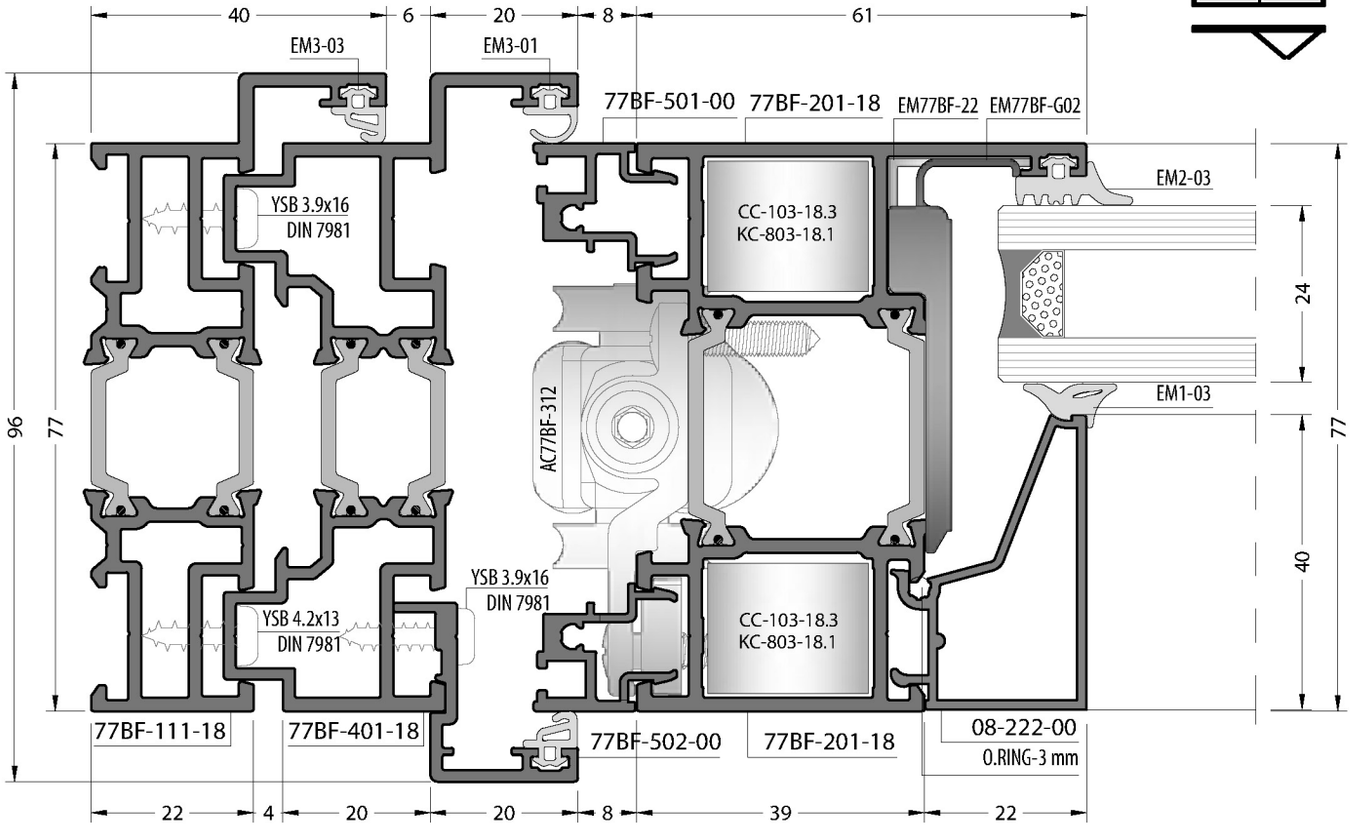

IMPORTANT!..
Always EM77BF-01 on the left sash, EM77BF-02 on the right sash!..
ÖNEMLİ : Her zaman soldaki kanatta EM77BF-01, sağdaki kanatta EM77BF-02 olmalıdır!..

04-A

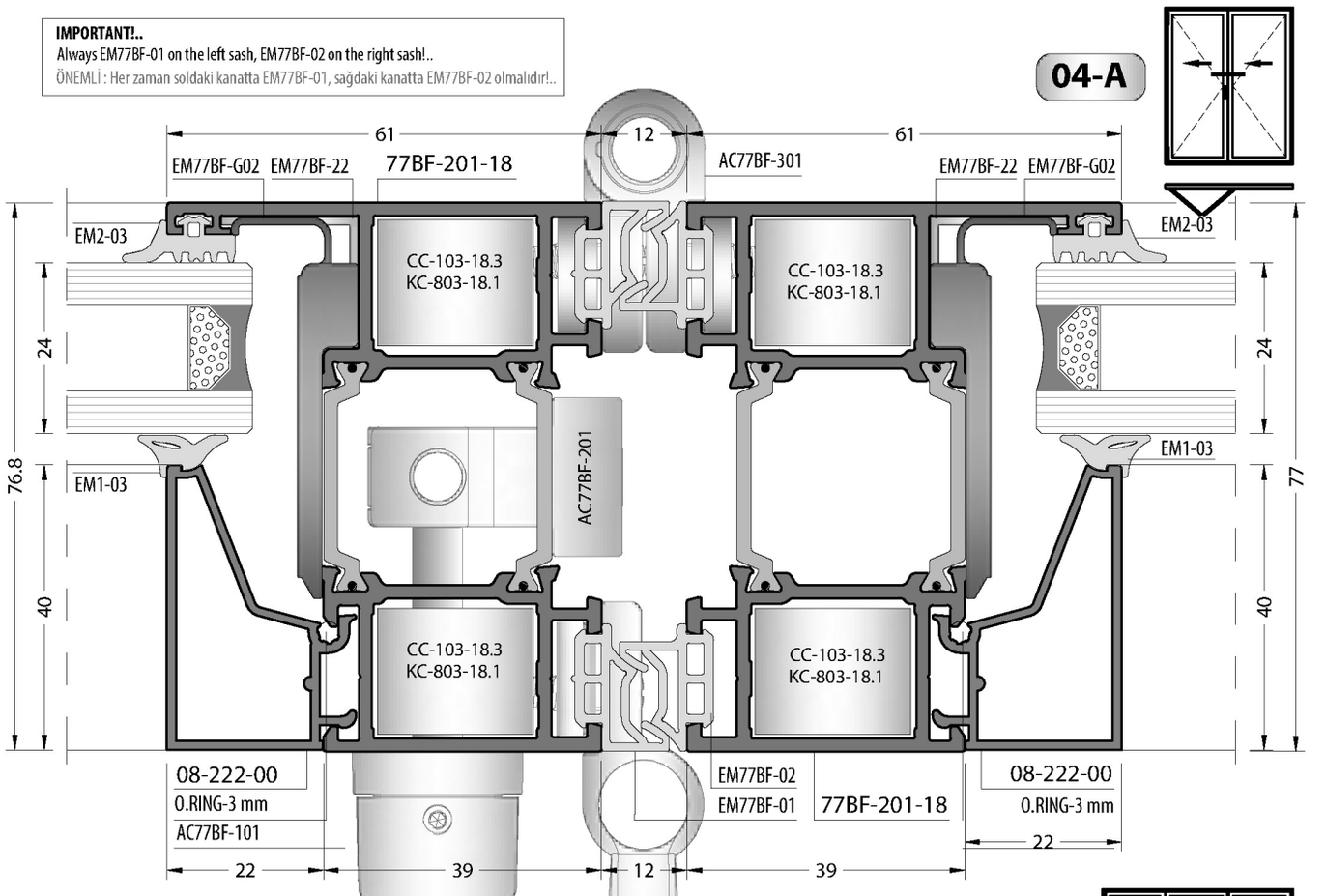

IMPORTANT!..
Always EM77BF-01 on the left sash, EM77BF-02 on the right sash!..
ÖNEMLİ : Her zaman soldaki kanatta EM77BF-01, sağdaki kanatta EM77BF-02 olmalıdır!..

05-A

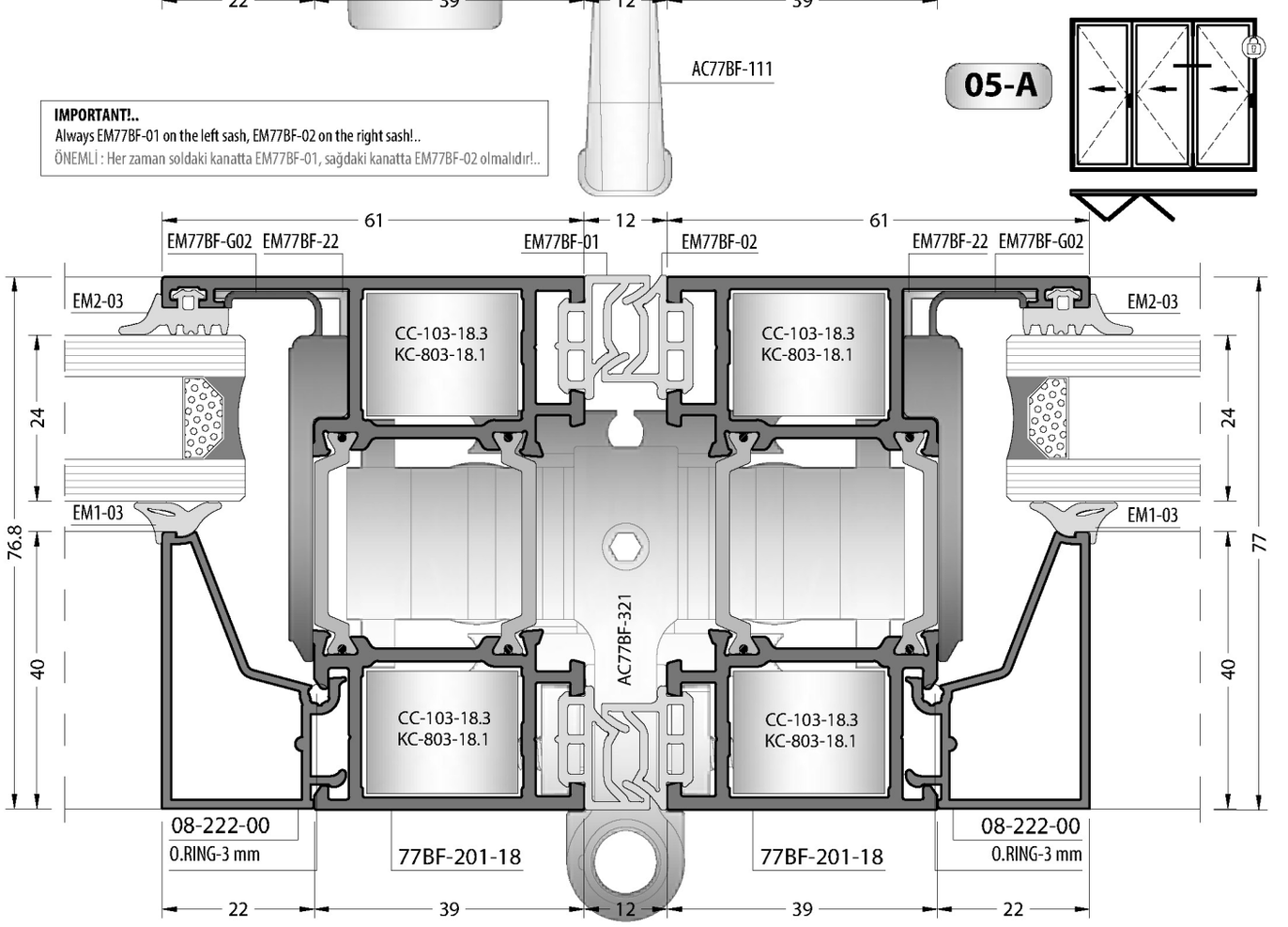

06-A1

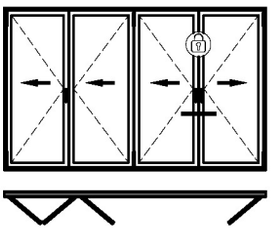

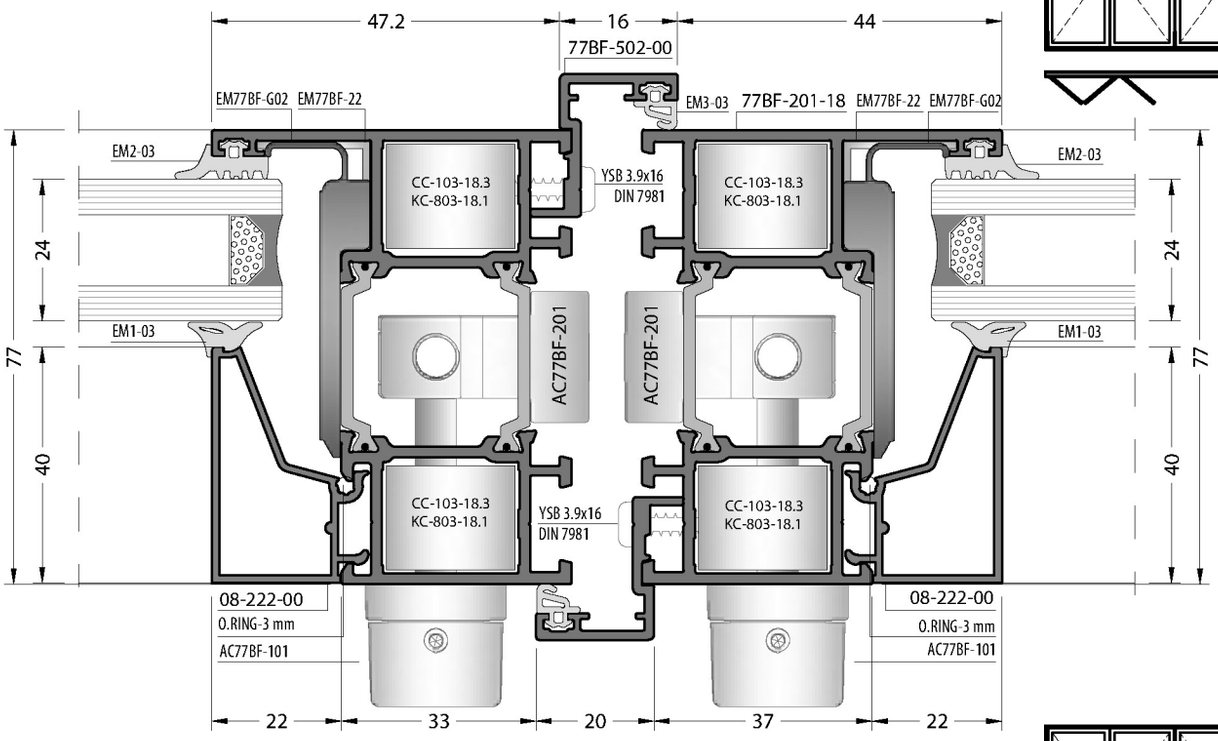

06-A2

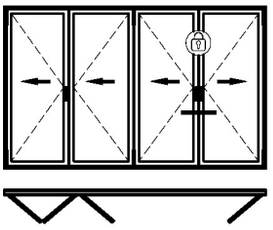

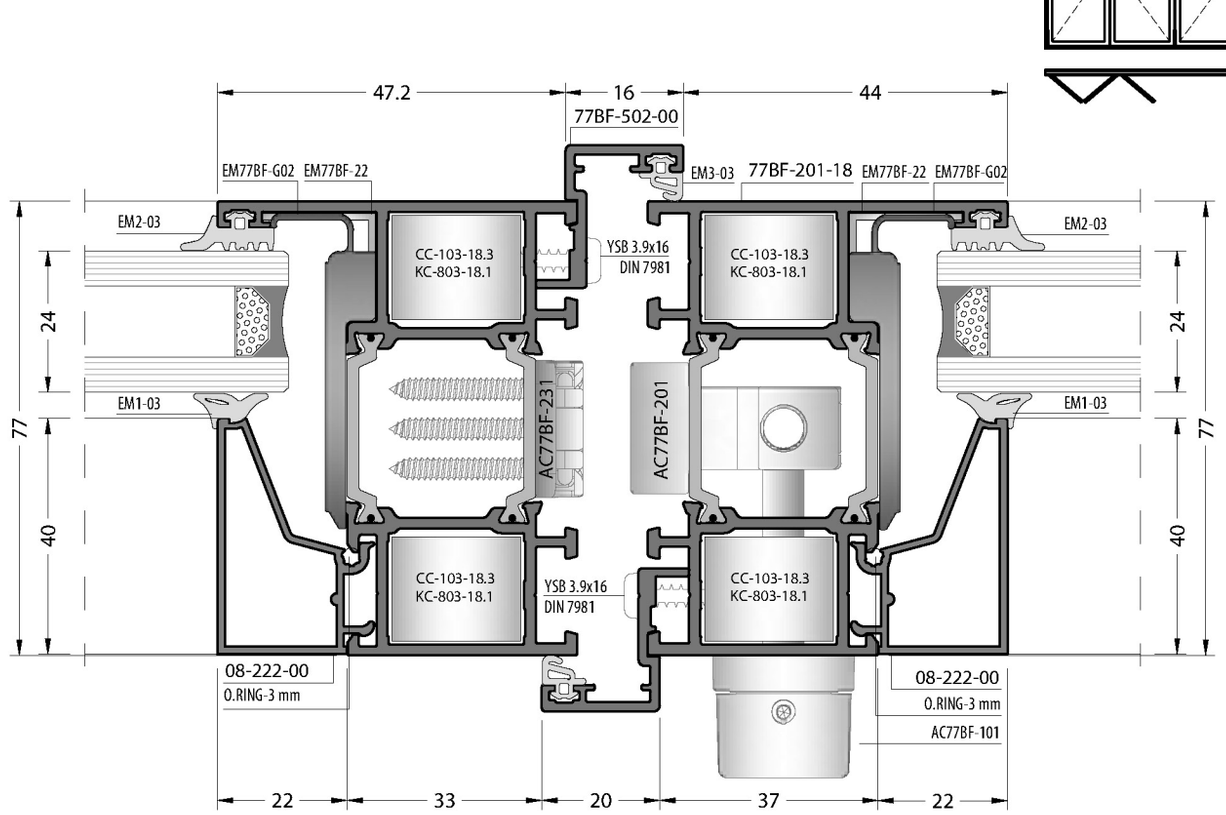

Not scaled / Ölçeksizdir

06-B1

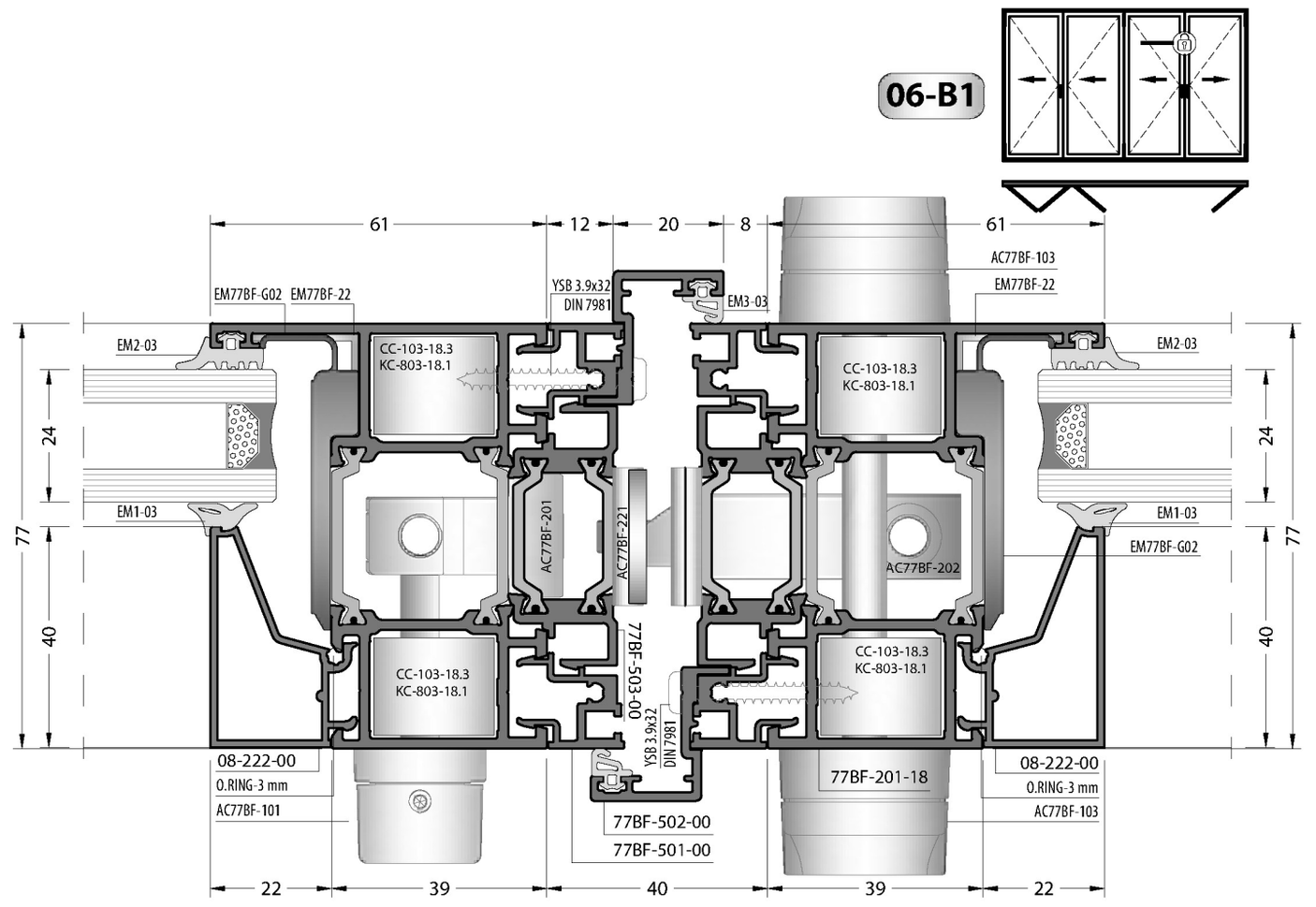

06-B2

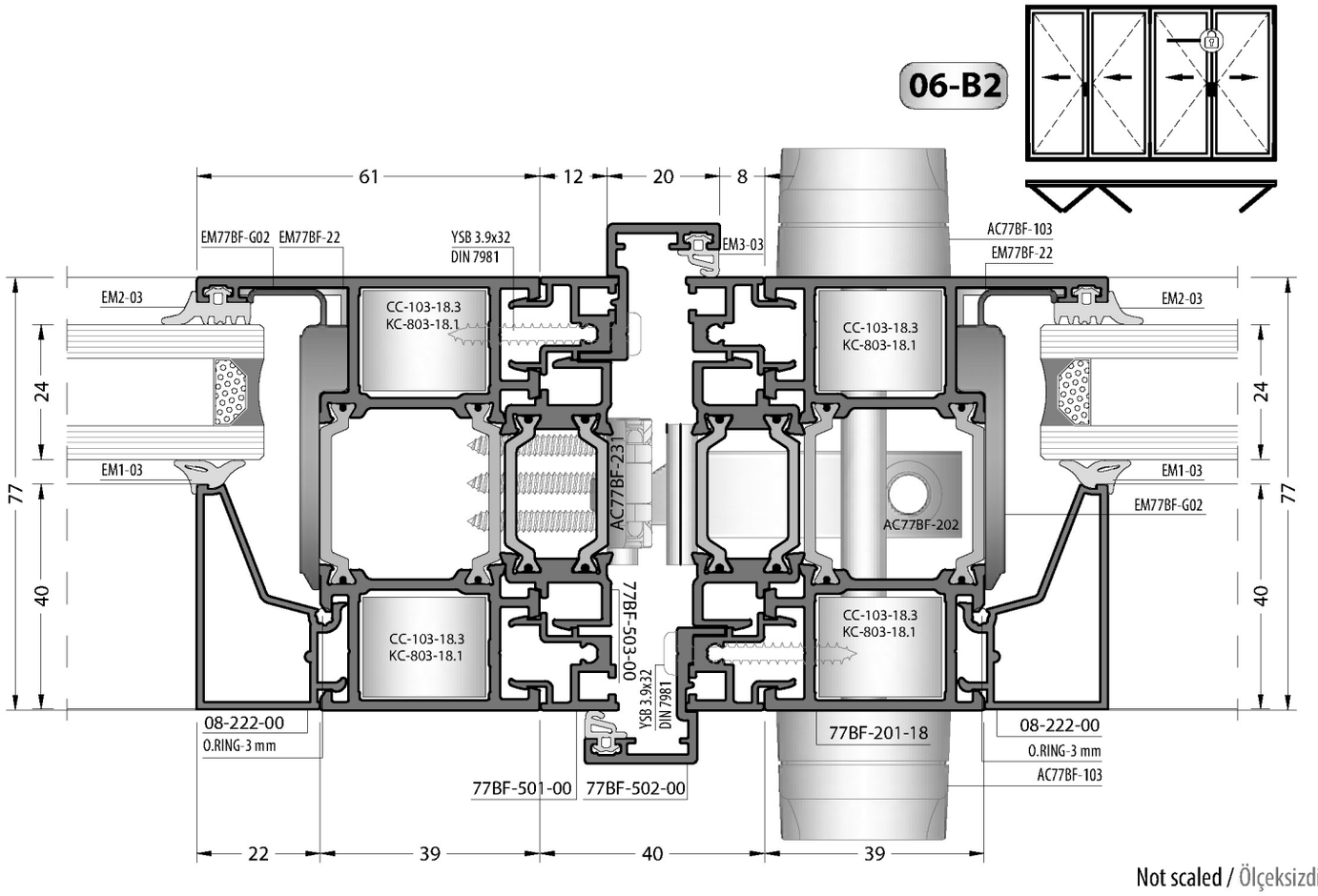

Not scaled / Ölçeksizdir

06-C1

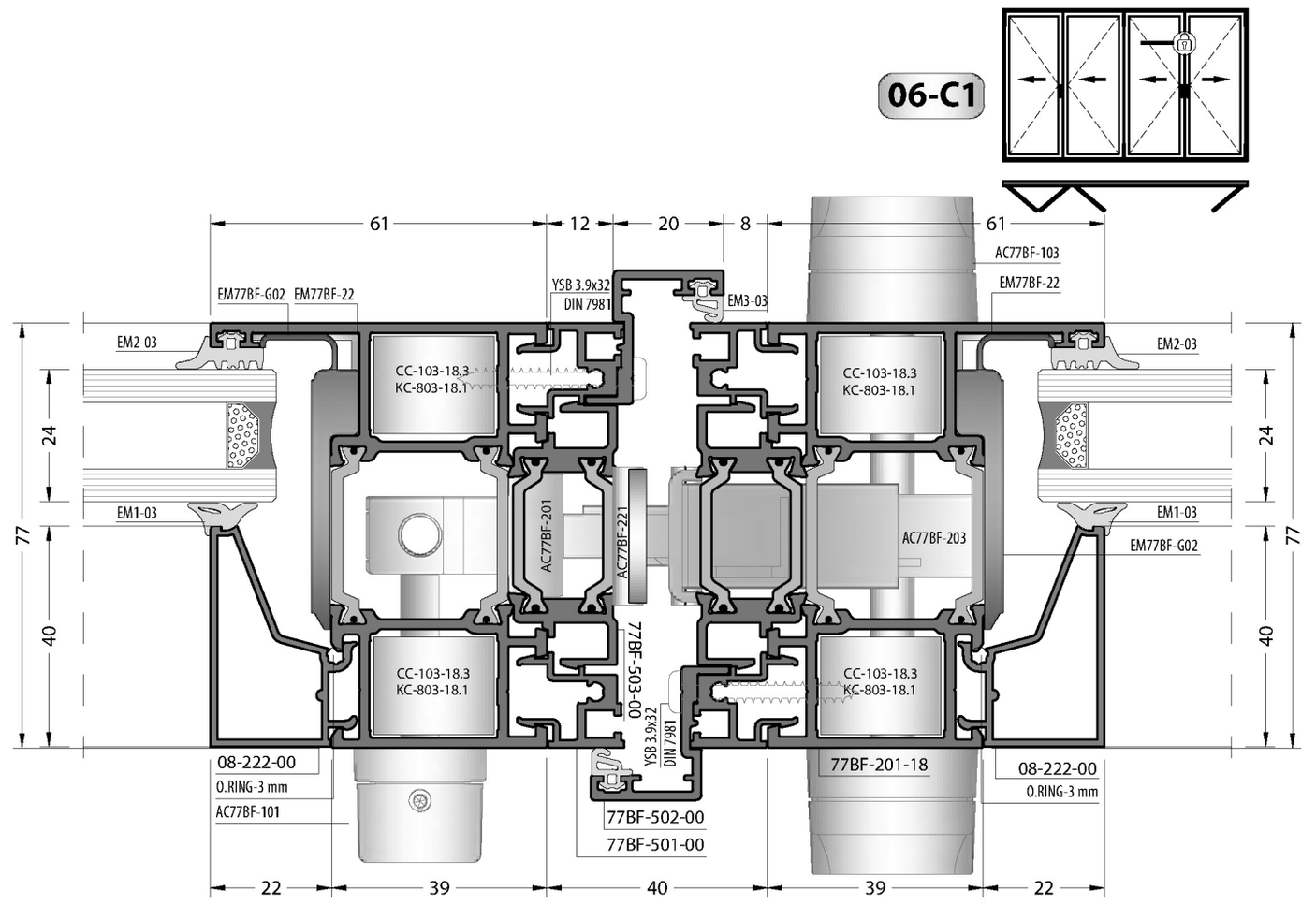

06-C2

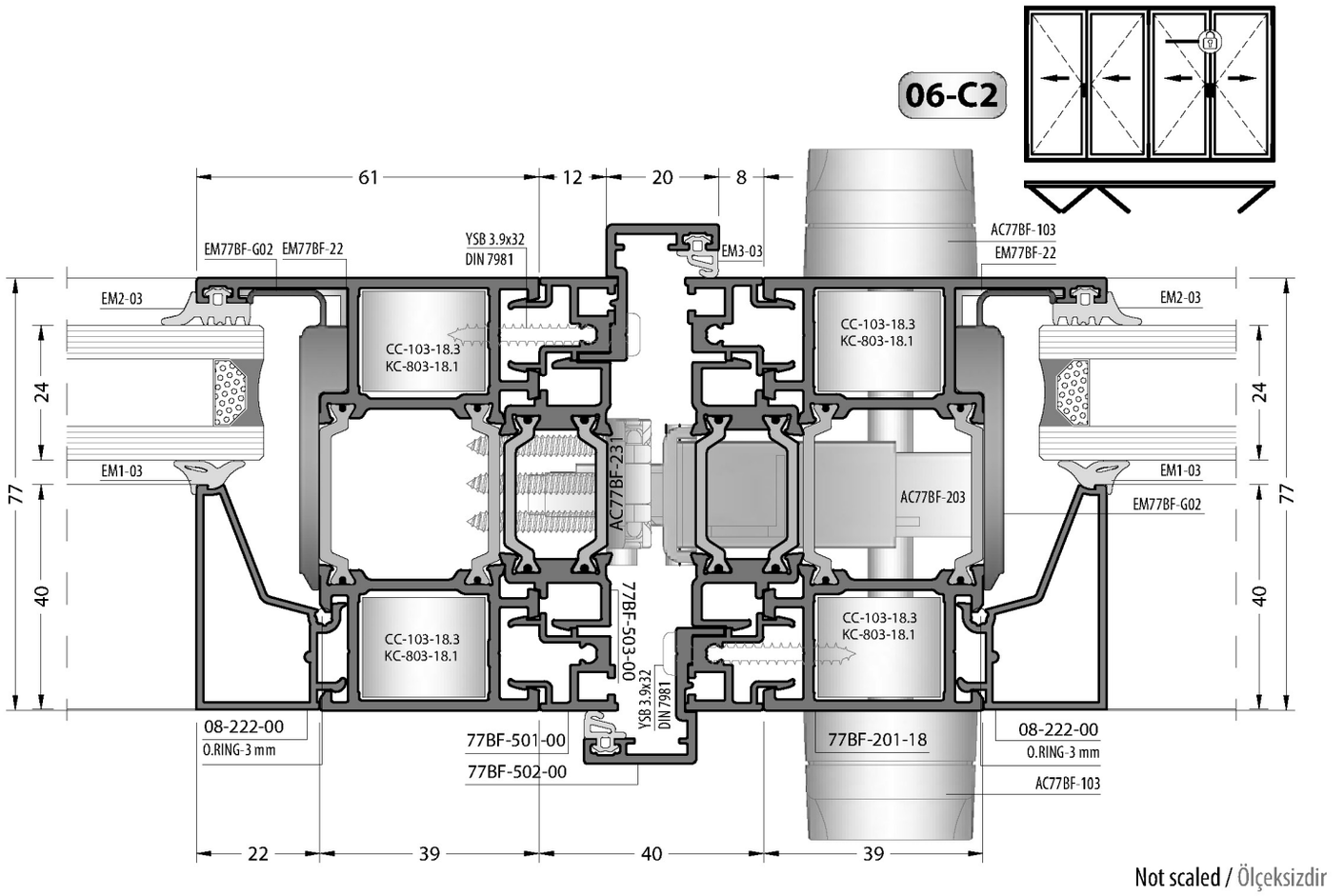

Not scaled / Ölçeksizdir

07-A

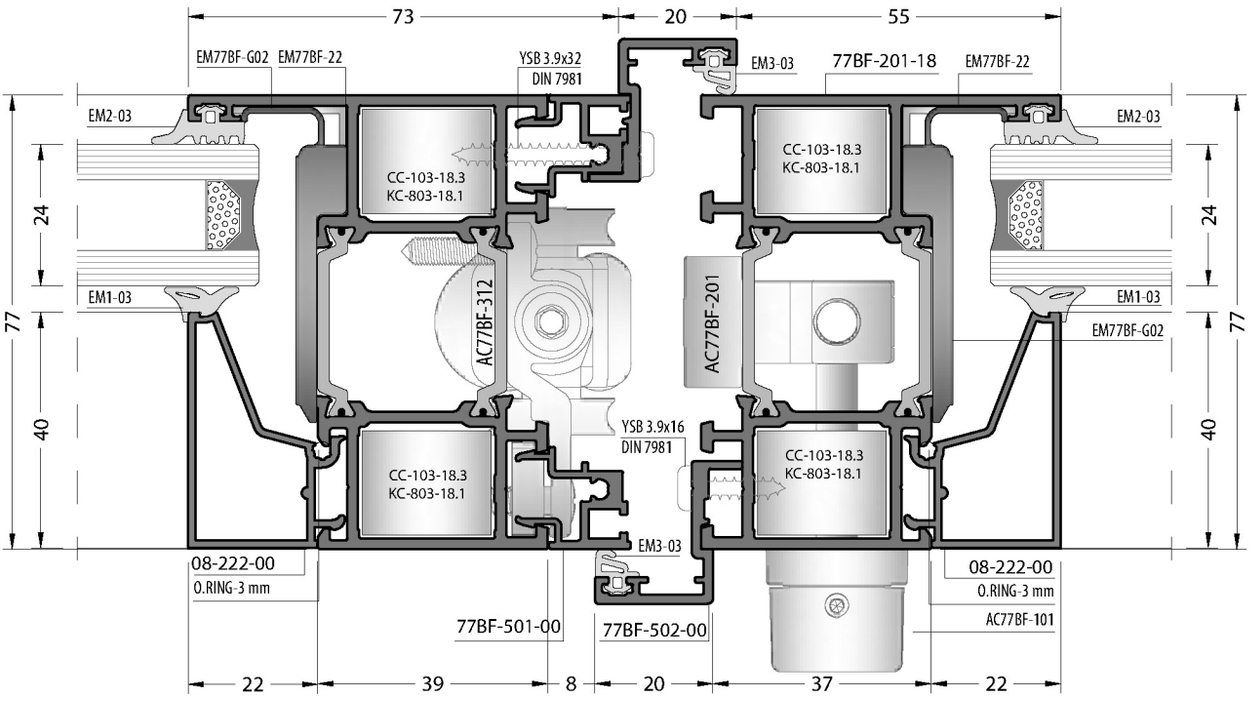

Not scaled / Ölçeksizdir

07-B

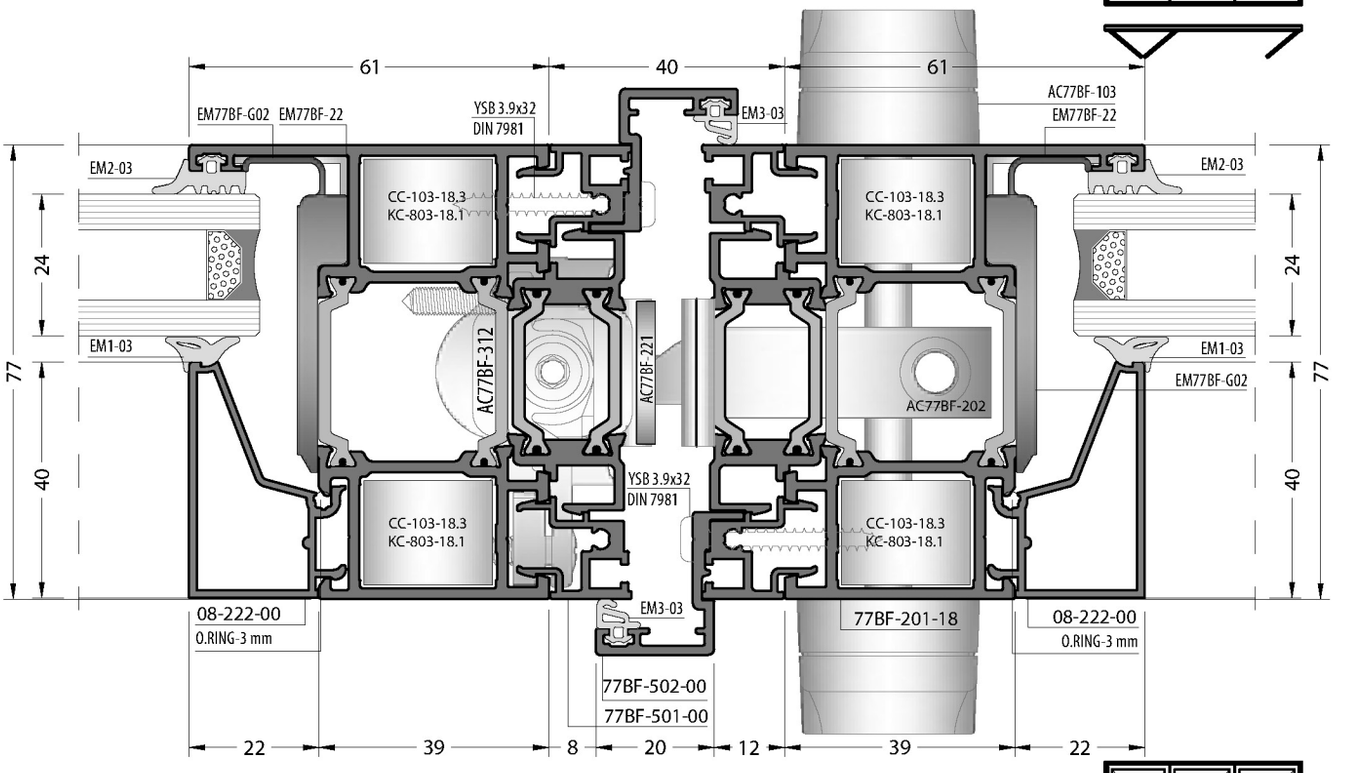

07-C

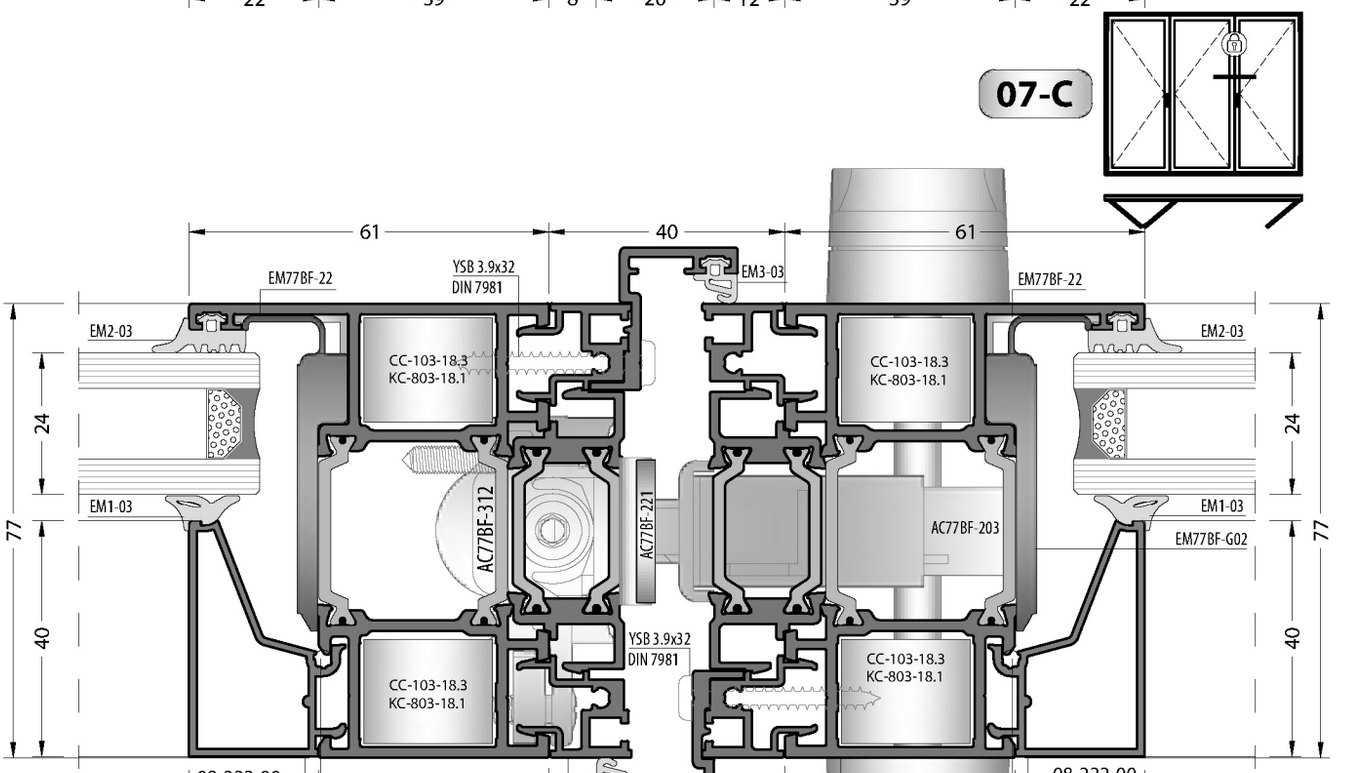

Not scaled / Ölçeksizdir

08-A

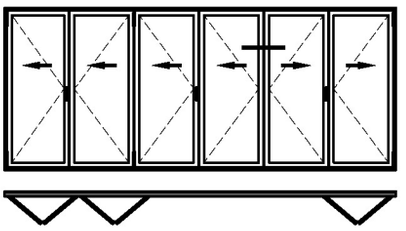

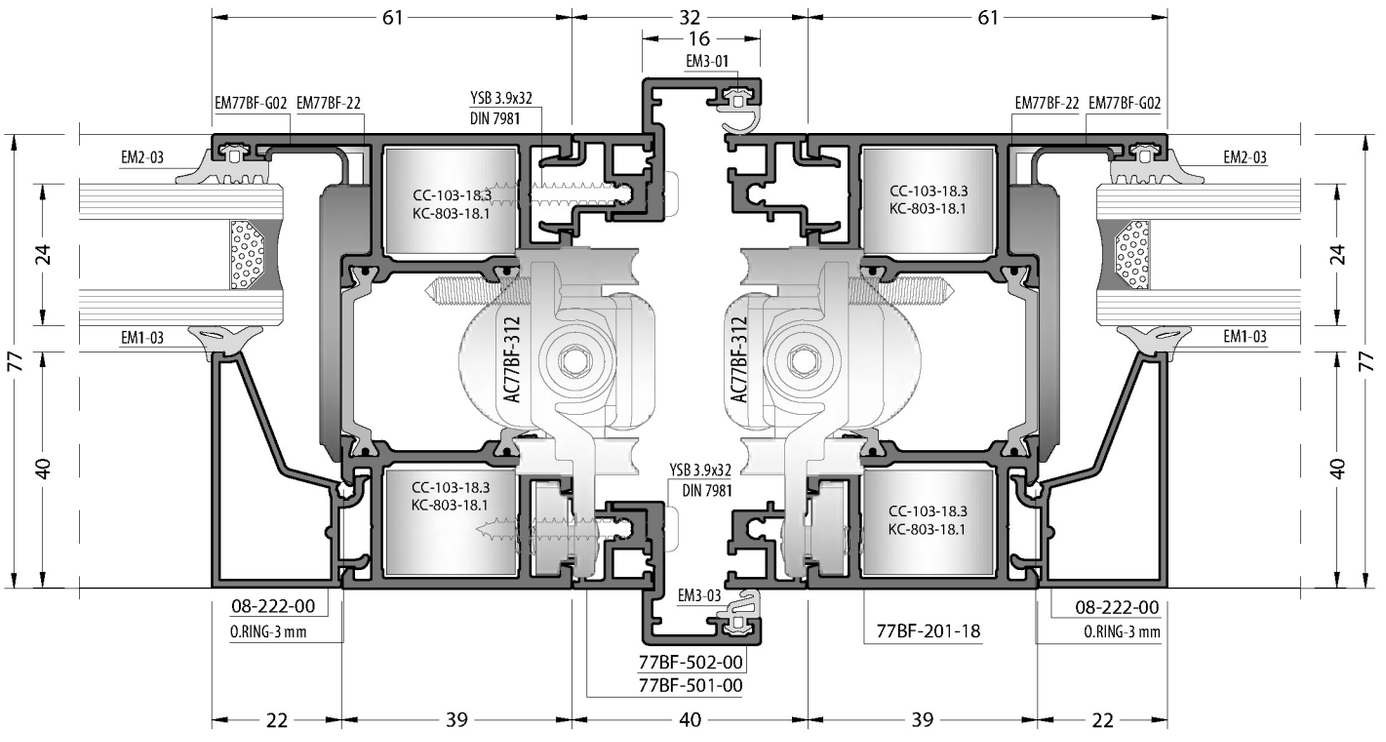

Not scaled / Ölçeksizdir

09-A

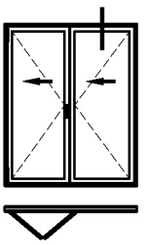

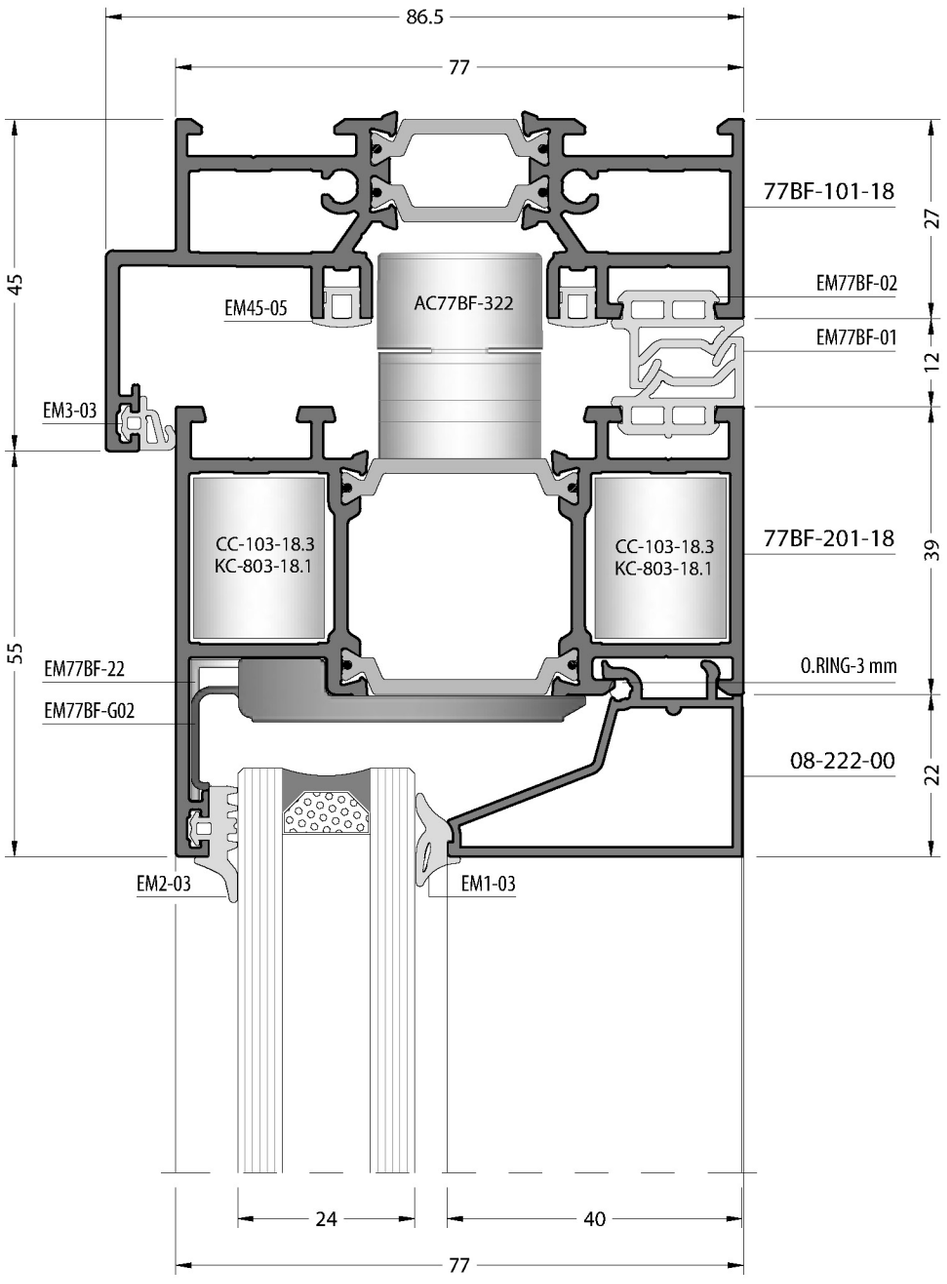
86.5
77
77BF-101-18
27
EM77BF-02
EM45-05
AC77BF-322
EM77BF-01
12
45
EM3-03
CC-103-18.3
KC-803-18.1
CC-103-18.3
KC-803-18.1
77BF-201-18
39
55
EM77BF-22
O.RING-3 mm
EM77BF-G02
08-222-00
22
EM2-03
EM1-03
24
40
77

10-A

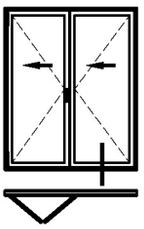

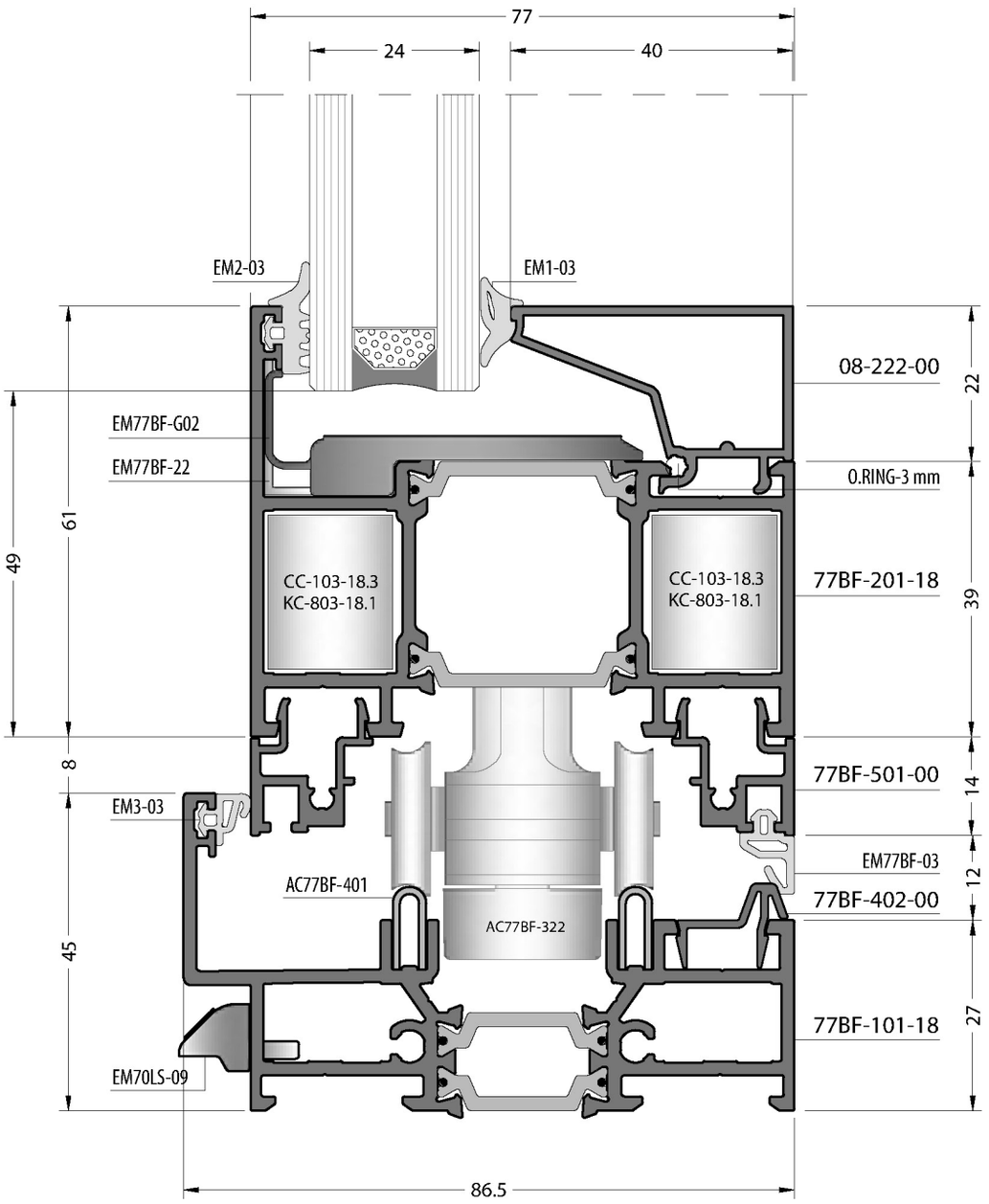
77
24
40
EM2-03
EM1-03
08-222-00
22
EM77BF-G02
EM77BF-22
O.RING-3 mm
61
49
CC-103-18.3
KC-803-18.1
CC-103-18.3
KC-803-18.1
77BF-201-18
39
8
77BF-501-00
14
EM3-03
EM77BF-03
12
AC77BF-401
77BF-402-00
AC77BF-322
45
77BF-101-18
27
EM70LS-09
86.5

10-B

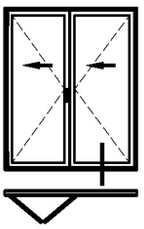

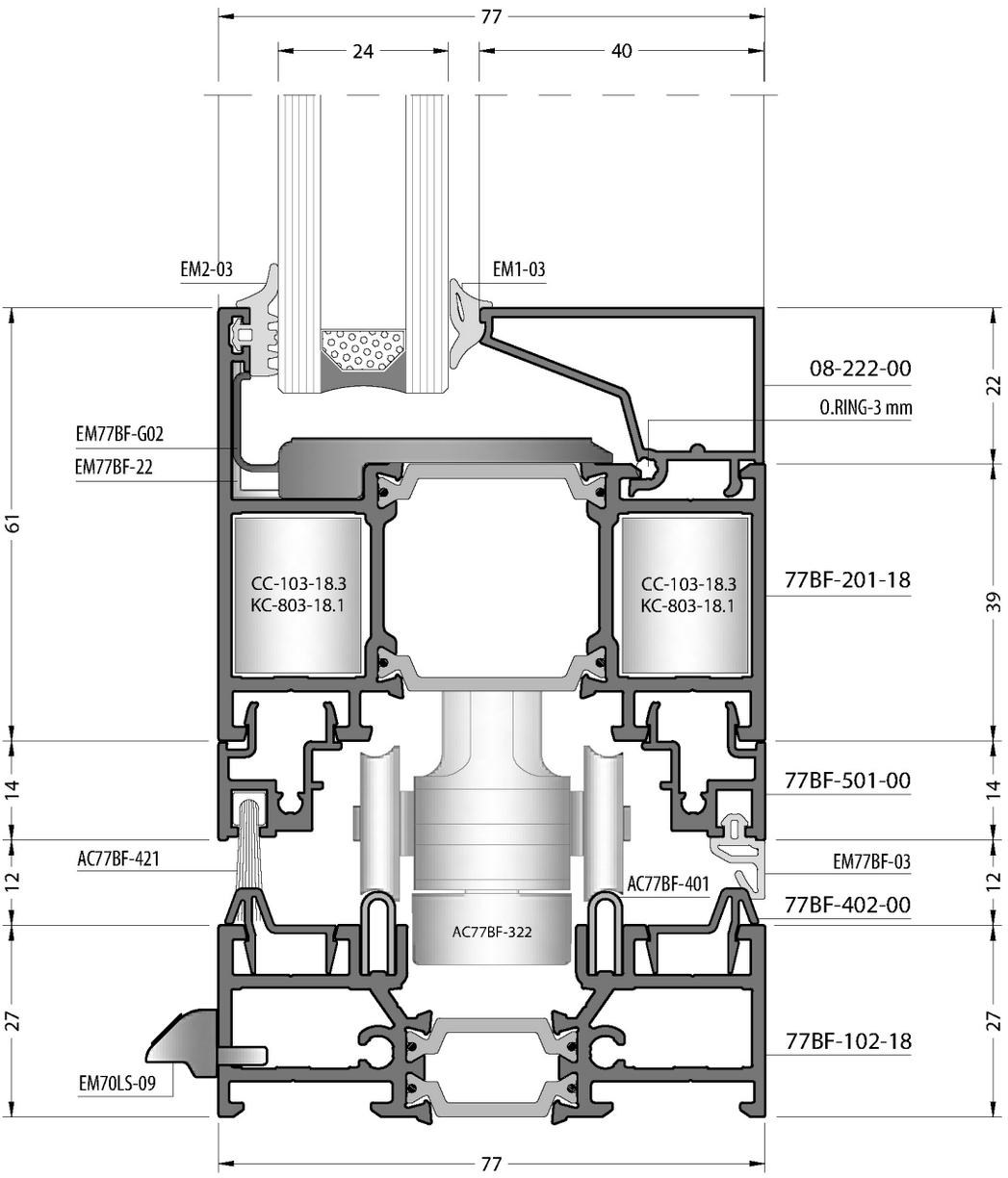
77
24
40
EM2-03
EM1-03
08-222-00
O.RING-3 mm
EM77BF-G02
EM77BF-22
CC-103-18.3
KC-803-18.1
CC-103-18.3
KC-803-18.1
77BF-201-18
77BF-501-00
AC77BF-421
EM77BF-03
AC77BF-401
77BF-402-00
AC77BF-322
77BF-102-18
EM70LS-09
61
14
12
27
22
39
14
12
27
77

10-C

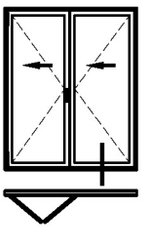

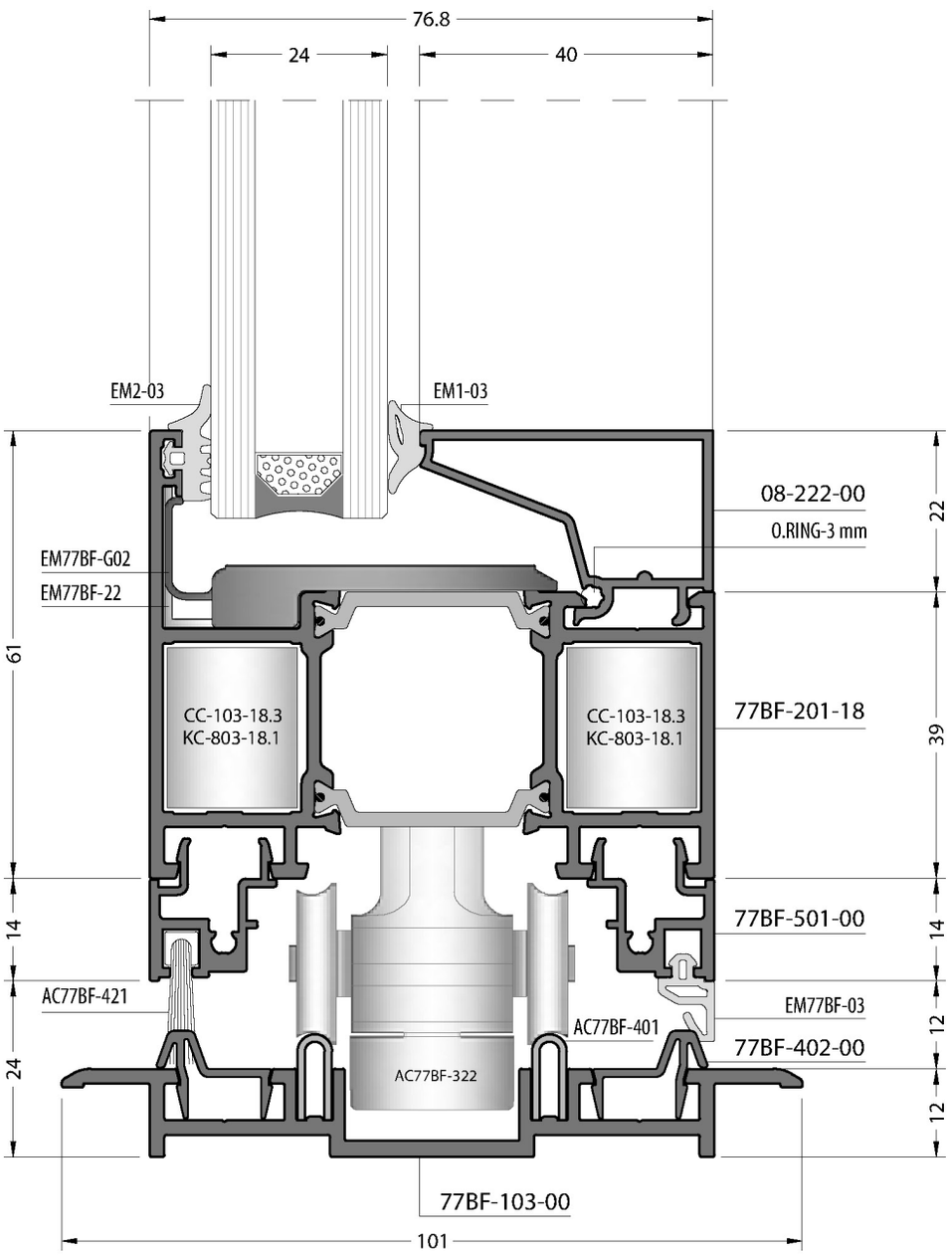
76.8
24
40
EM2-03
EM1-03
08-222-00
O.RING-3 mm
EM77BF-G02
EM77BF-22
CC-103-18.3
KC-803-18.1
CC-103-18.3
KC-803-18.1
77BF-201-18
77BF-501-00
AC77BF-421
EM77BF-03
AC77BF-401
77BF-402-00
AC77BF-322
77BF-103-00
101
61
14
24
22
39
14
12
12

10-D

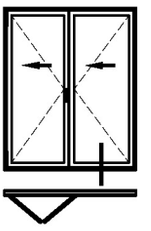

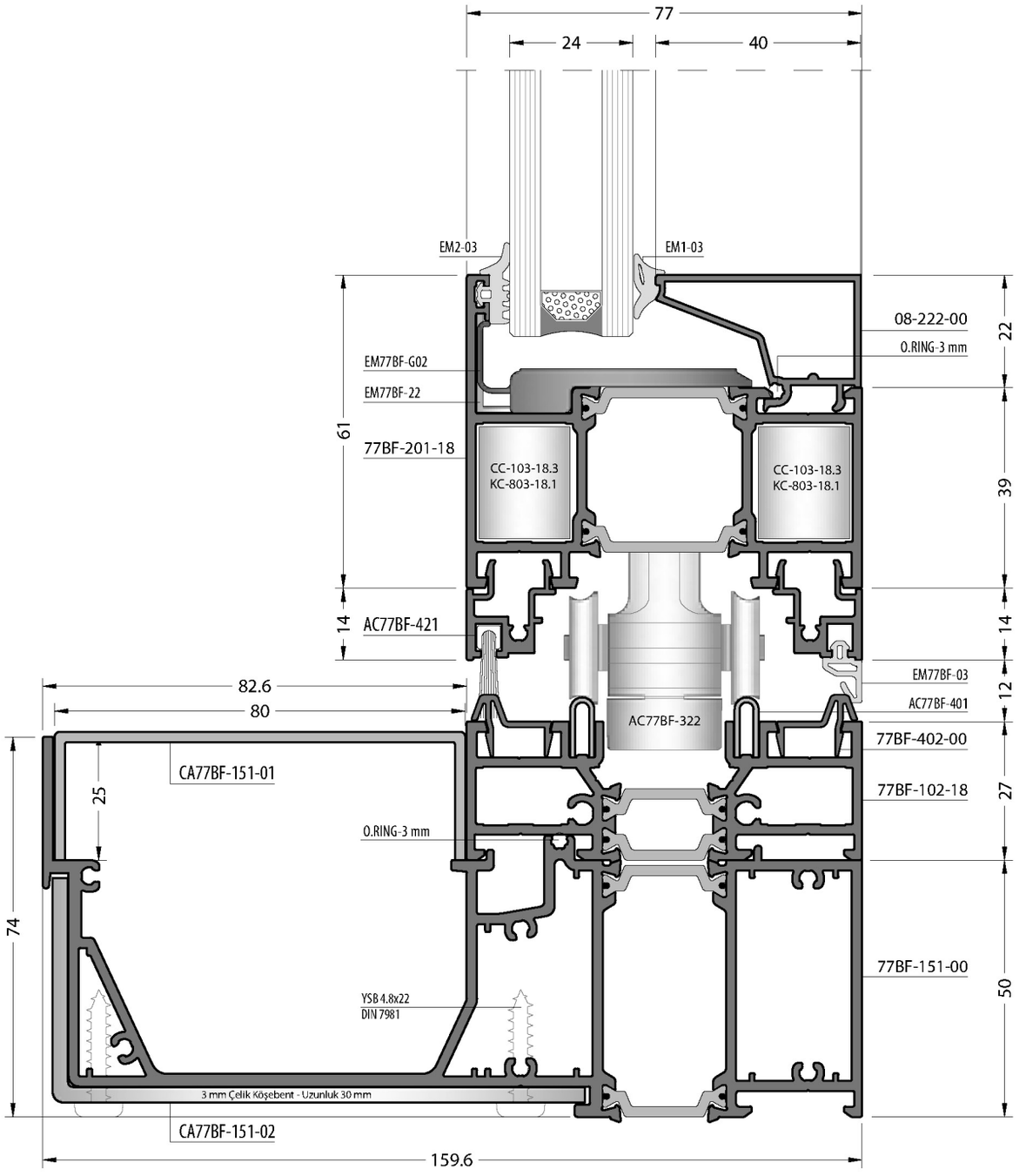

Not scaled / Ölçeksizdir

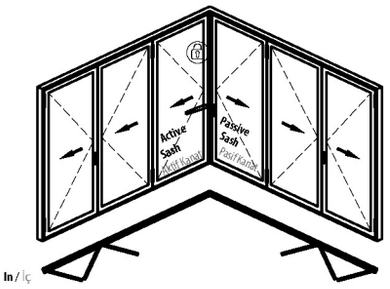

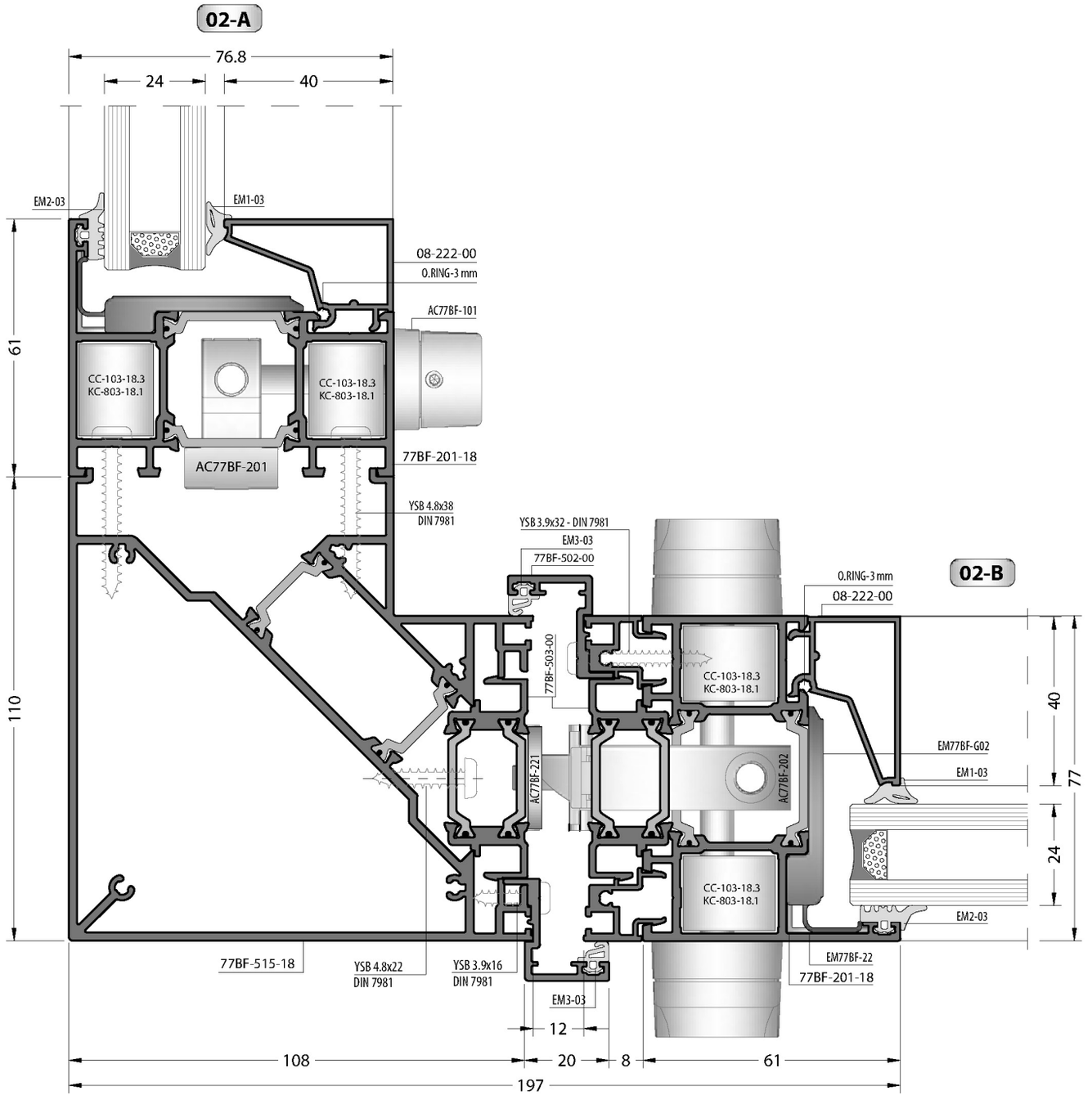

Not scaled / Ölçeksizdir

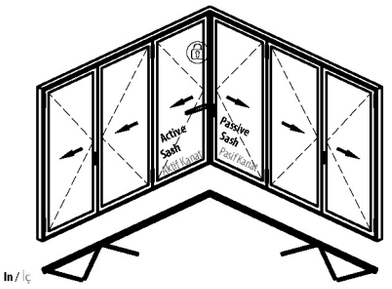

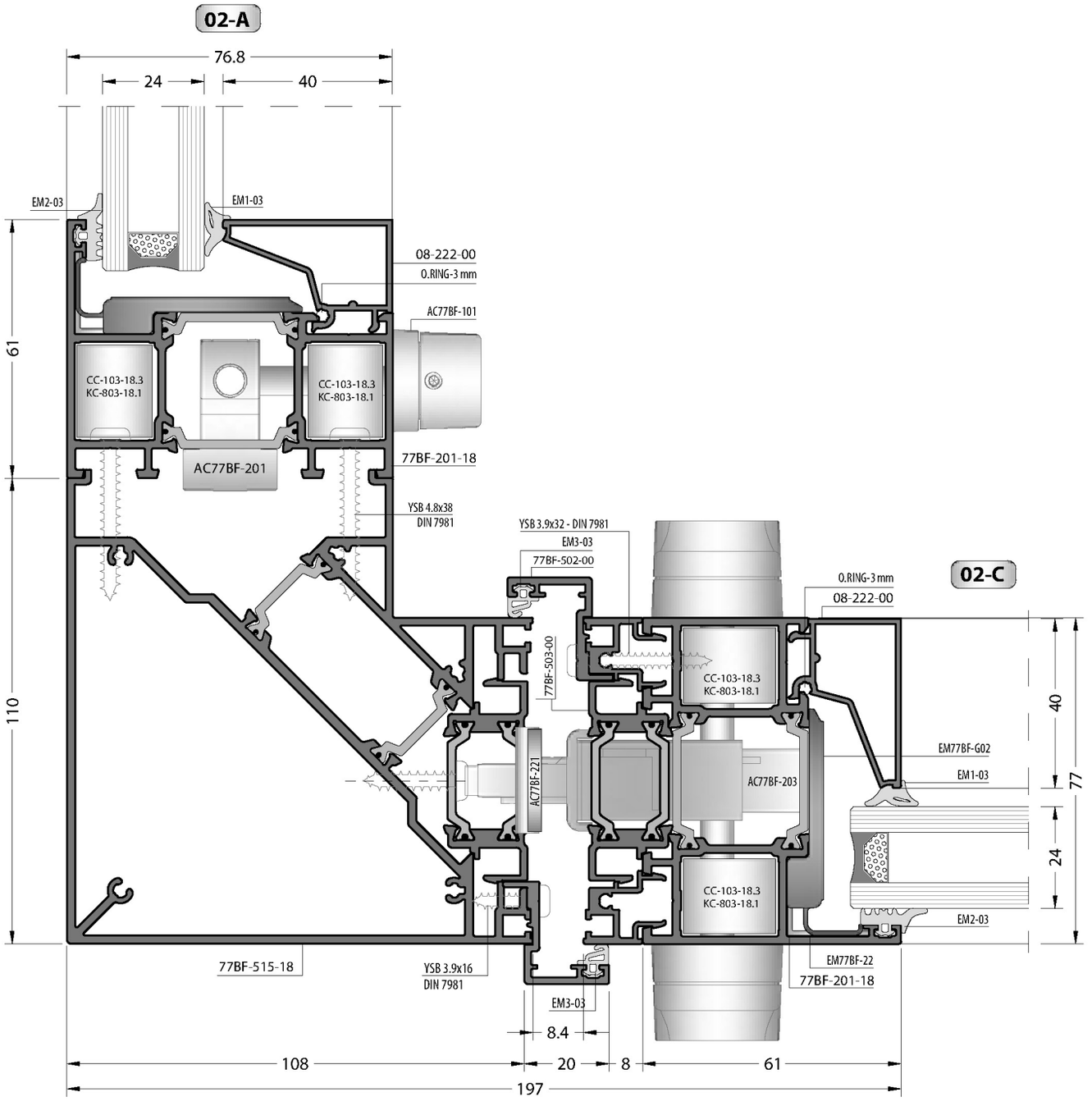

Not scaled / Ölçeksizdir

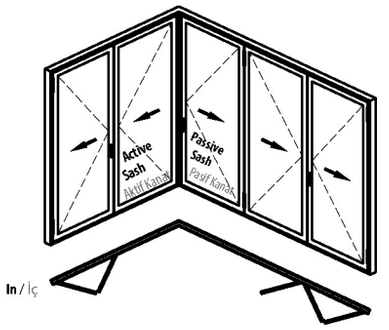

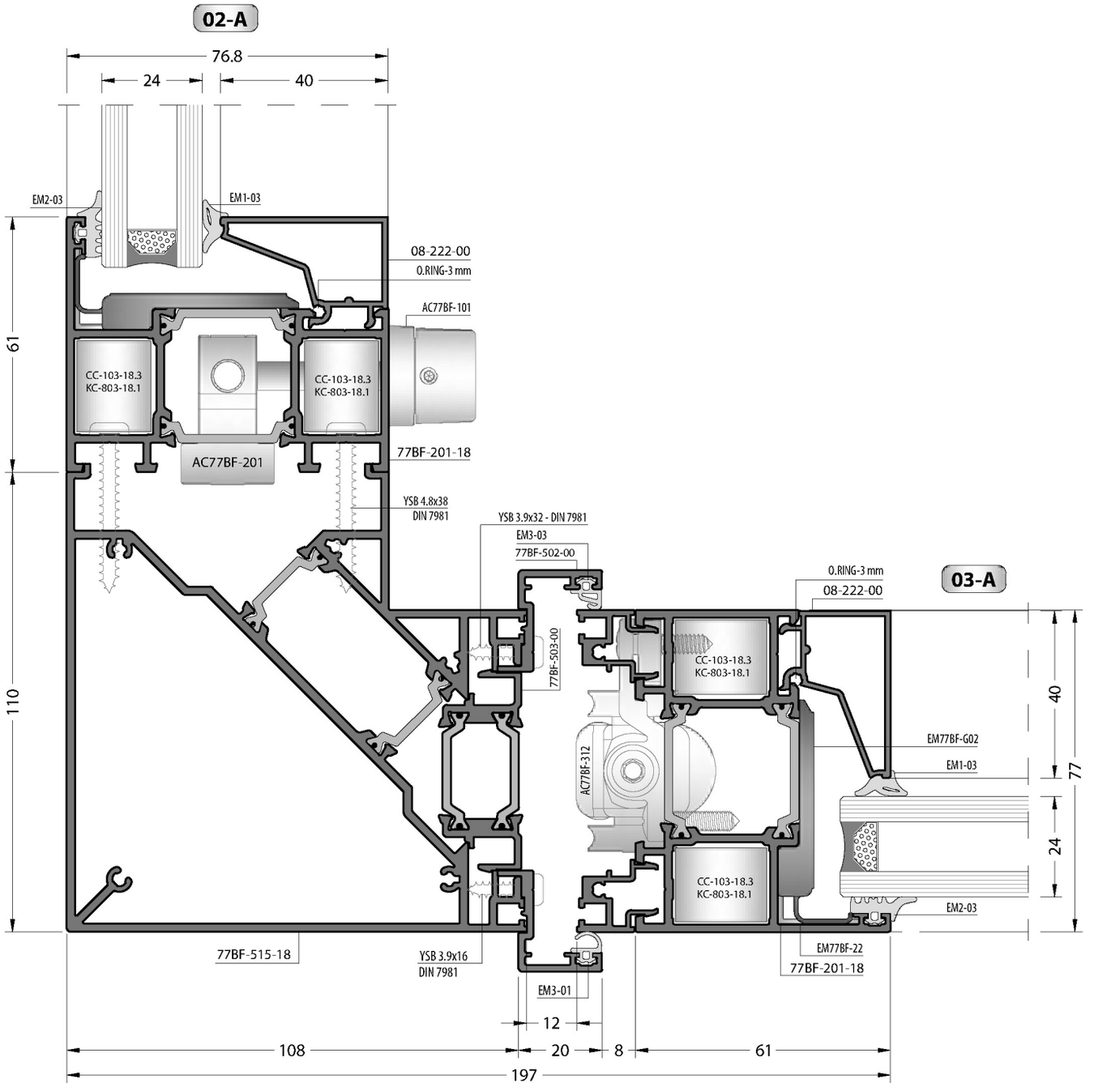

Not scaled / Ölçeksizdir

Frame Connection 90°/ Kasa Birleşim 90°

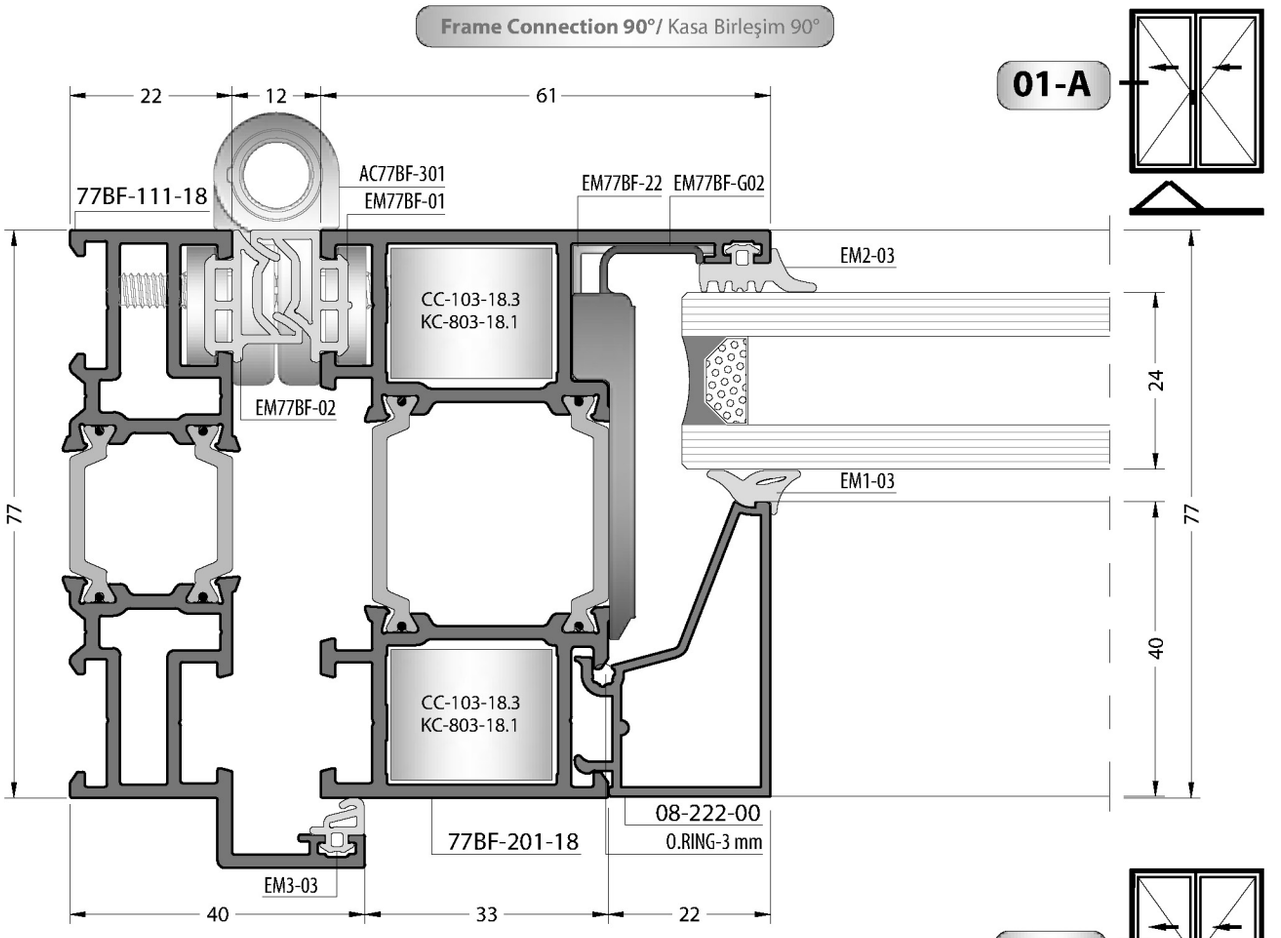

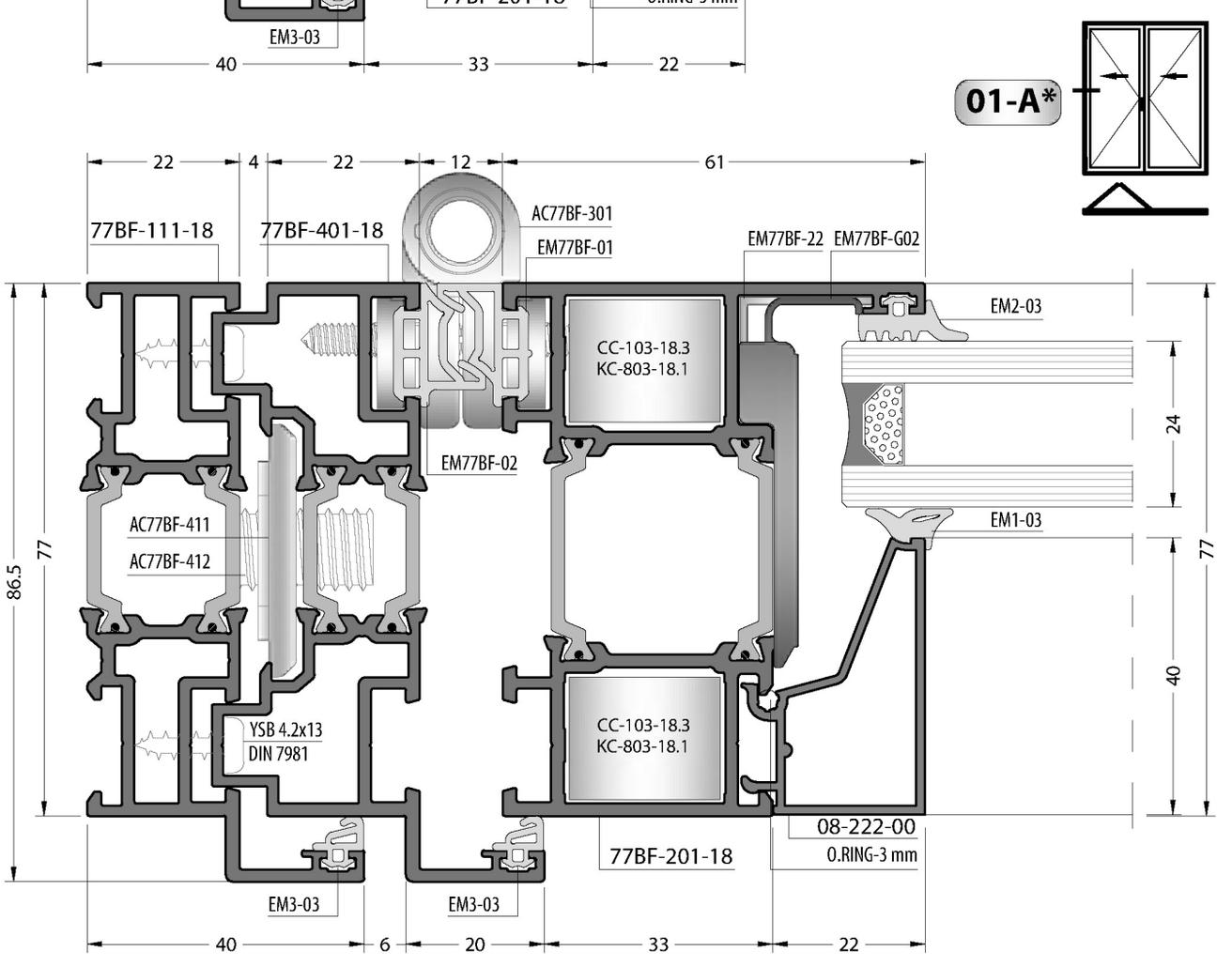

Frame Connection 90°/ Kasa Birleşim 90°

02-A

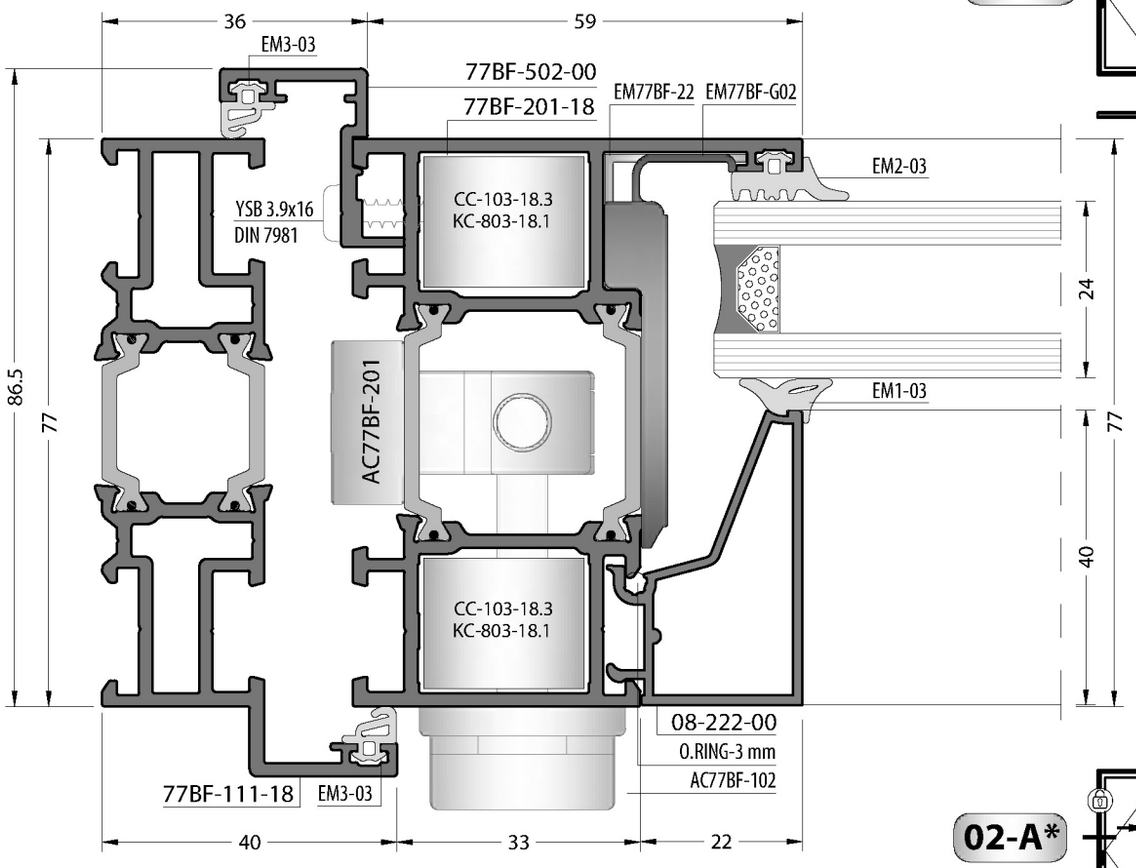

02-A*

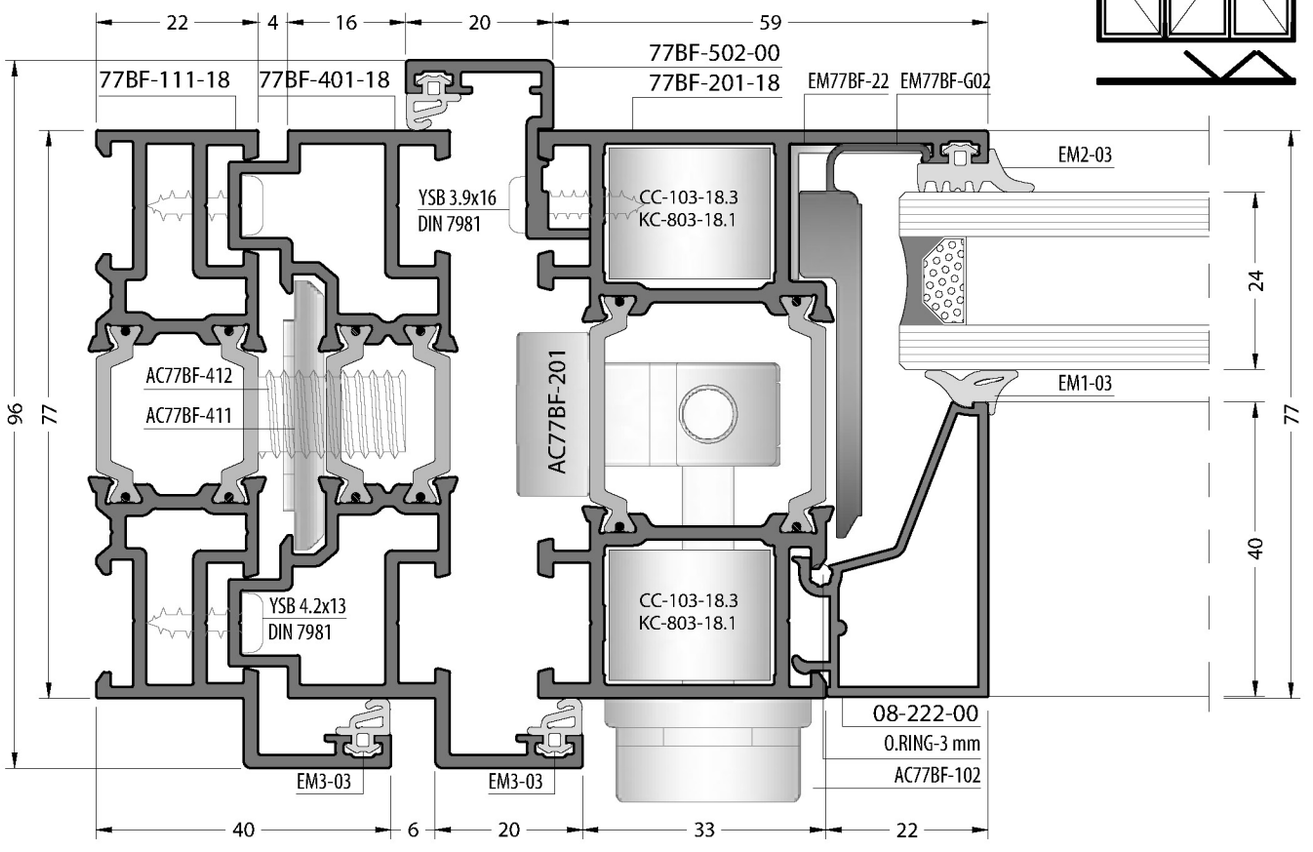

Frame Connection 90°/ Kasa Birleşim 90°

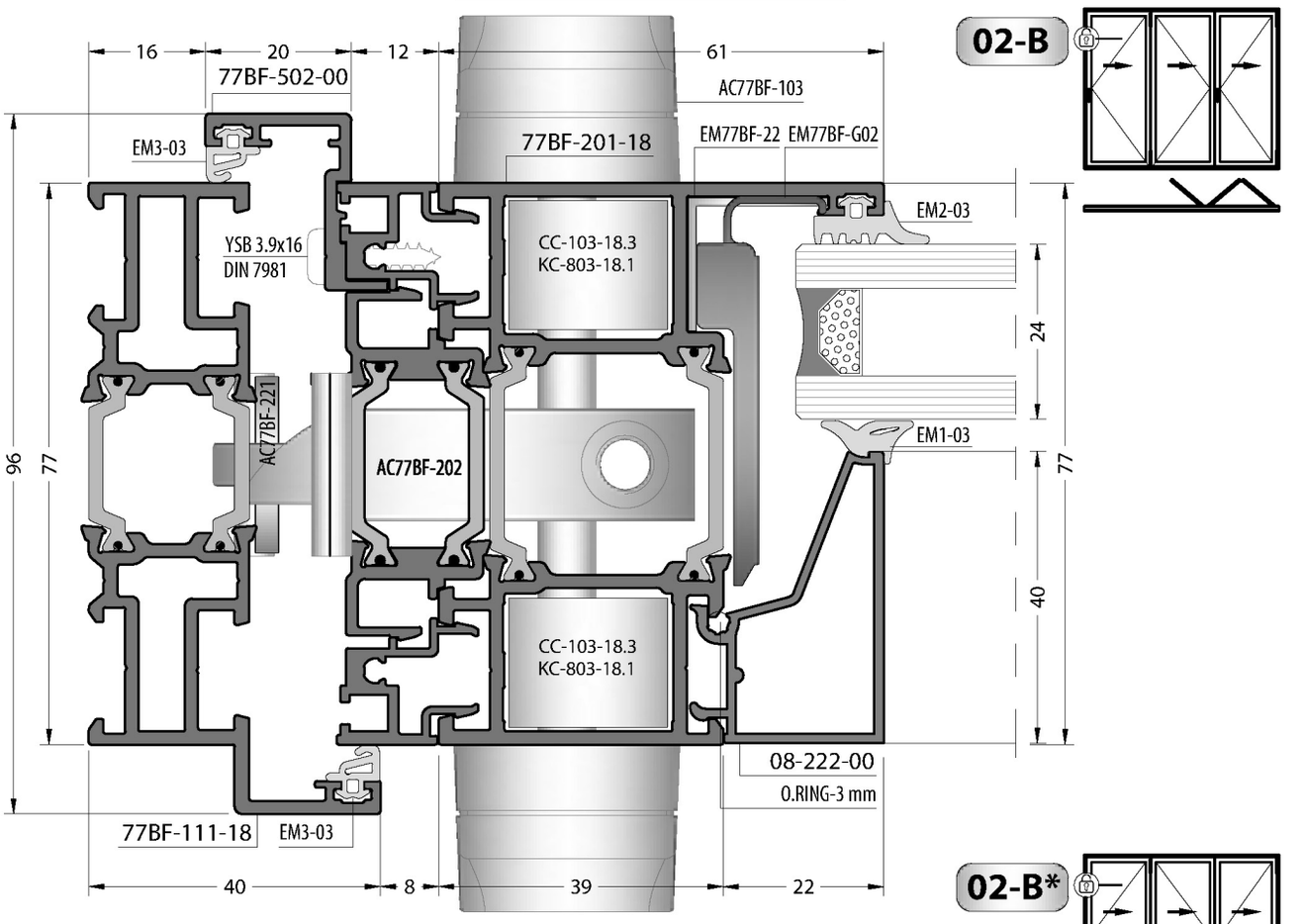

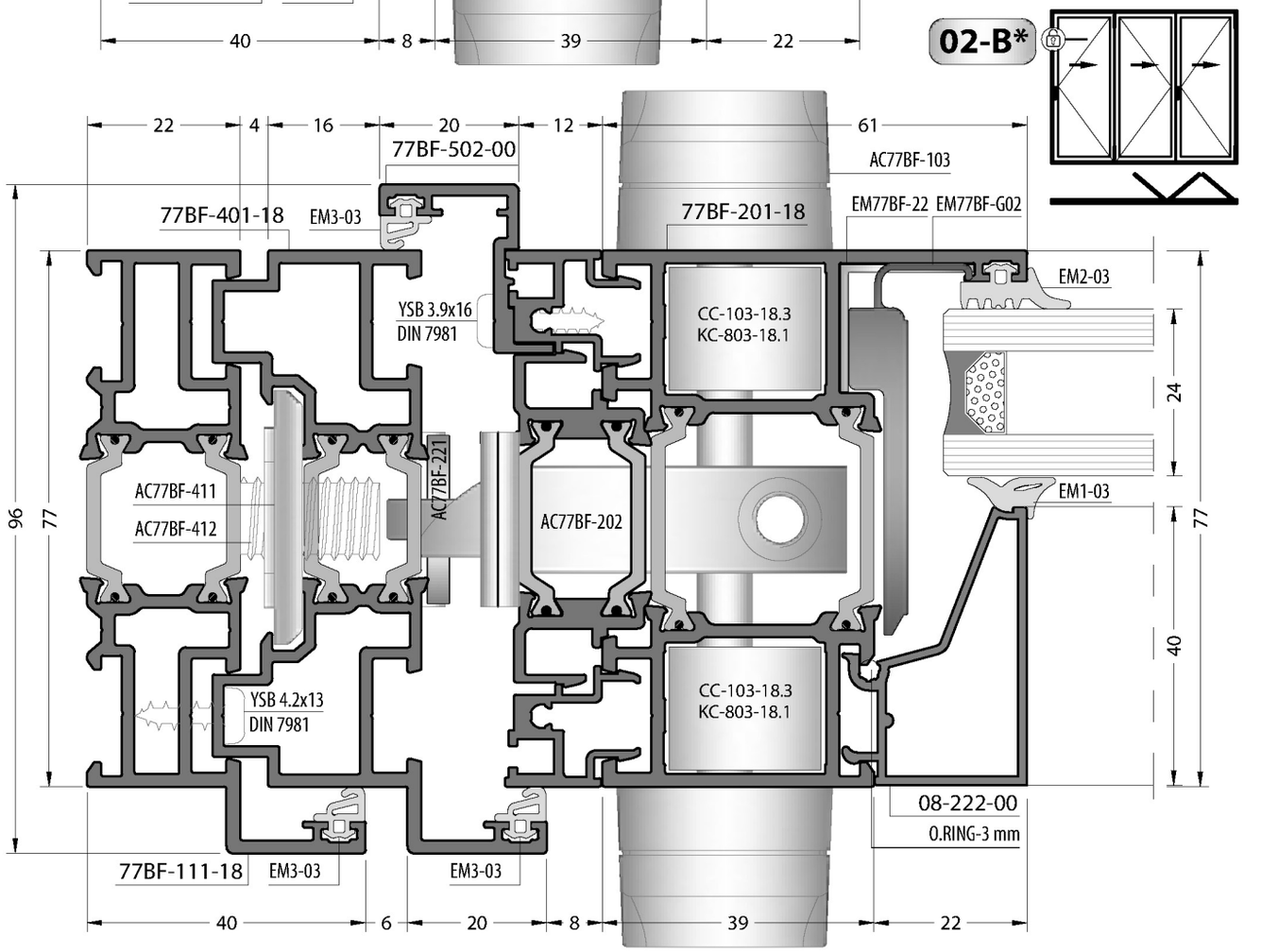

Frame Connection 90°/ Kasa Birleşim 90°

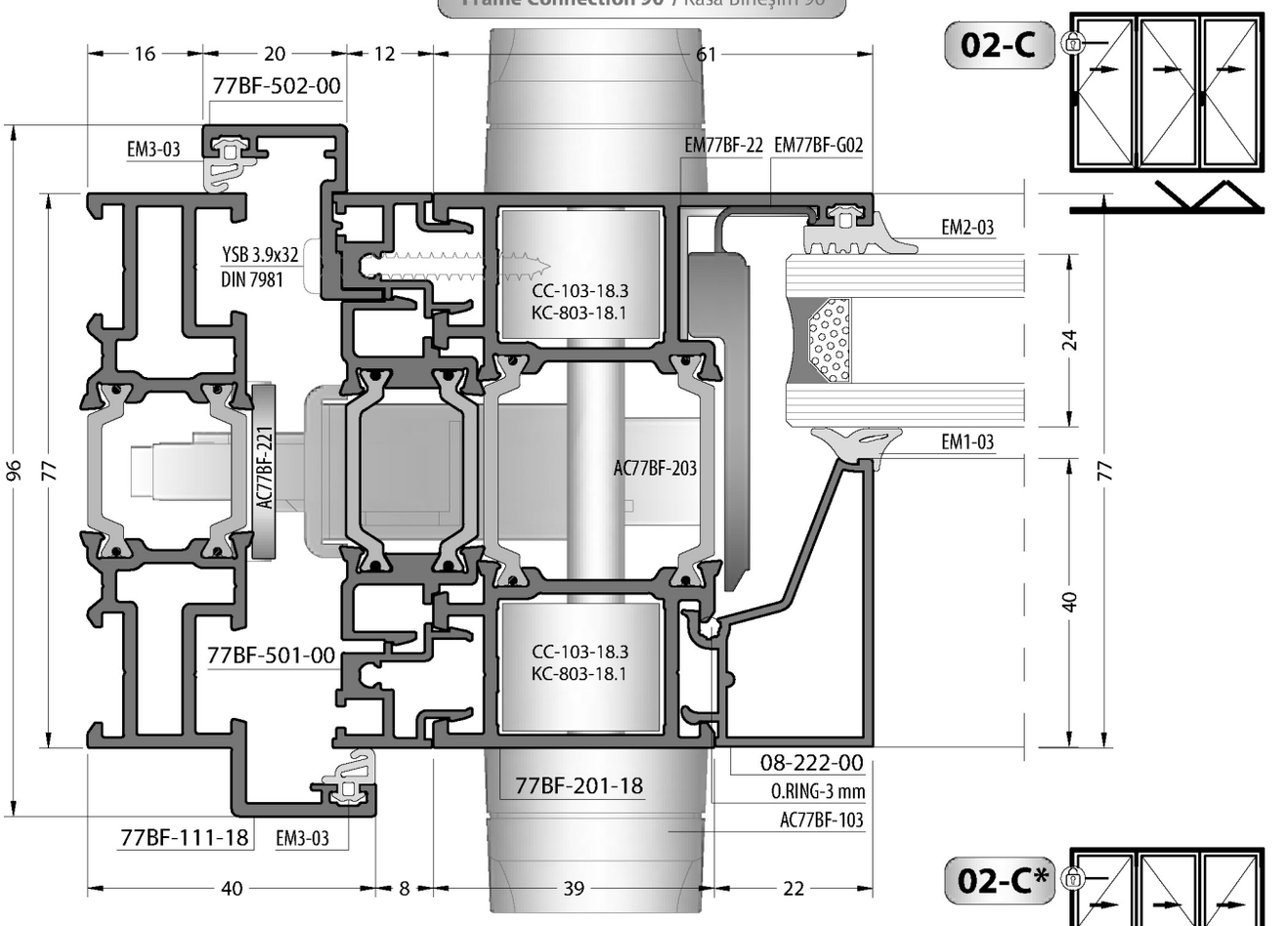

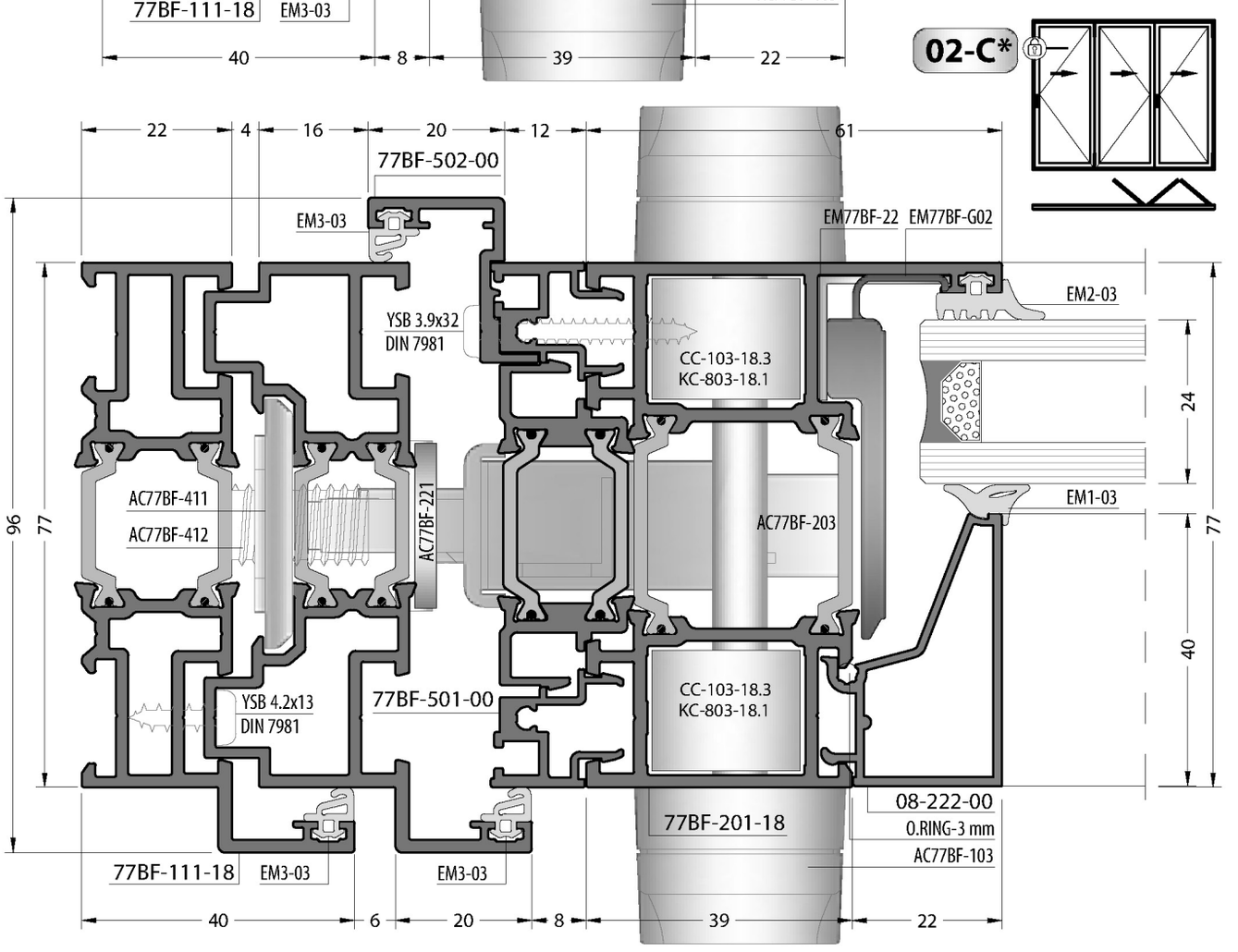

Frame Connection 90°/ Kasa Birleşim 90°

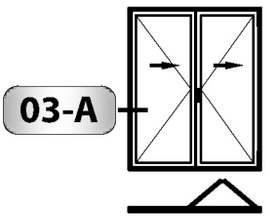

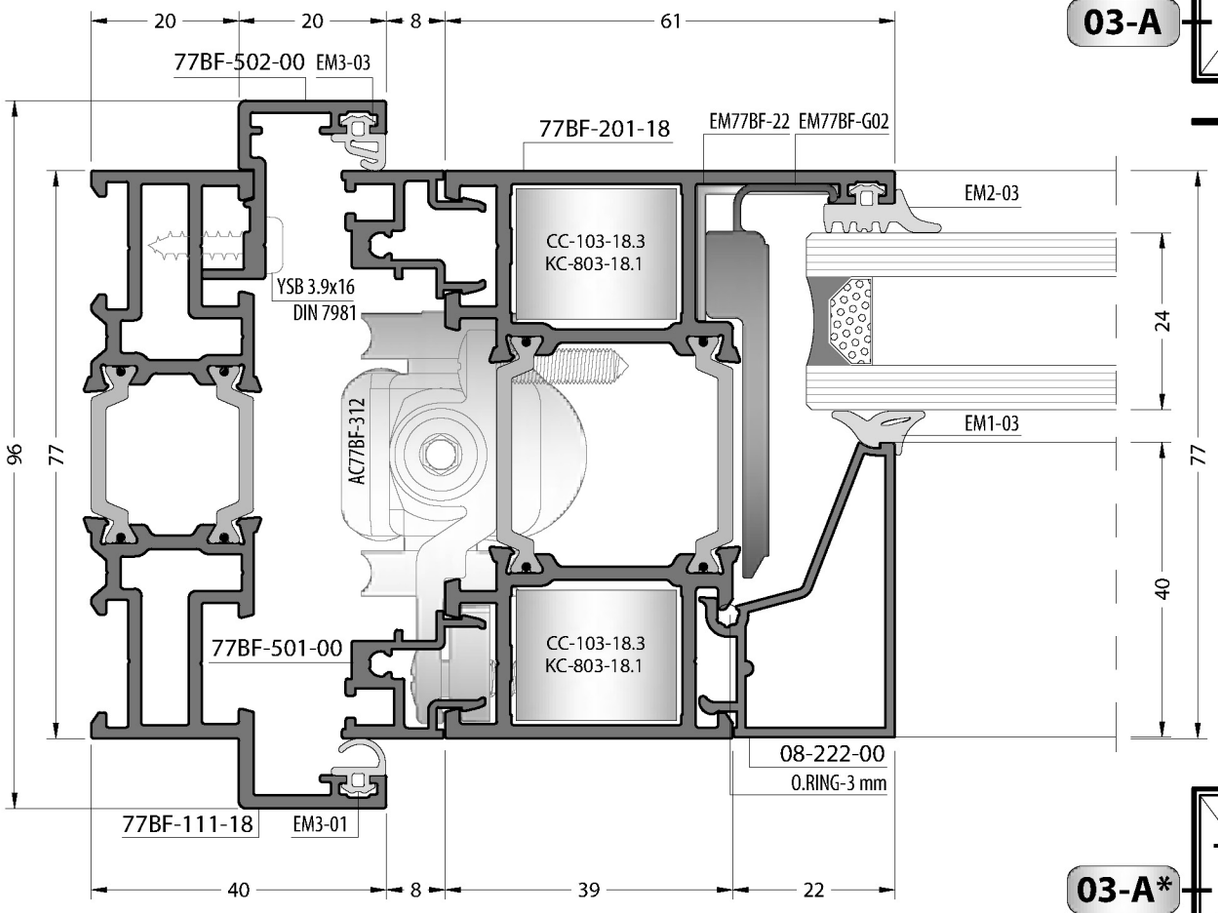

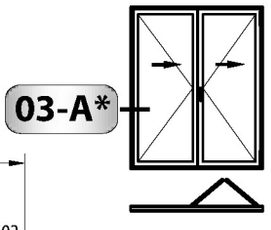

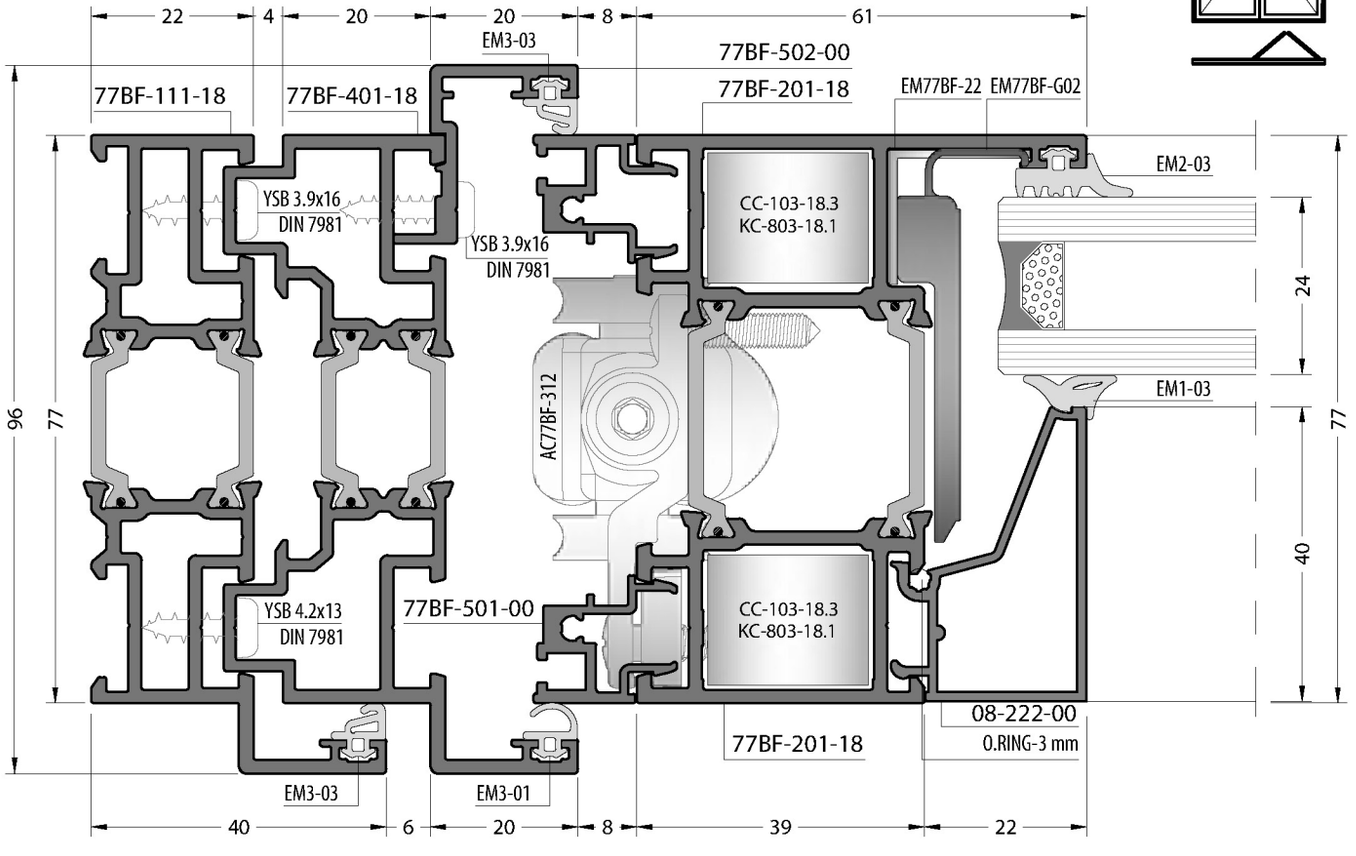

IMPORTANT!..
Always EM77BF-02 on the left sash, EM77BF-01 on the right sash!..
ÖNEMLİ : Her zaman soldaki kanatta EM77BF-02, sağdaki kanatta EM77BF-01 olmalıdır!..

04-A

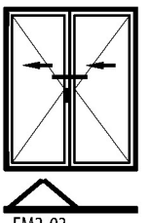

IMPORTANT!..
Always EM77BF-02 on the left sash, EM77BF-01 on the right sash!..
ÖNEMLİ : Her zaman soldaki kanatta EM77BF-02, sağdaki kanatta EM77BF-01 olmalıdır!..

05-A

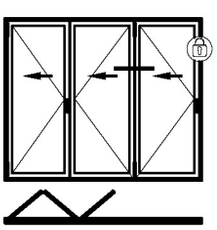

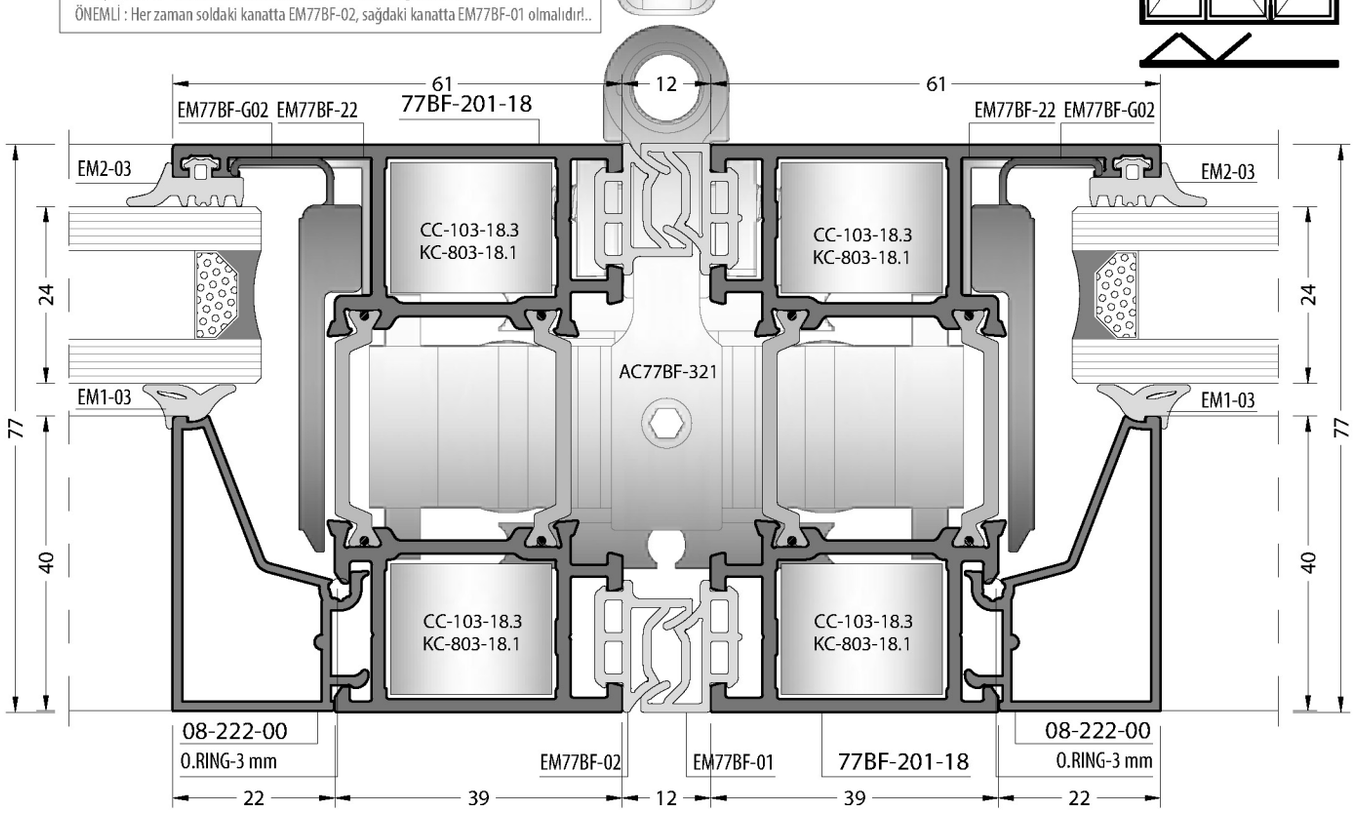

06-A1

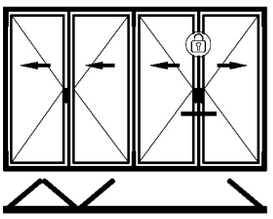

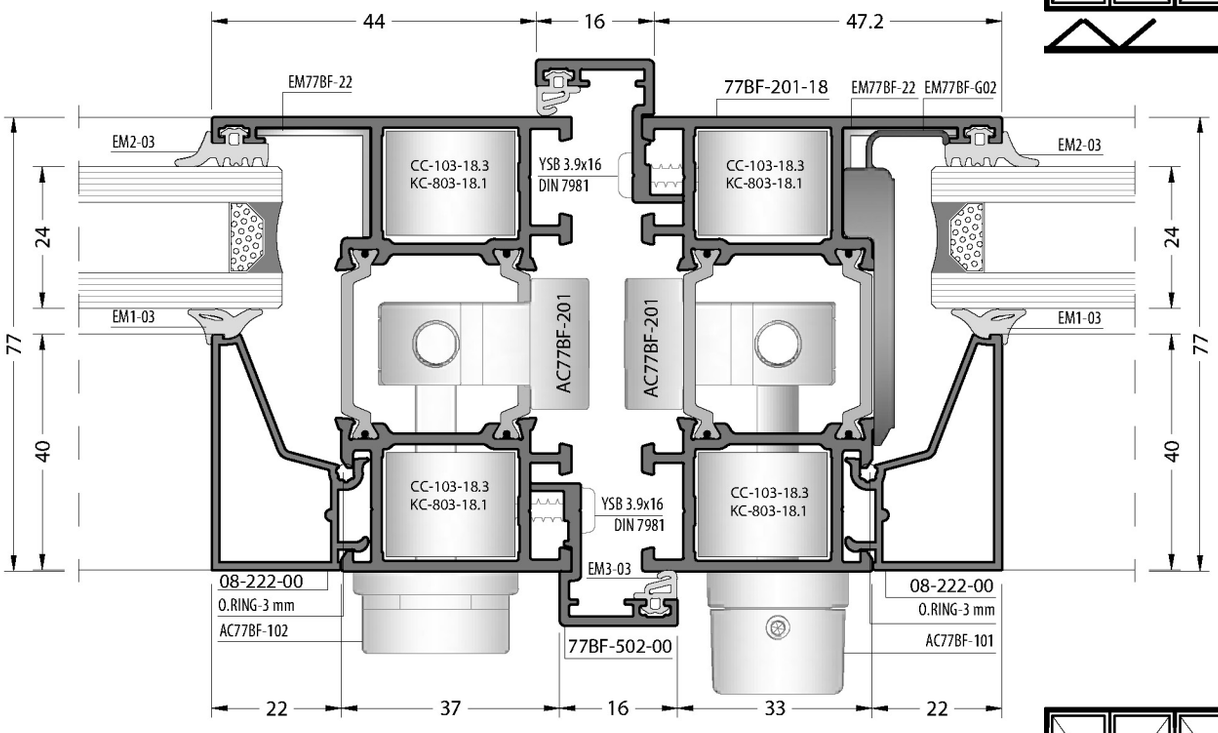

06-A2

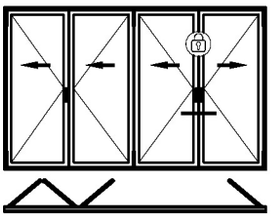

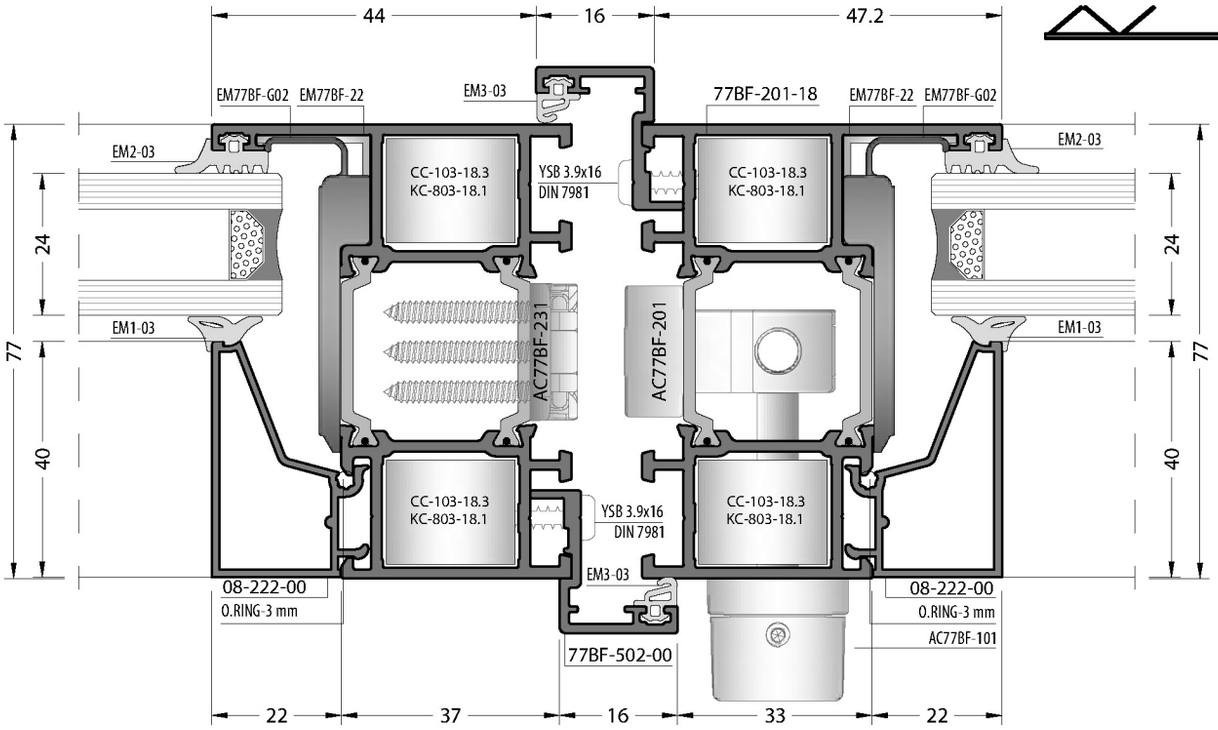

Not scaled / Ölçeksizdir

06-B1

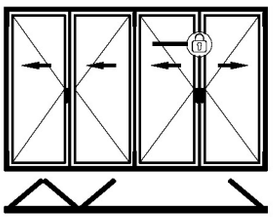

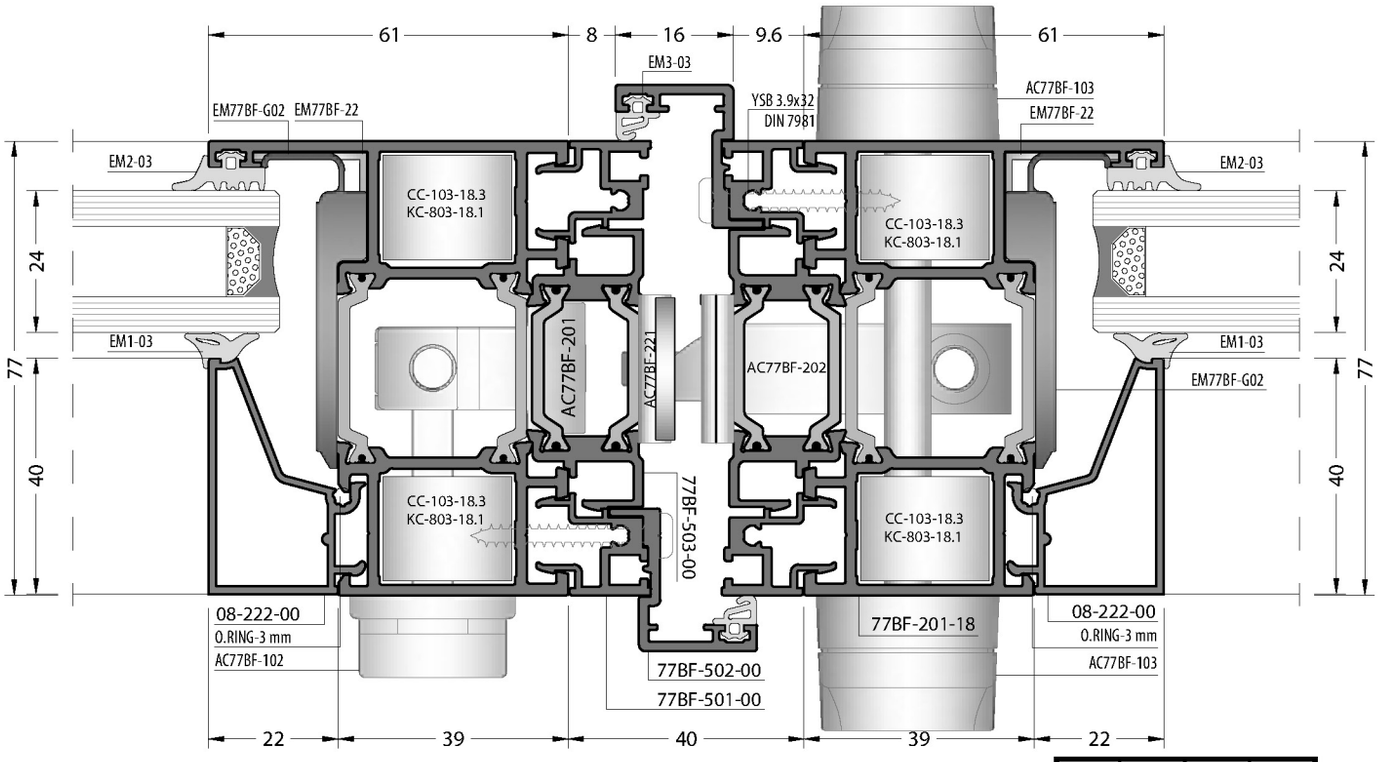

06-B2

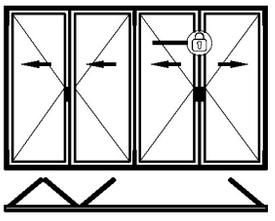

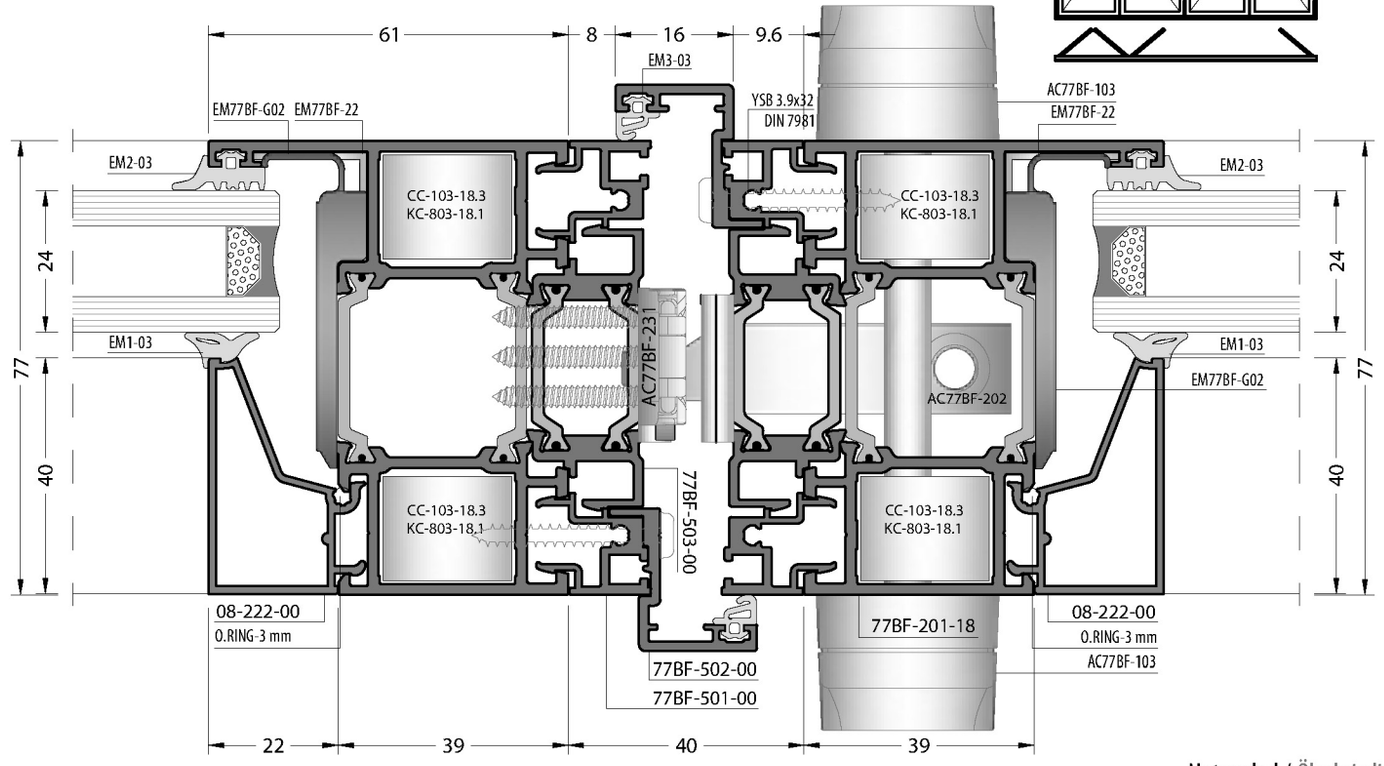

Not scaled / Ölçeksizdir

06-C1

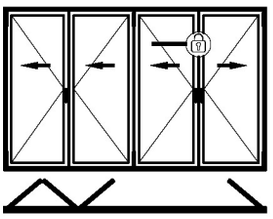

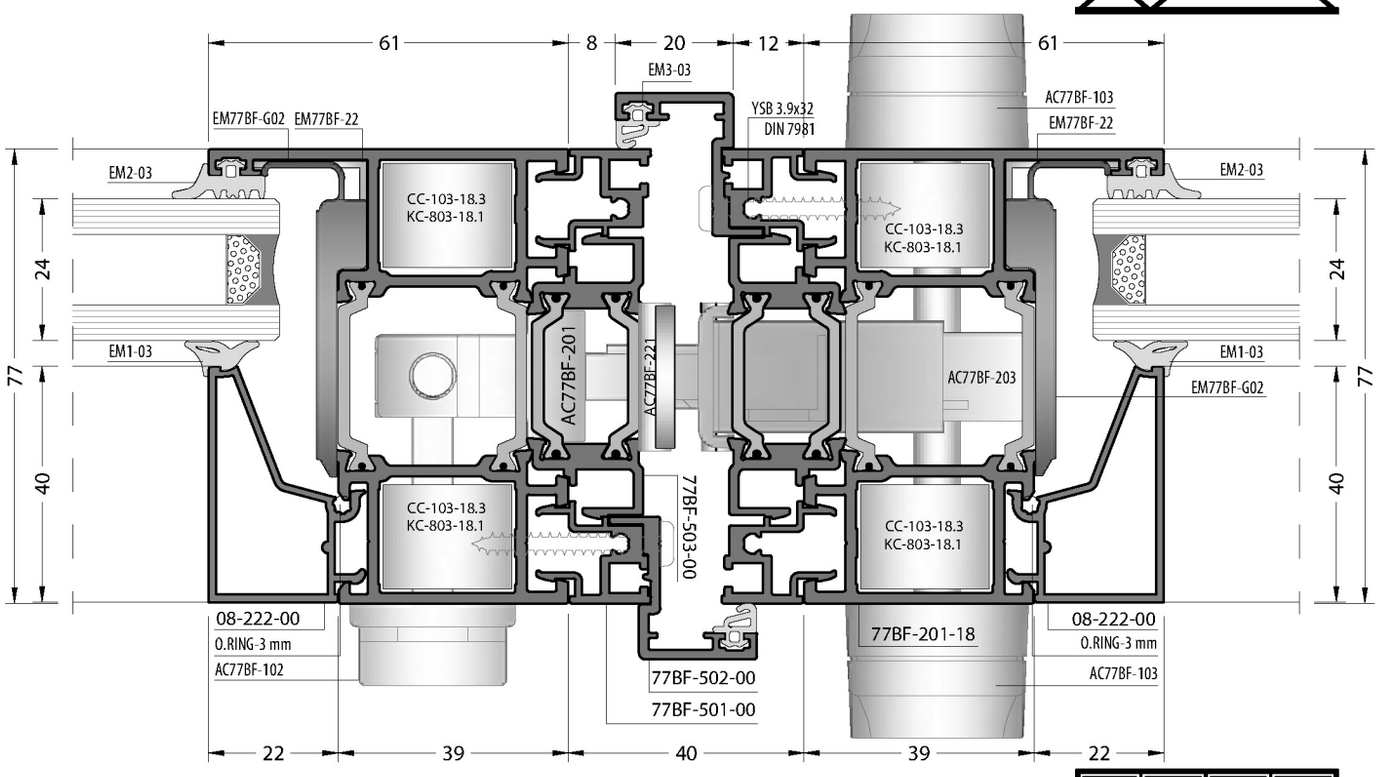

06-C2

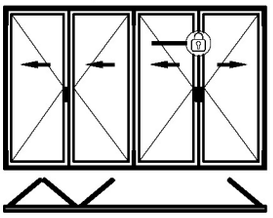

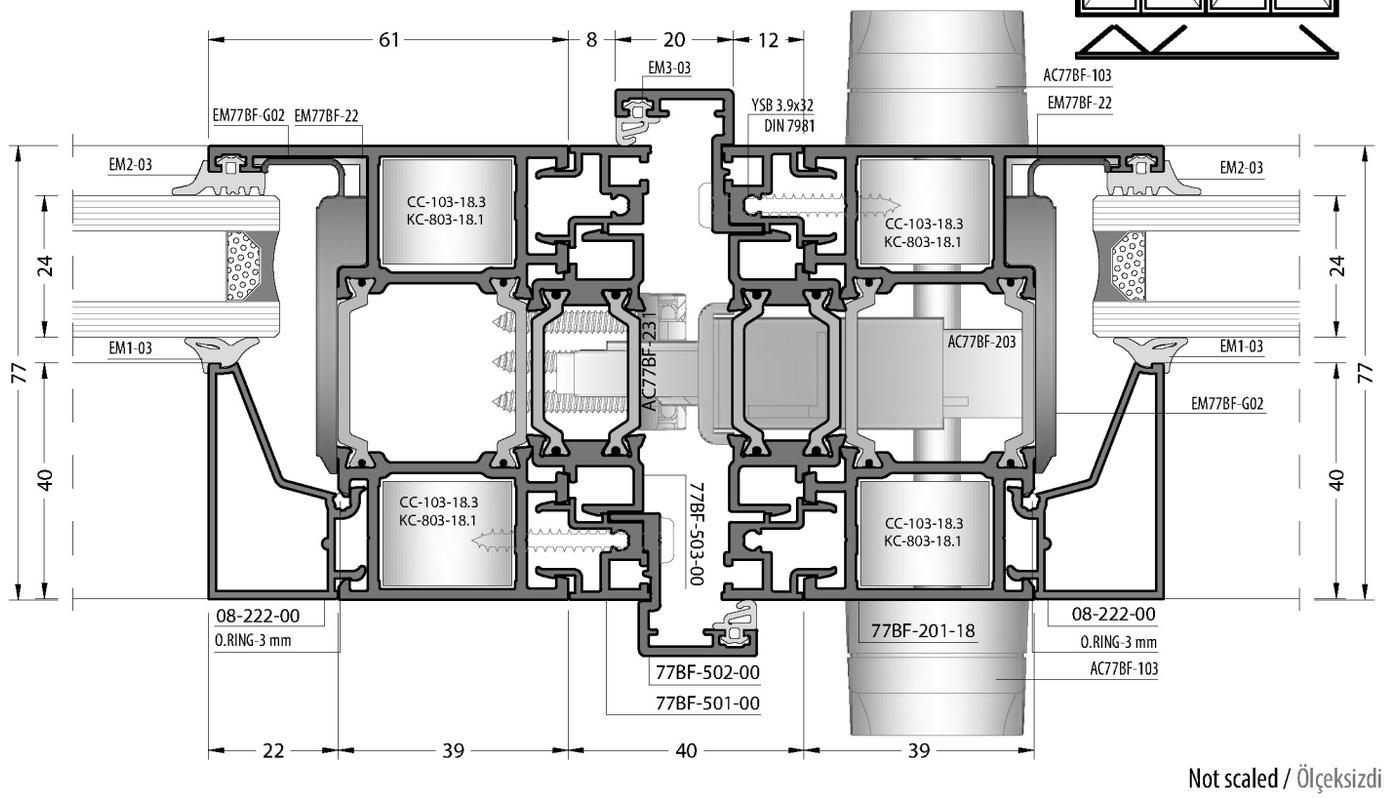

Not scaled / Ölçeksizdir

07-A

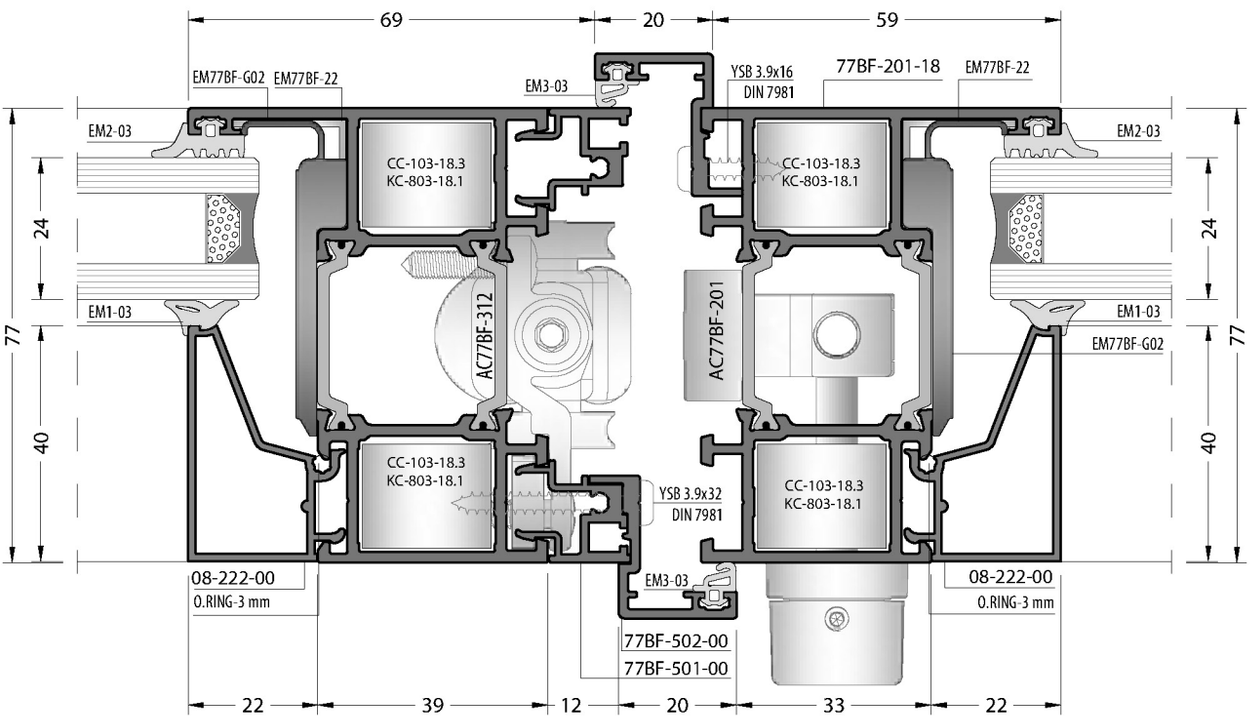

Not scaled / Ölçeksizdir

07-B

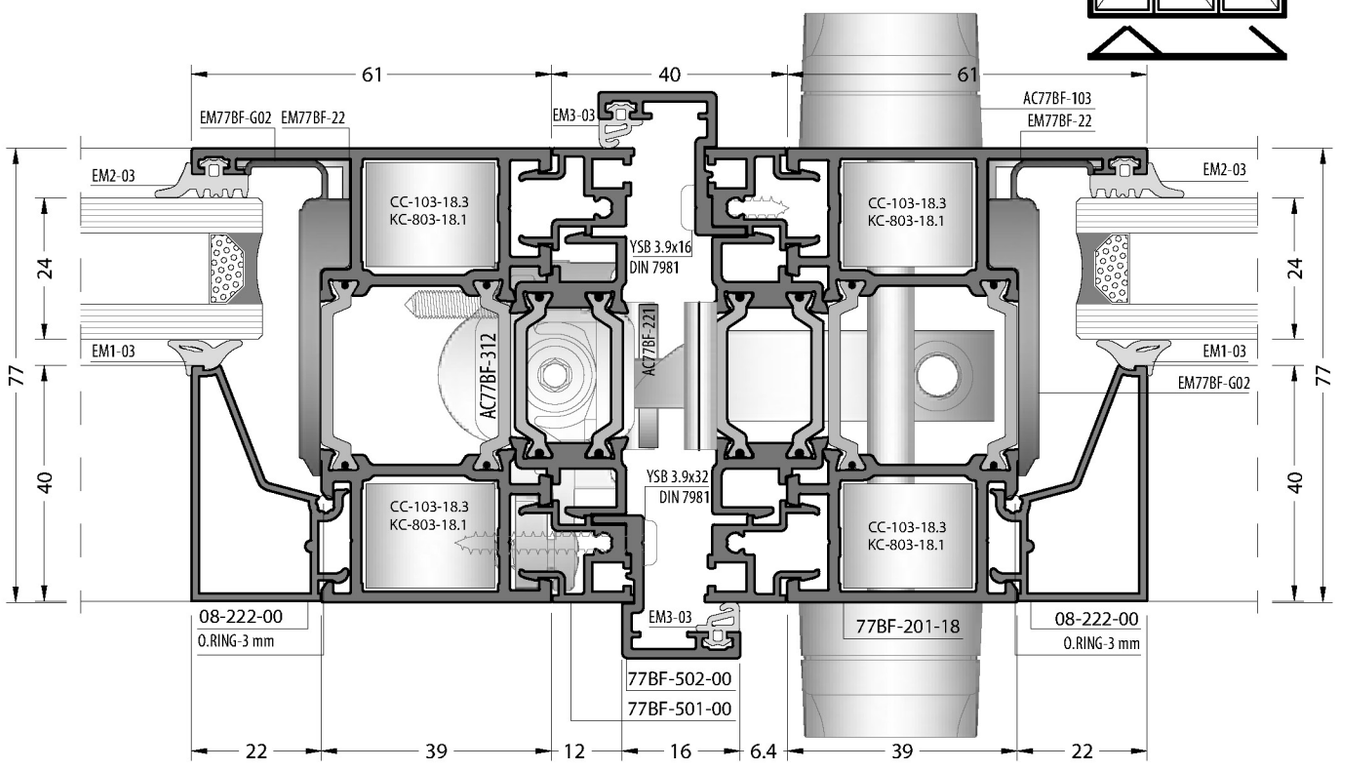

07-C

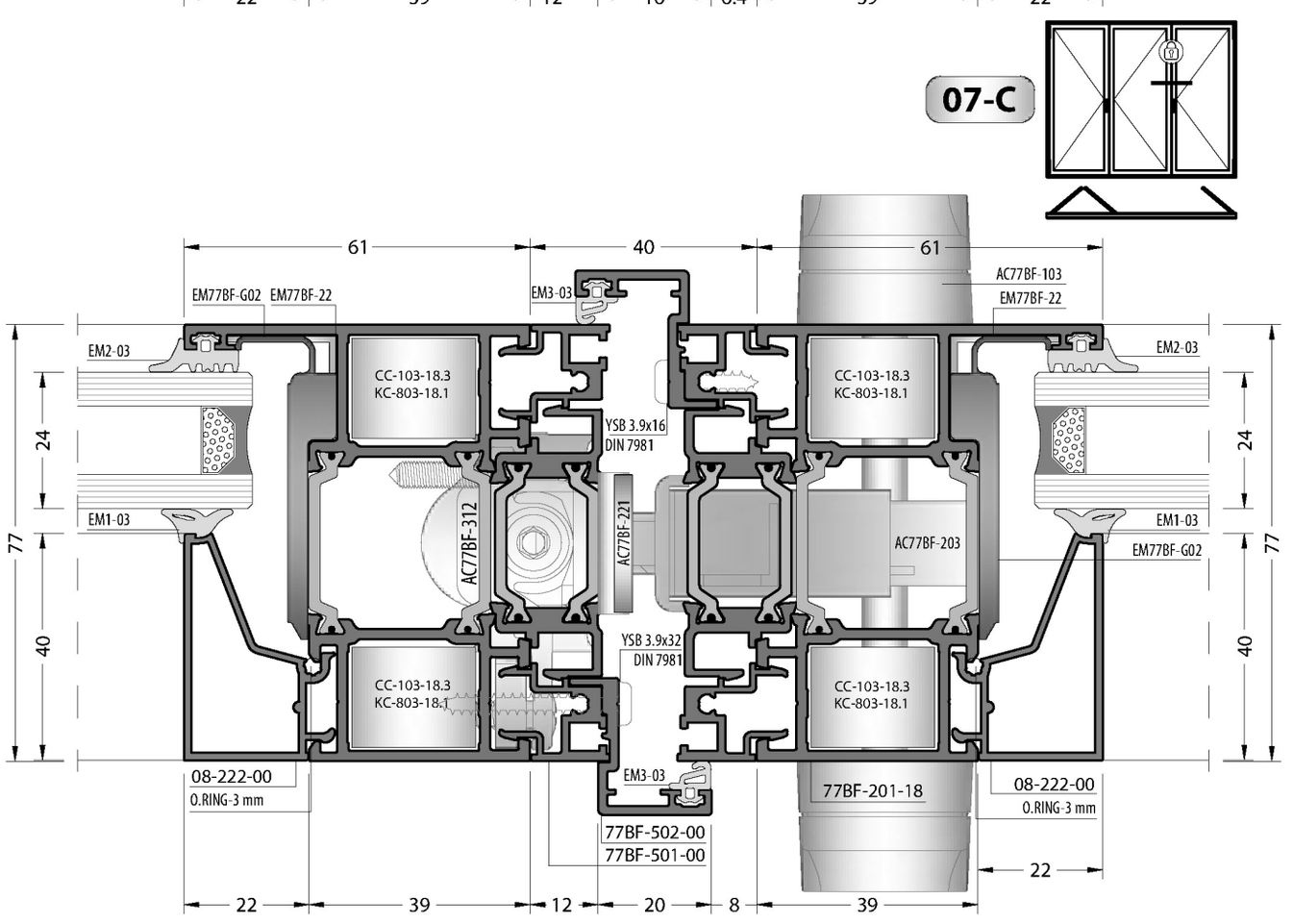

Not scaled / Ölçeksizdir

08-A

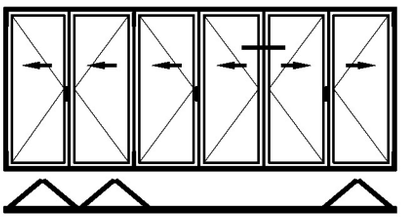

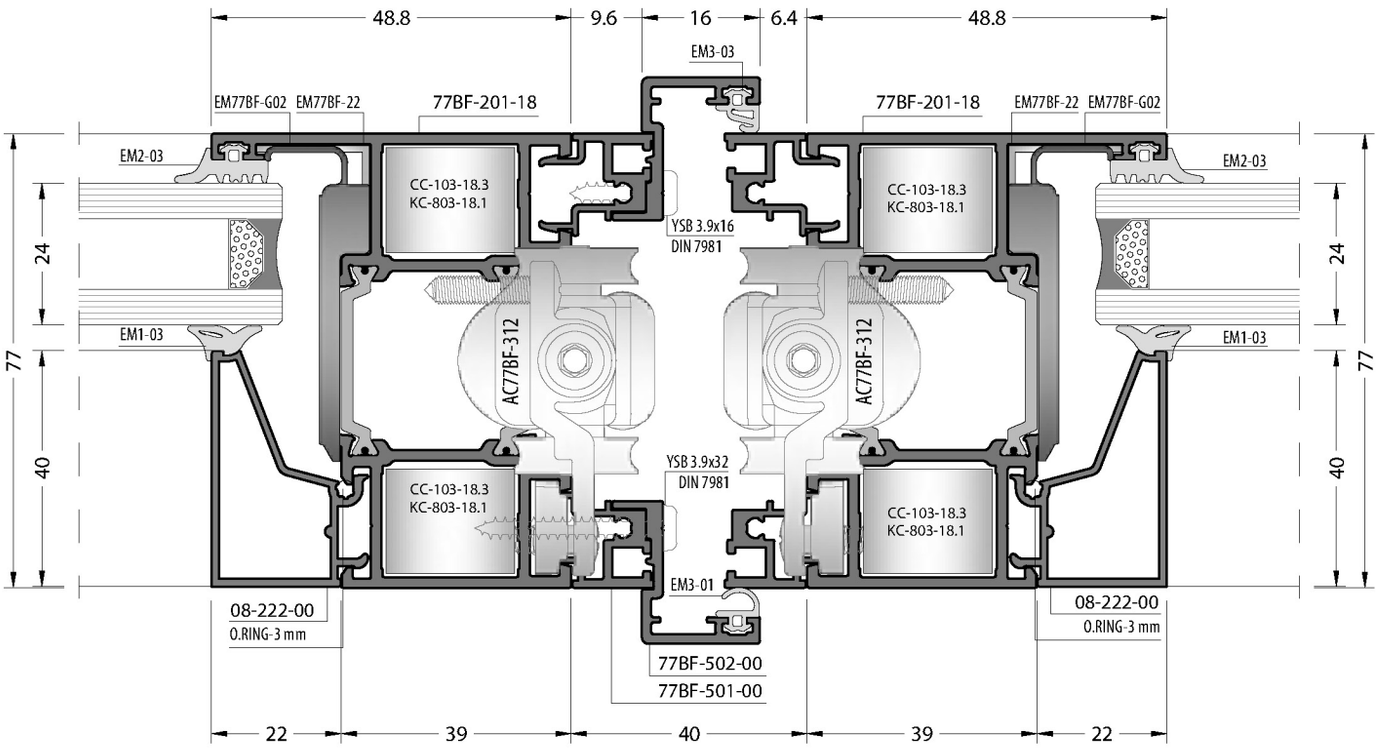

Not scaled / Ölçeksizdir

09-A

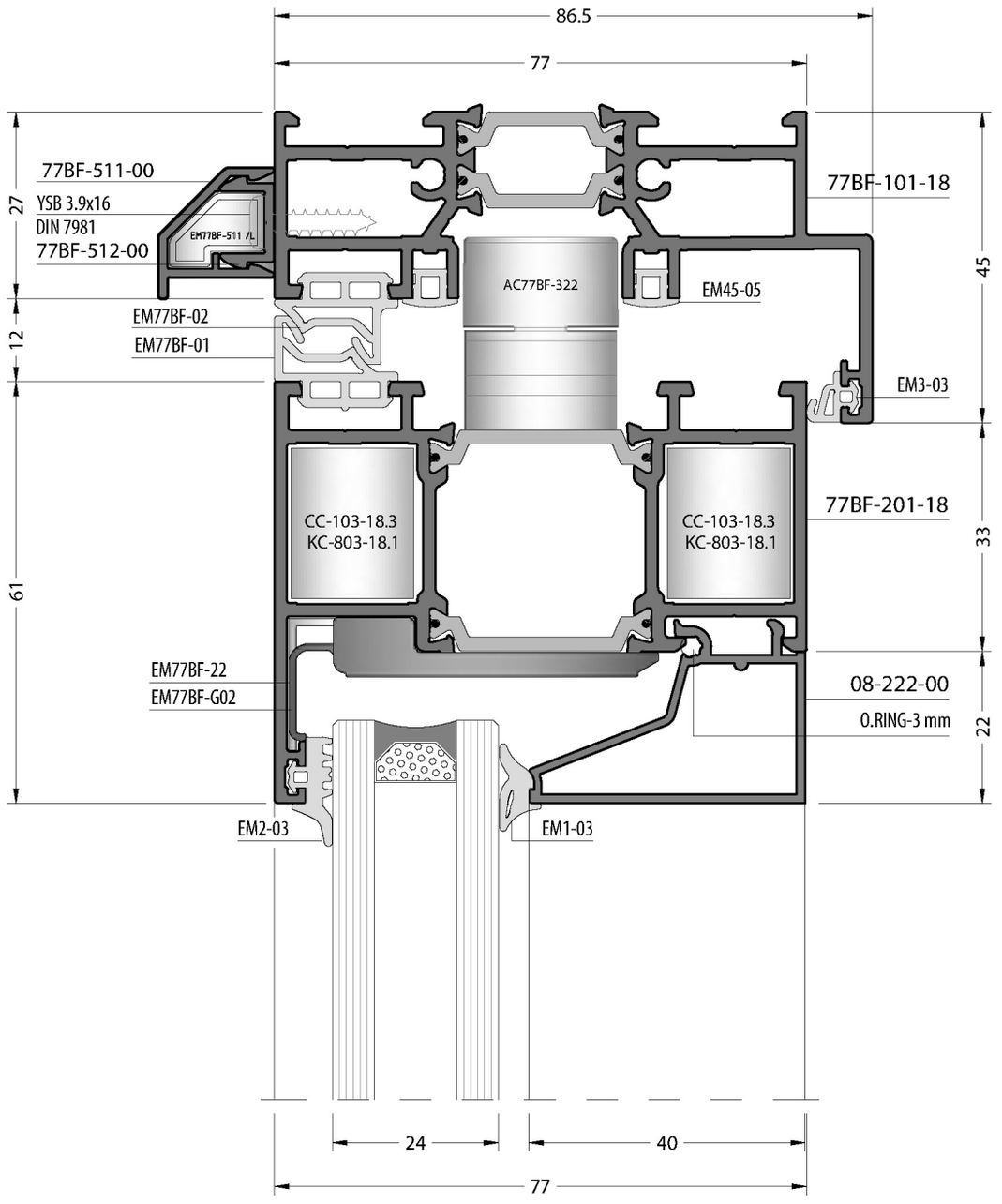
86.5
77
77BF-511-00
YSB 3.9x16
DIN 7981
77BF-512-00
EM77BF-511 /L
27
12
61
EM77BF-02
EM77BF-01
AC77BF-322
EM45-05
77BF-101-18
45
EM3-03
CC-103-18.3
KC-803-18.1
CC-103-18.3
KC-803-18.1
77BF-201-18
33
EM77BF-22
EM77BF-G02
08-222-00
O.RING-3 mm
22
EM2-03
EM1-03
24
40
77

10-A

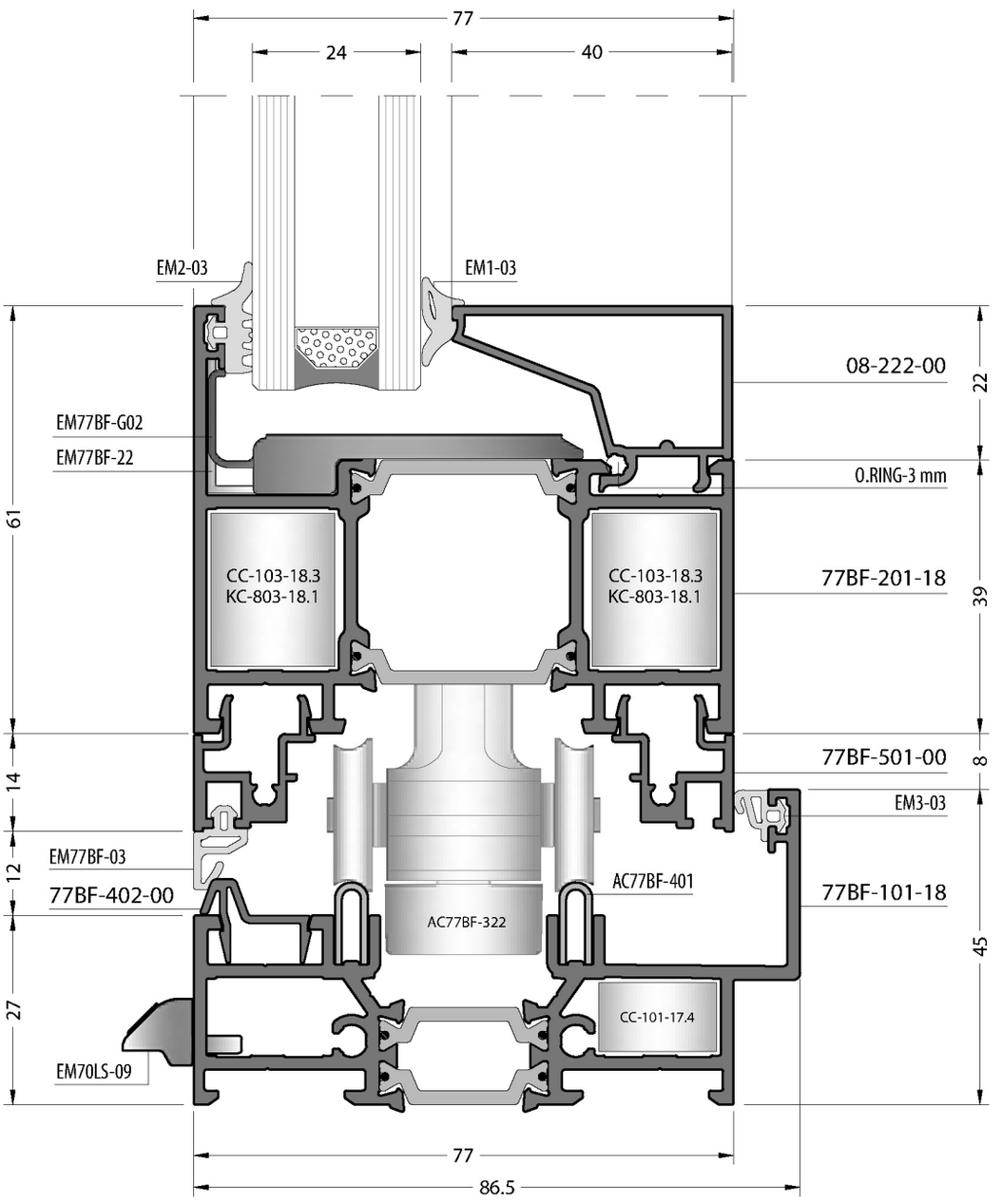
77
24
40
EM2-03
EM1-03
08-222-00
EM77BF-G02
EM77BF-22
0.RING-3 mm
CC-103-18.3
KC-803-18.1
CC-103-18.3
KC-803-18.1
77BF-201-18
77BF-501-00
EM3-03
EM77BF-03
77BF-402-00
AC77BF-401
77BF-101-18
AC77BF-322
CC-101-17.4
EM70LS-09
61
14
12
27
22
39
8
45
77
86.5

10-B

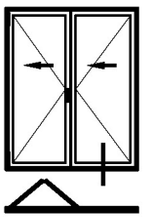

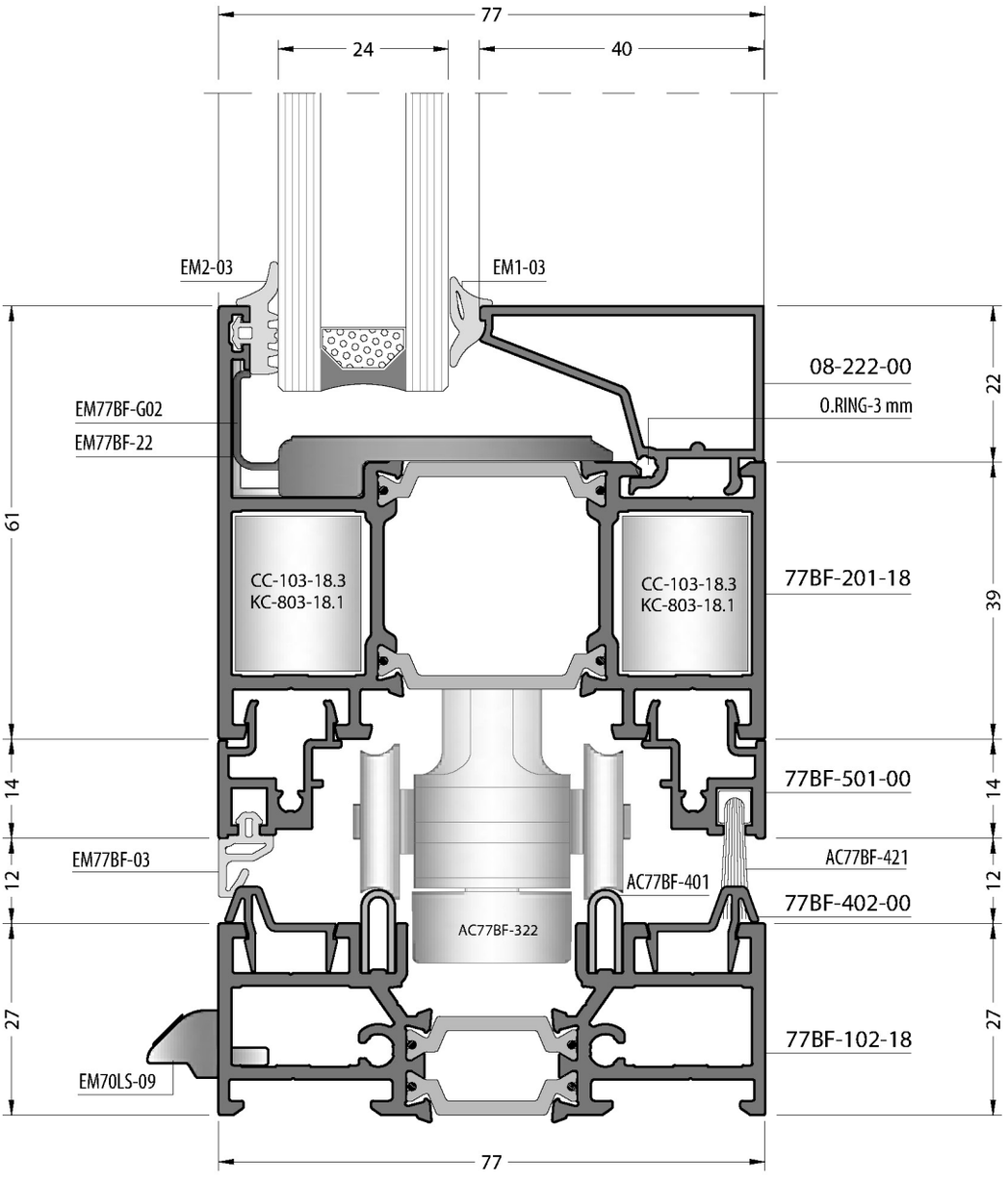
77
24
40
EM2-03
EM1-03
08-222-00
O.RING-3 mm
EM77BF-G02
EM77BF-22
CC-103-18.3
KC-803-18.1
CC-103-18.3
KC-803-18.1
77BF-201-18
77BF-501-00
EM77BF-03
AC77BF-421
AC77BF-401
77BF-402-00
AC77BF-322
77BF-102-18
EM70LS-09
61
14
12
27
22
39
14
12
27
77

10-C

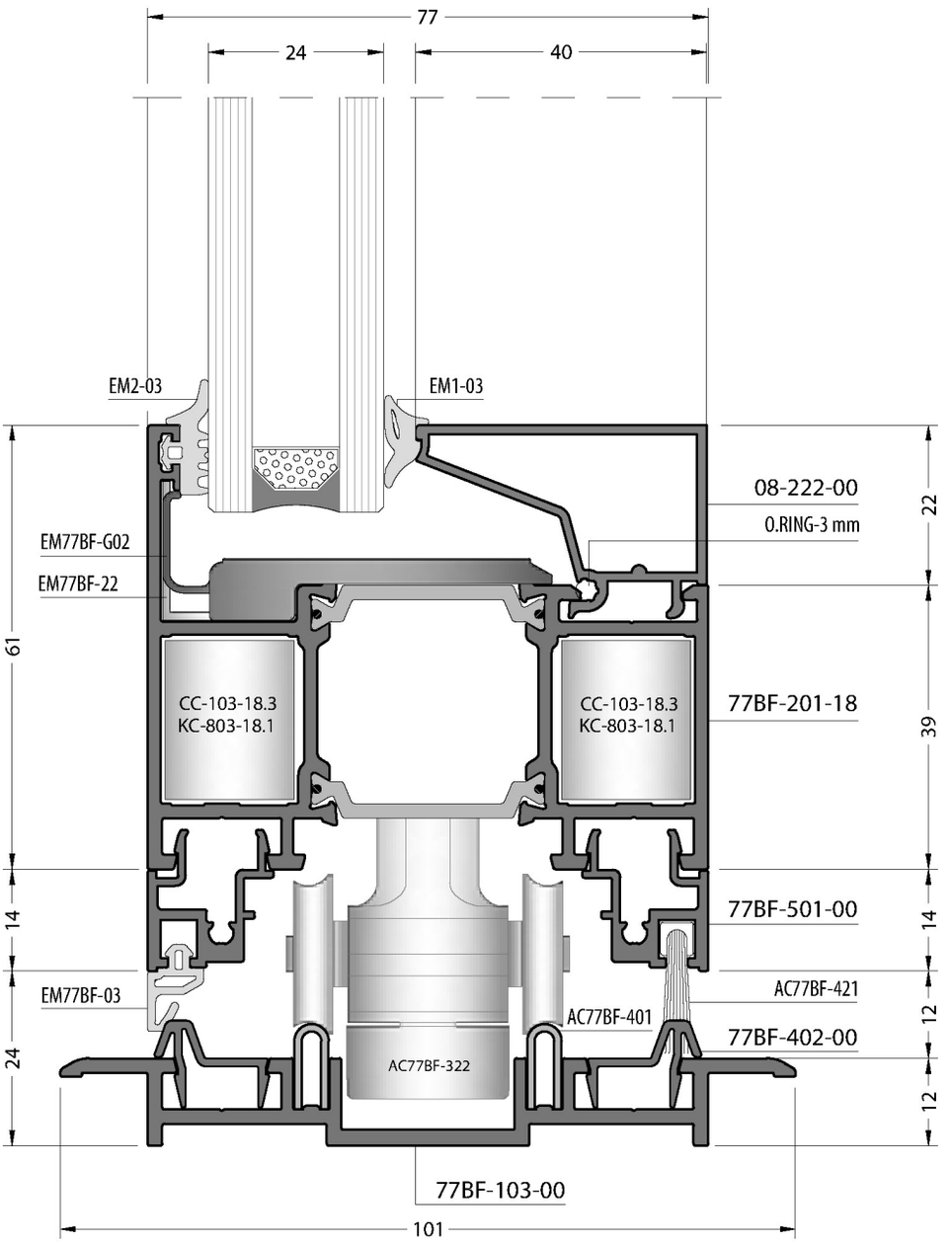
77
24
40
EM2-03
EM1-03
08-222-00
O.RING-3 mm
EM77BF-G02
EM77BF-22
CC-103-18.3
KC-803-18.1
CC-103-18.3
KC-803-18.1
77BF-201-18
77BF-501-00
EM77BF-03
AC77BF-421
AC77BF-401
77BF-402-00
AC77BF-322
77BF-103-00
101
61
14
24
22
39
14
12
12

10-D

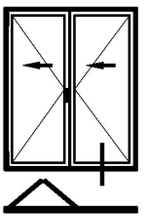

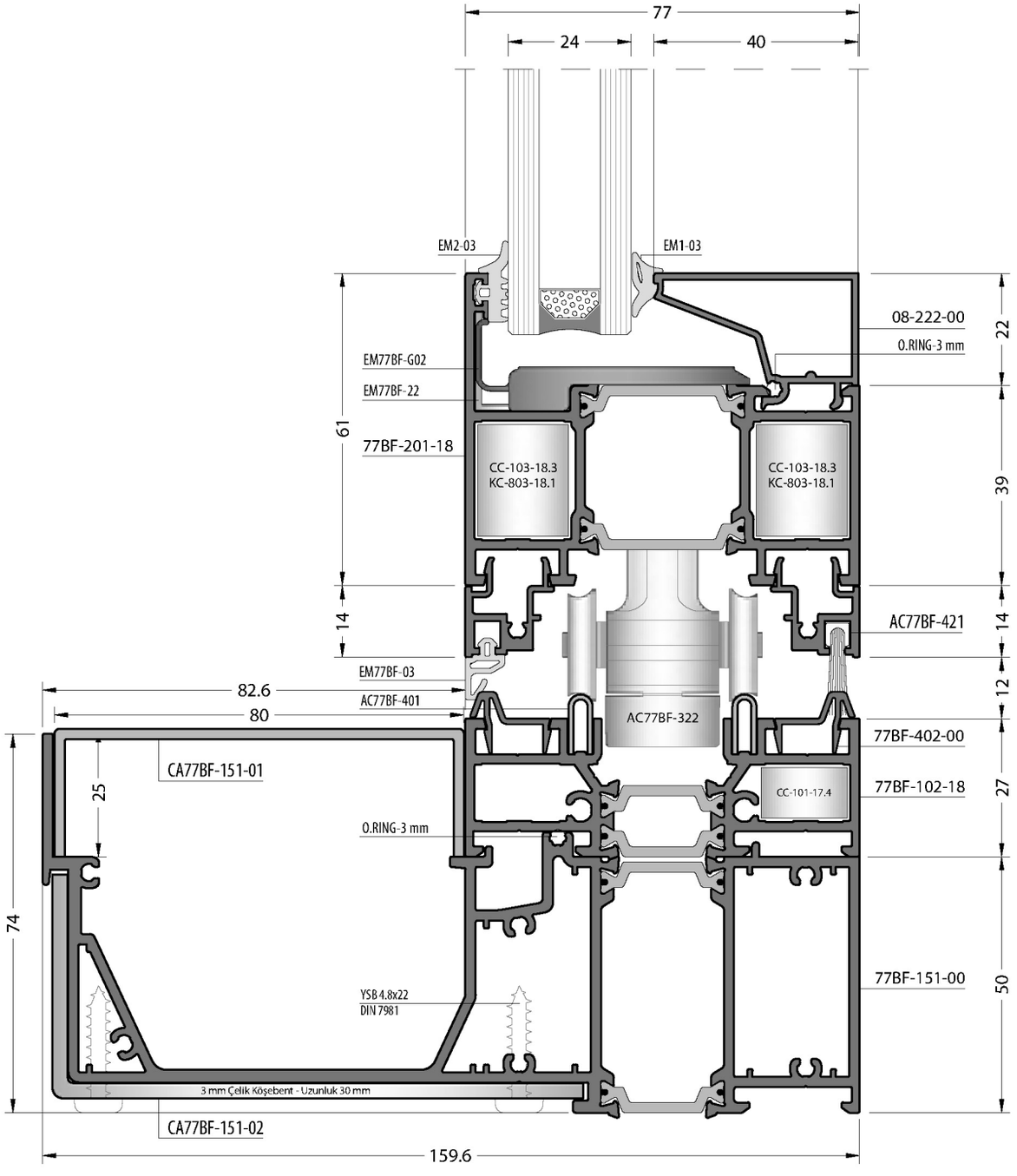

Not scaled / Ölçeksizdir

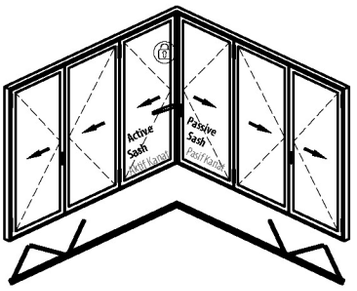

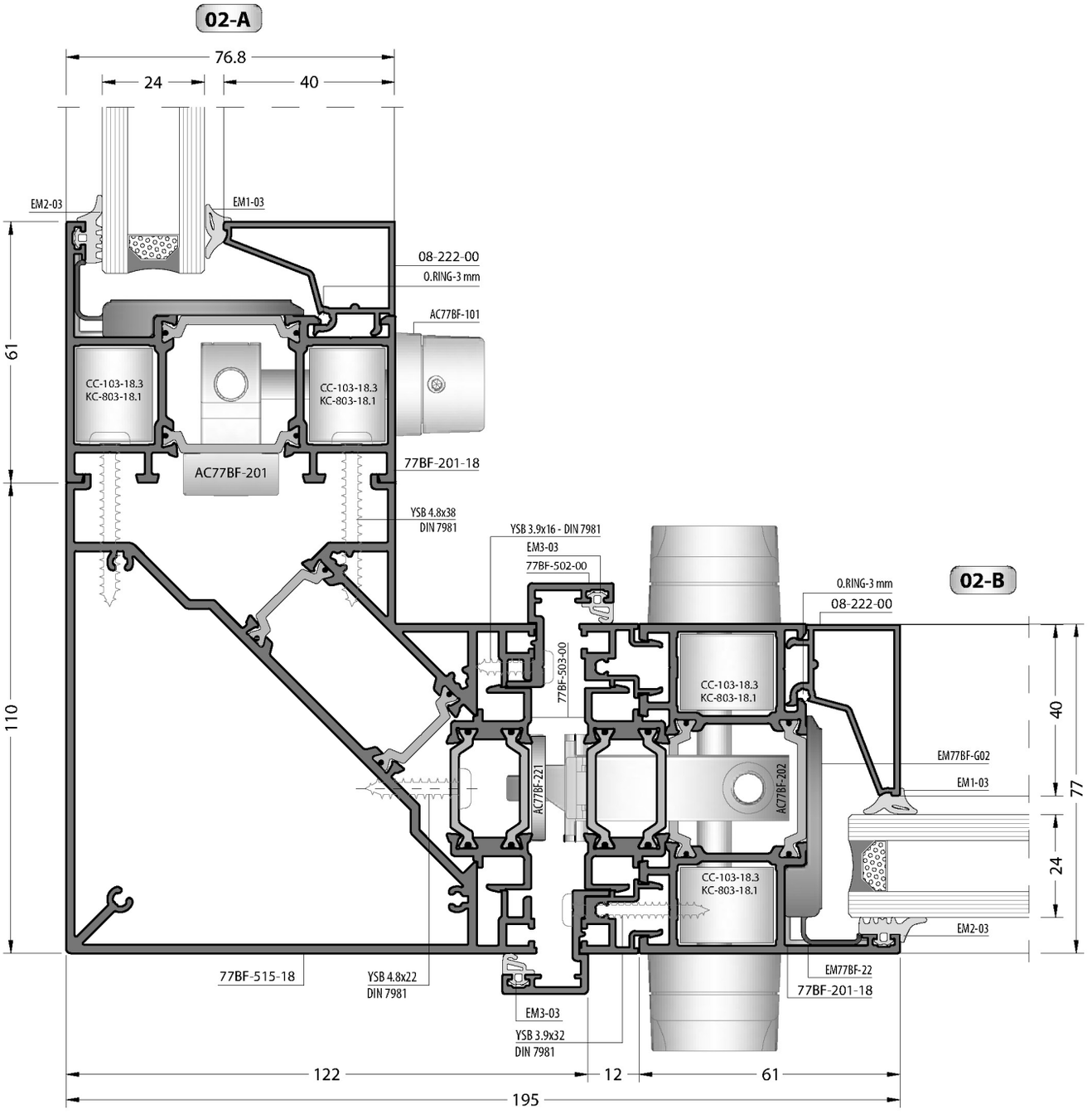

Not scaled / Ölçeksizdir

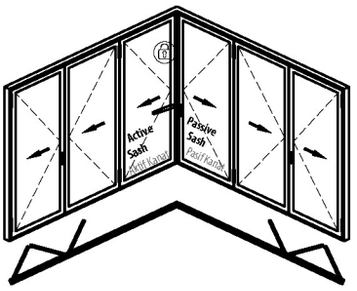

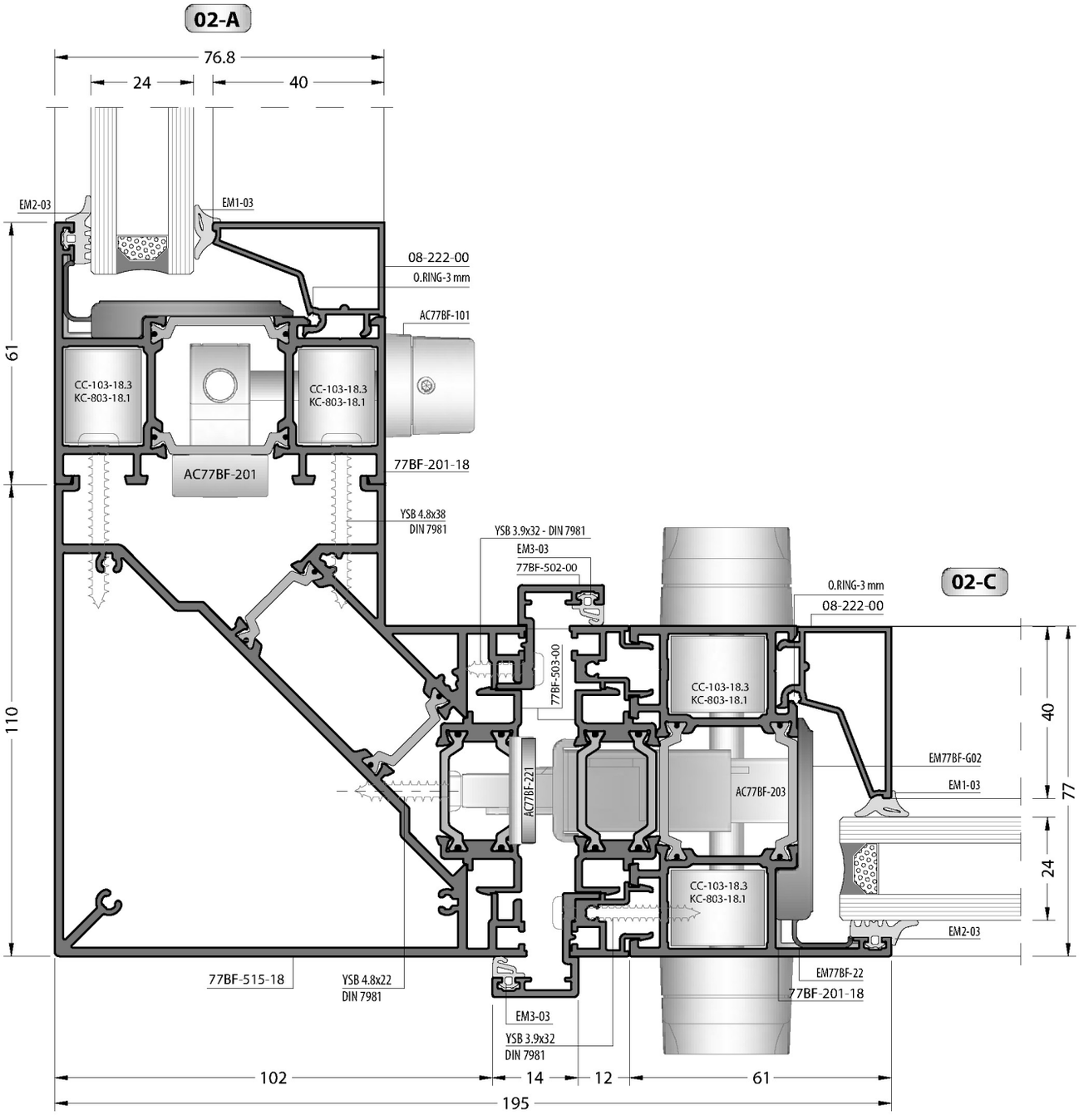

Not scaled / Ölçeksizdir

45°
DETAILS
DETAYLAR

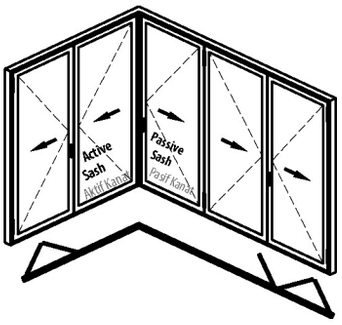

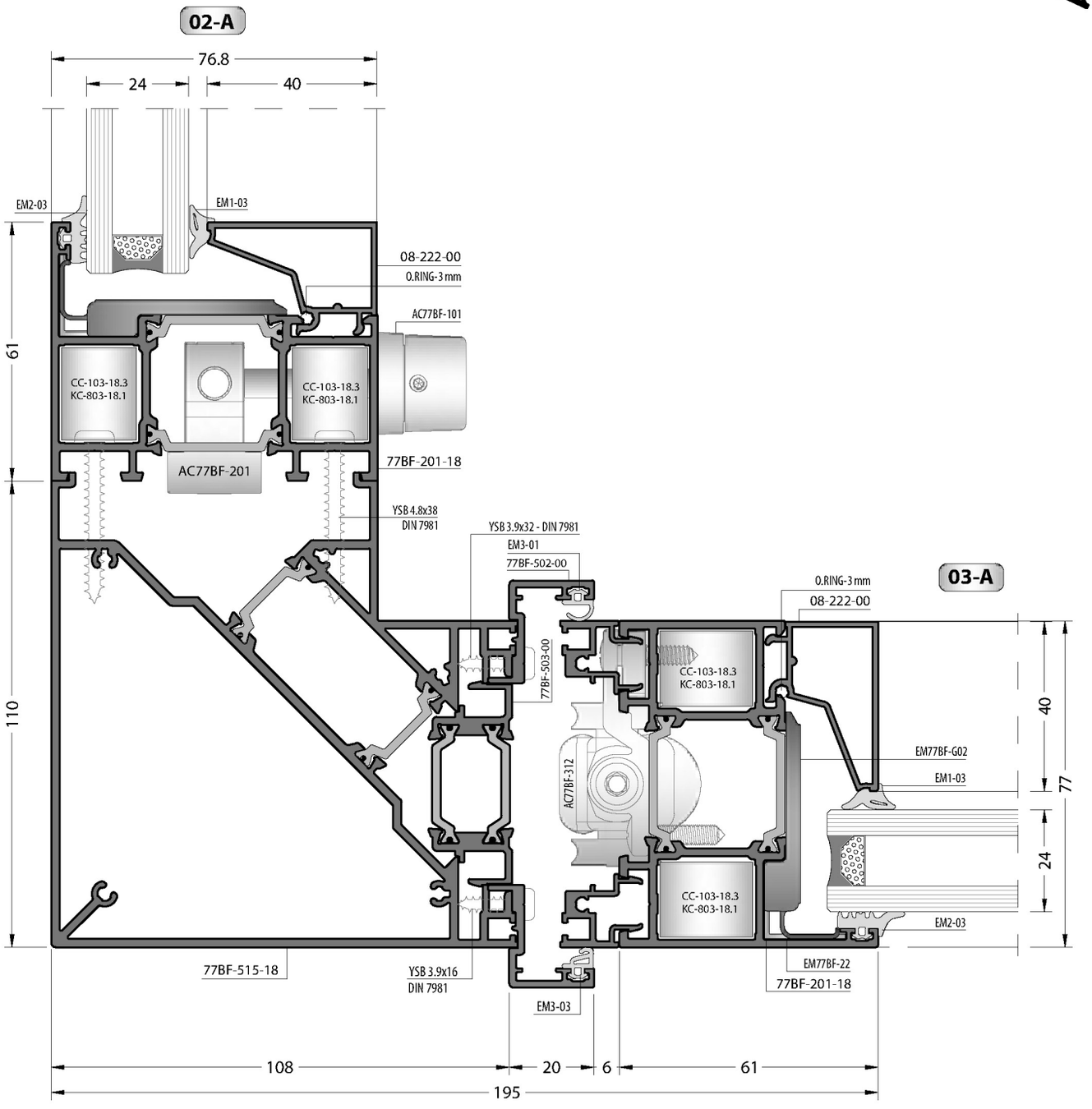

Not scaled / Ölçeksizdir

Frame Connection 45°/ Kasa Birleşim 45°

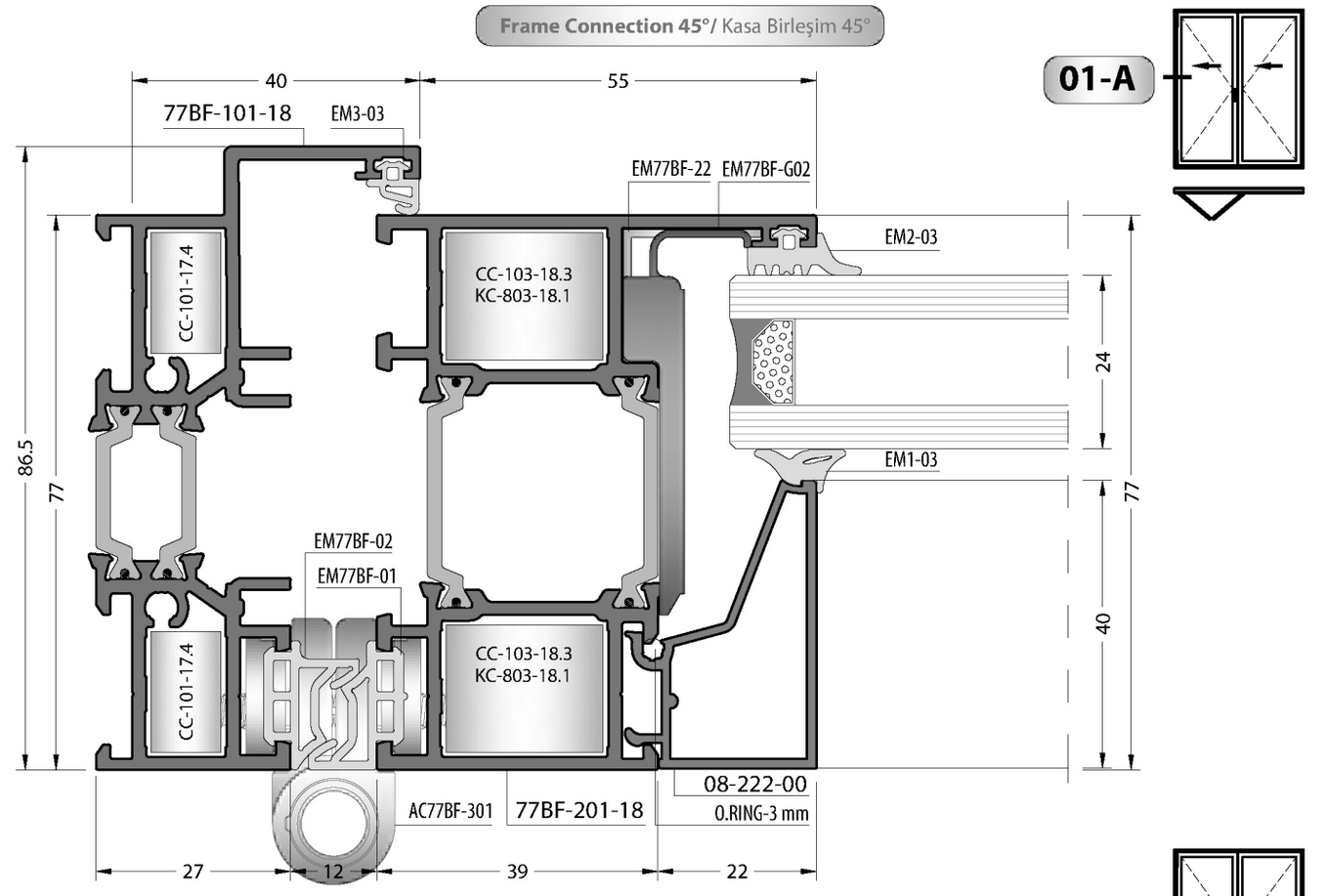

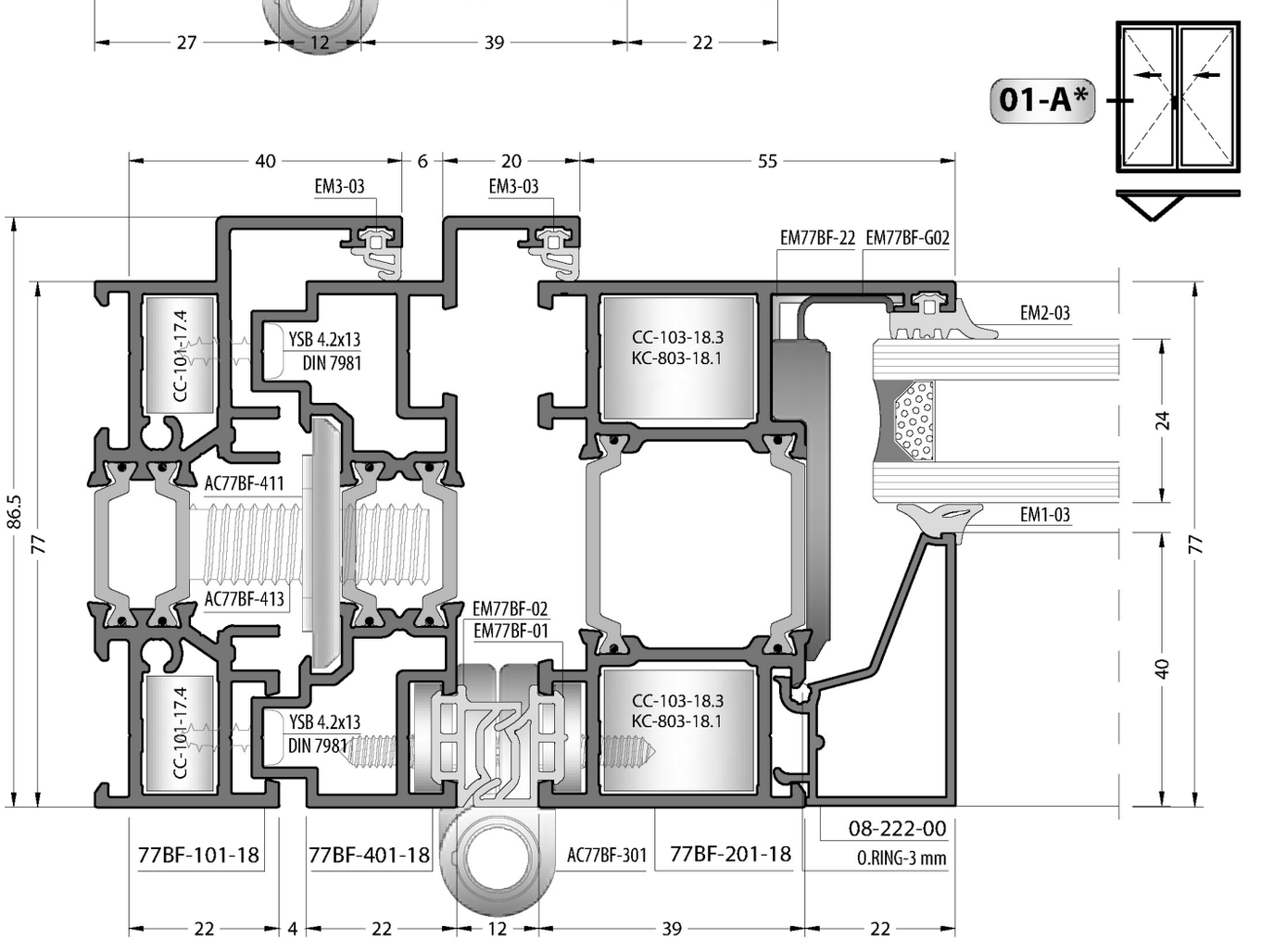

Frame Connection 45°/ Kasa Birleşim 45°

02-A

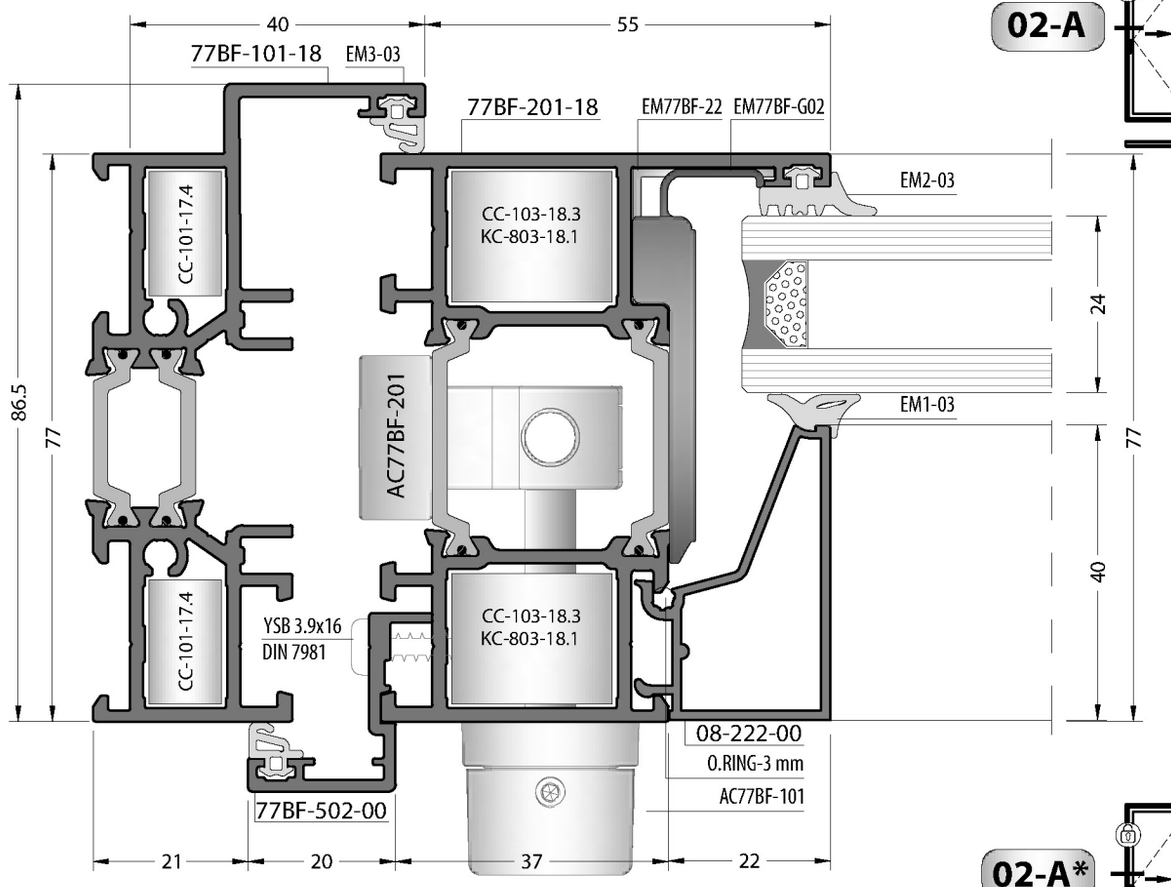

02-A*

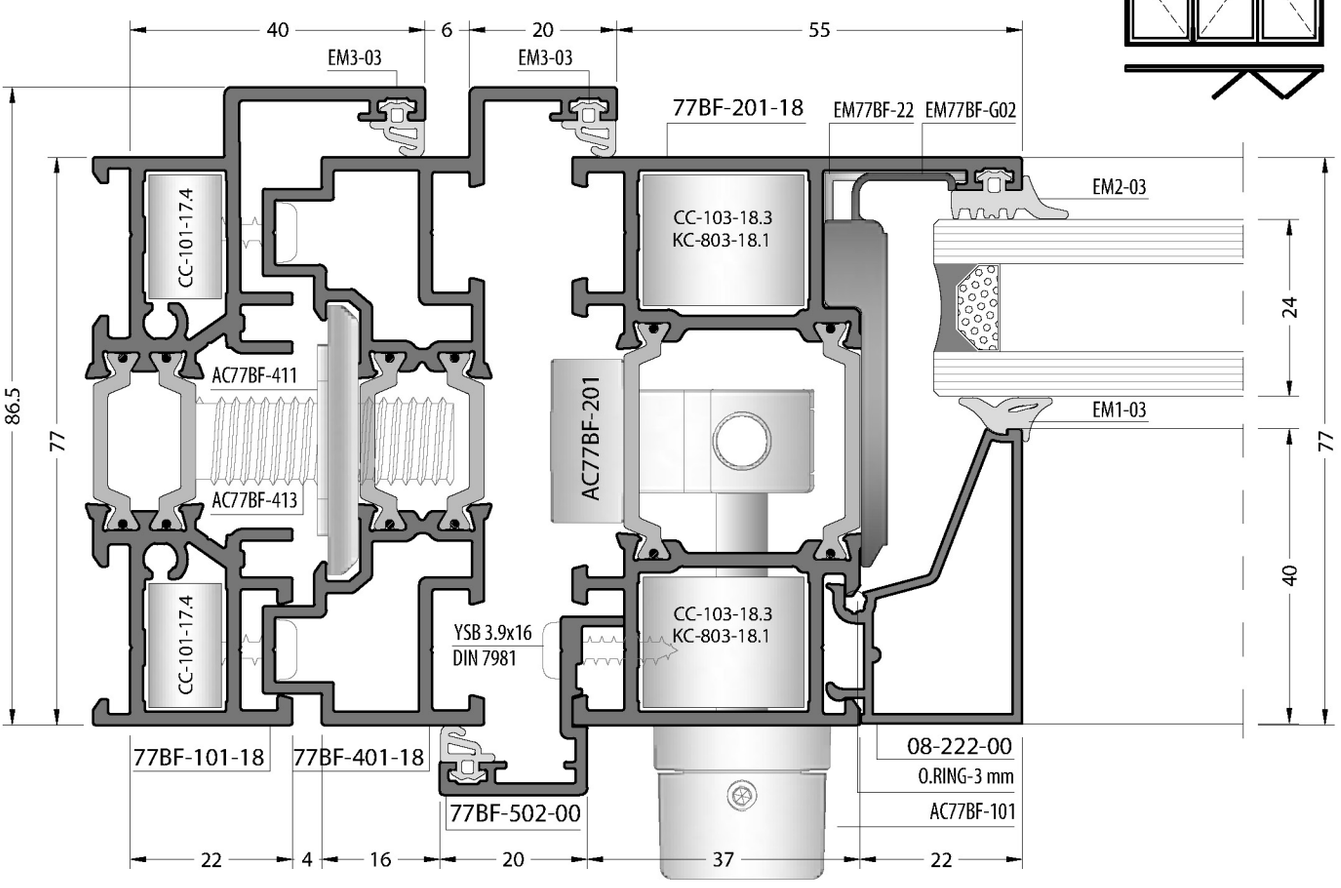

Frame Connection 45°/ Kasa Birleşim 45°

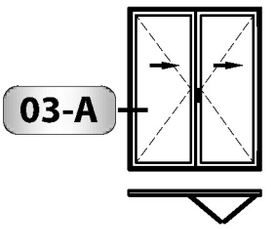

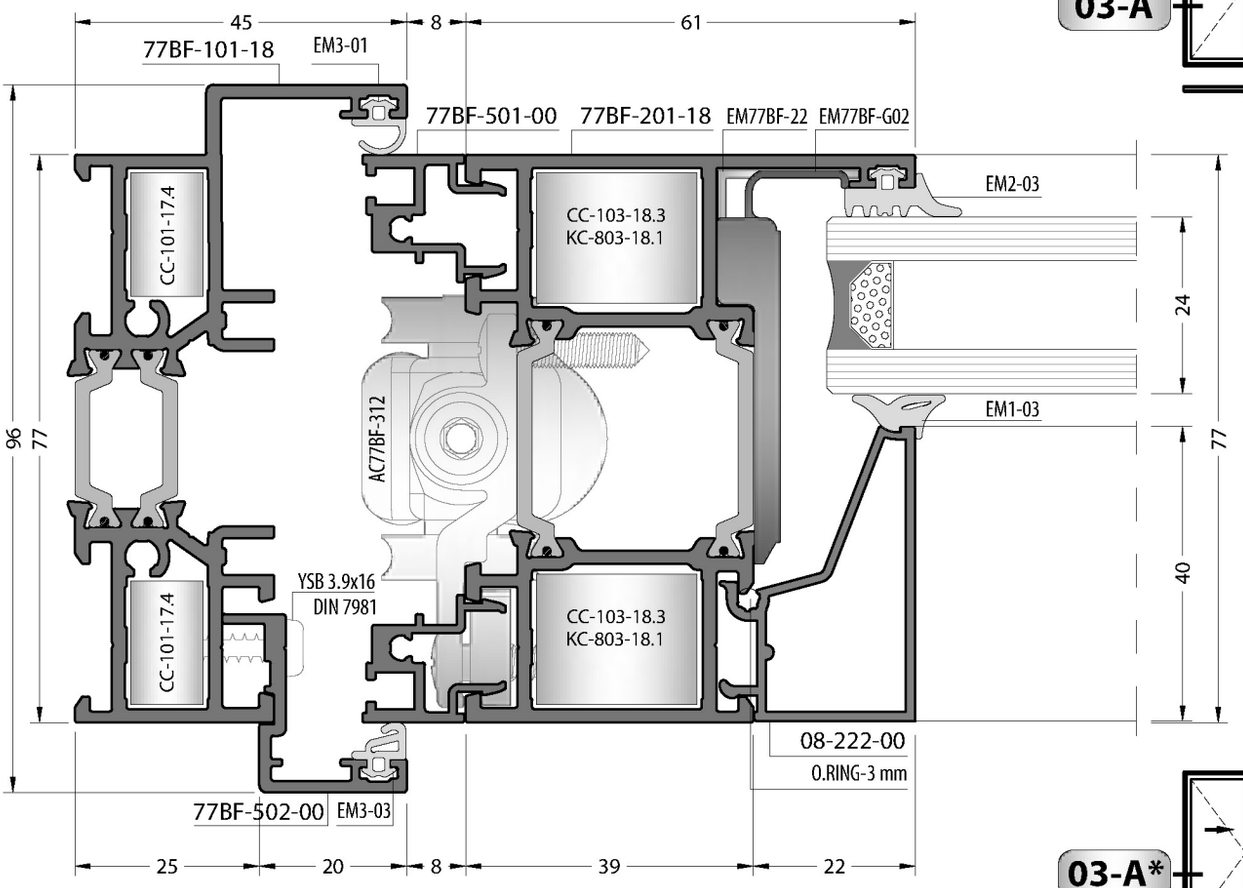

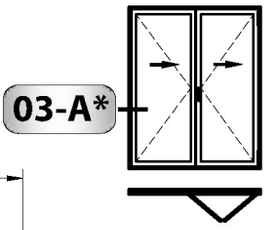

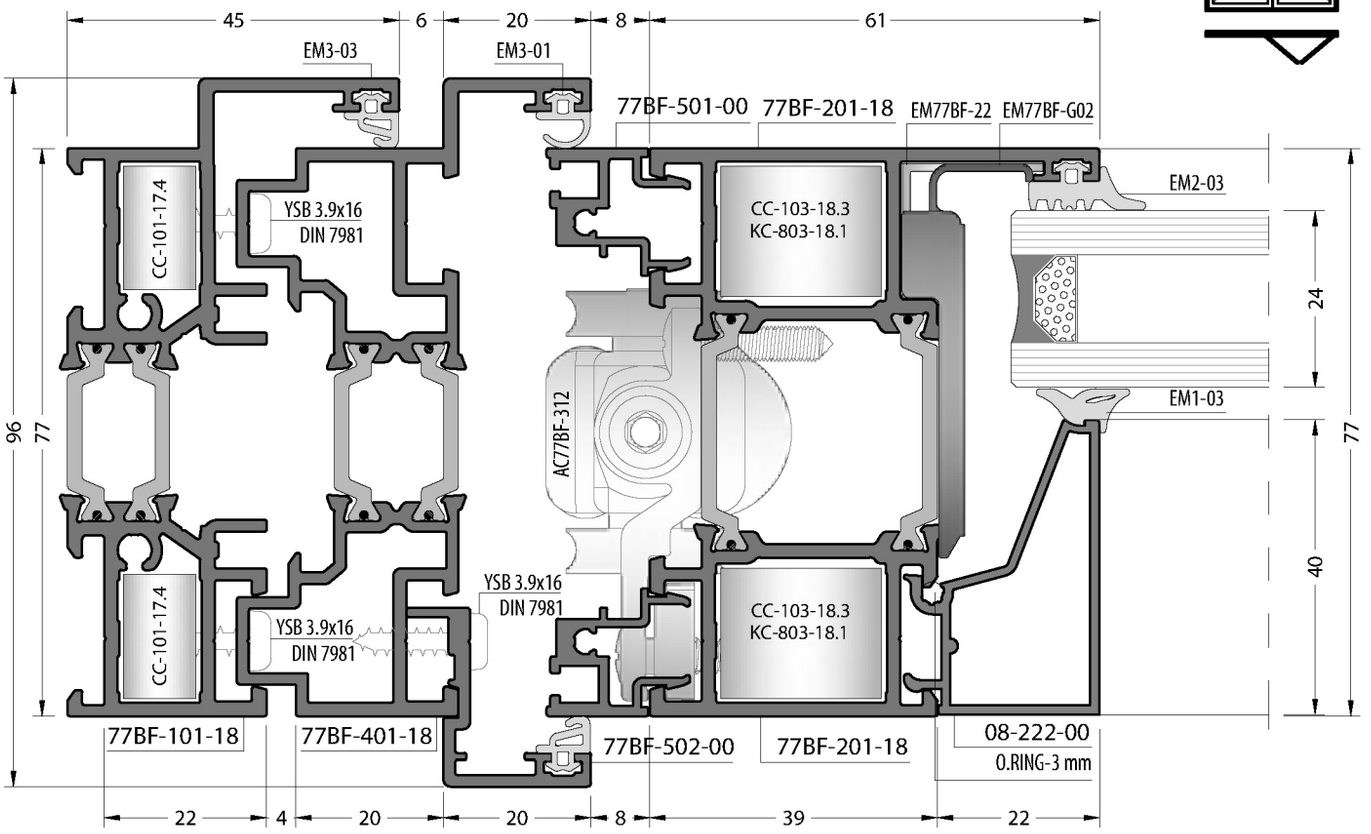

09-A

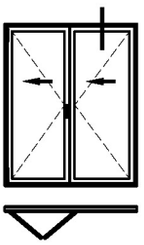

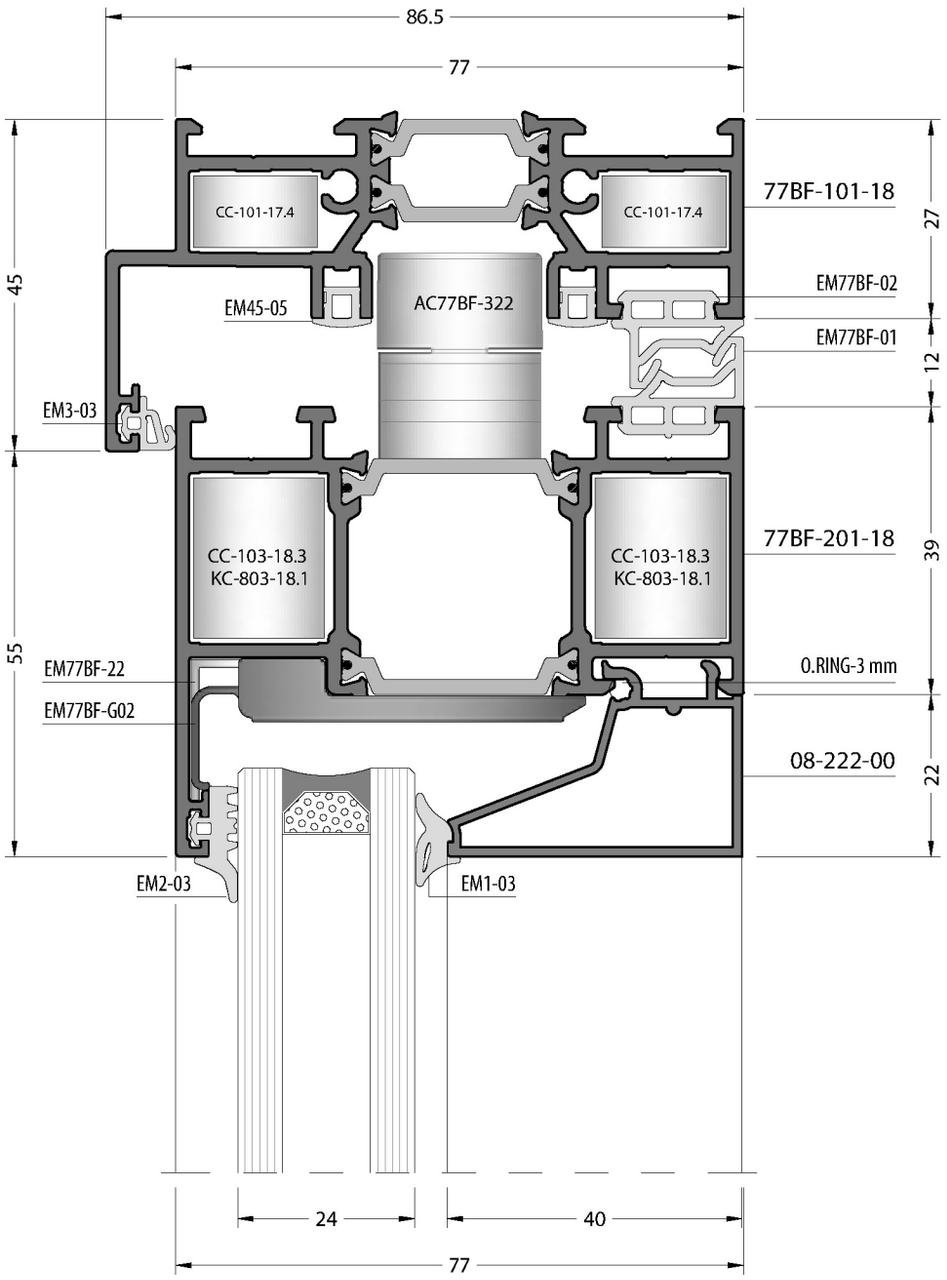
86.5
77
45
55
CC-101-17.4
CC-101-17.4
AC77BF-322
EM45-05
EM3-03
CC-103-18.3
KC-803-18.1
CC-103-18.3
KC-803-18.1
EM77BF-22
EM77BF-G02
EM2-03
EM1-03
77BF-101-18
EM77BF-02
EM77BF-01
77BF-201-18
O.RING-3 mm
08-222-00
27
12
39
22
24
40
77

10-A

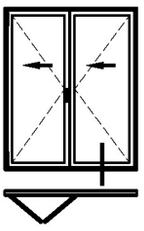

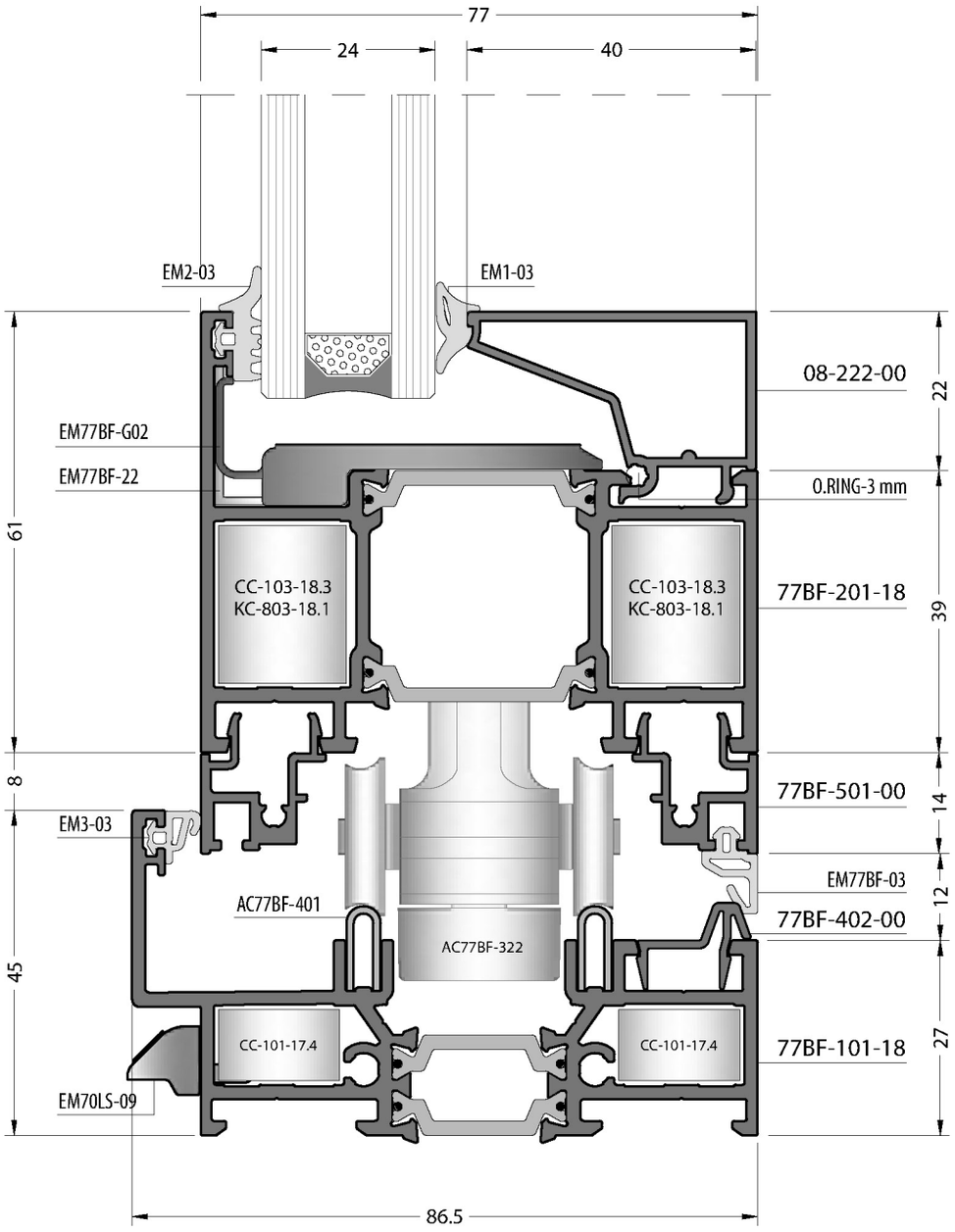
77
24
40
EM2-03
EM1-03
08-222-00
22
EM77BF-G02
EM77BF-22
O.RING-3 mm
61
CC-103-18.3
KC-803-18.1
CC-103-18.3
KC-803-18.1
77BF-201-18
39
8
77BF-501-00
14
EM3-03
EM77BF-03
12
AC77BF-401
77BF-402-00
AC77BF-322
45
CC-101-17.4
CC-101-17.4
77BF-101-18
27
EM70LS-09
86.5

Frame Connection 45°/ Kasa Birleşim 45°

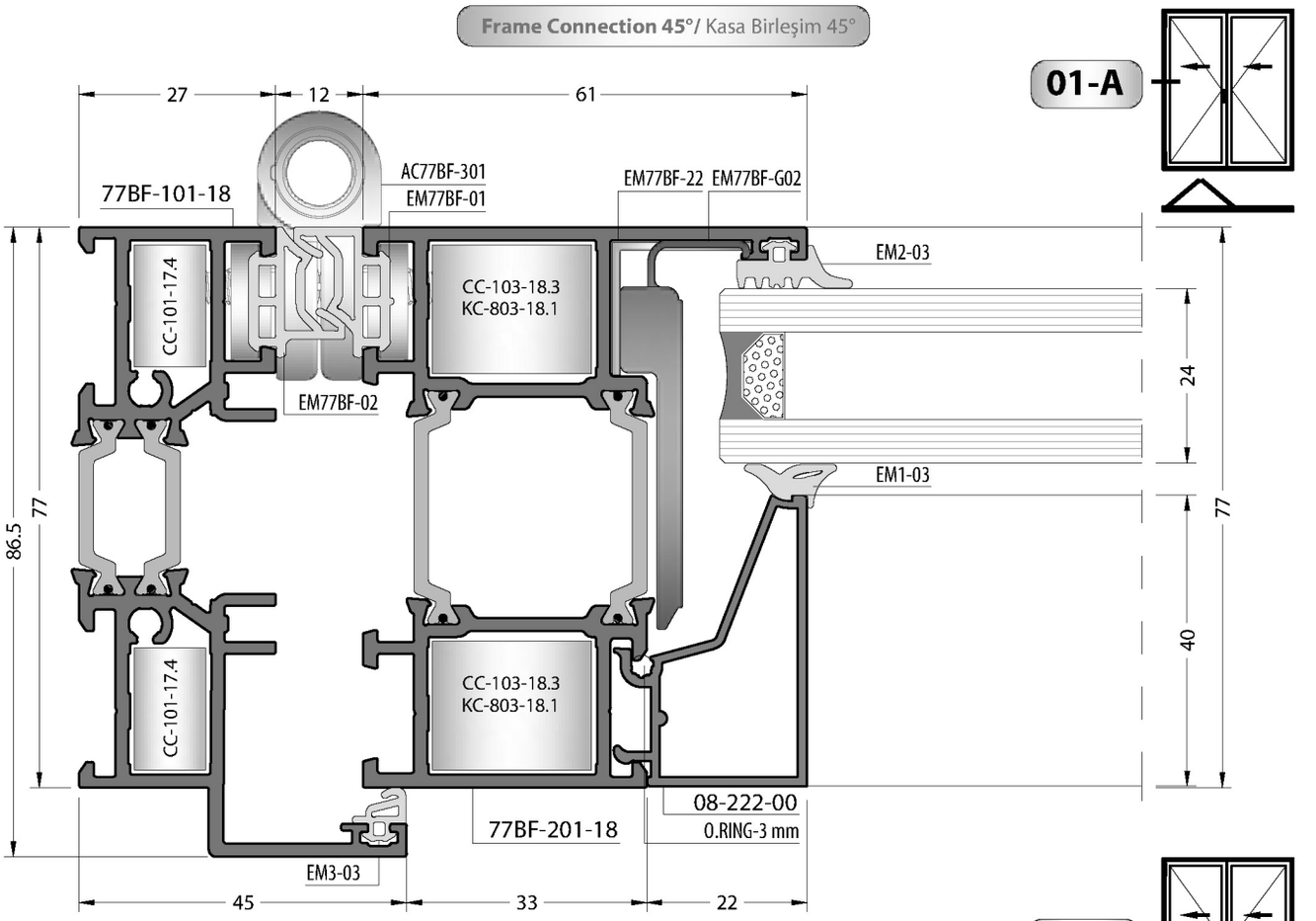

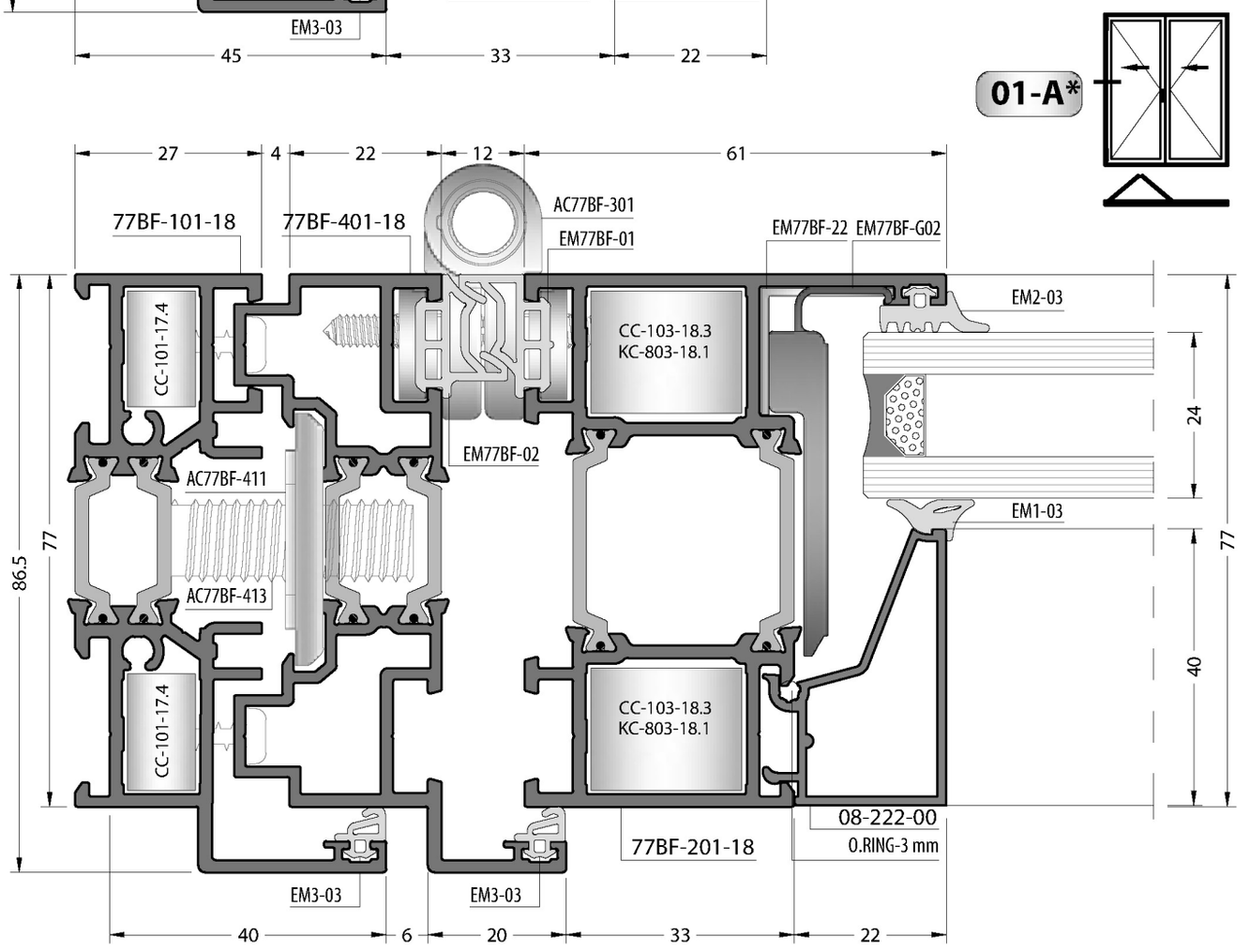

Frame Connection 45°/ Kasa Birleşim 45°

02-A

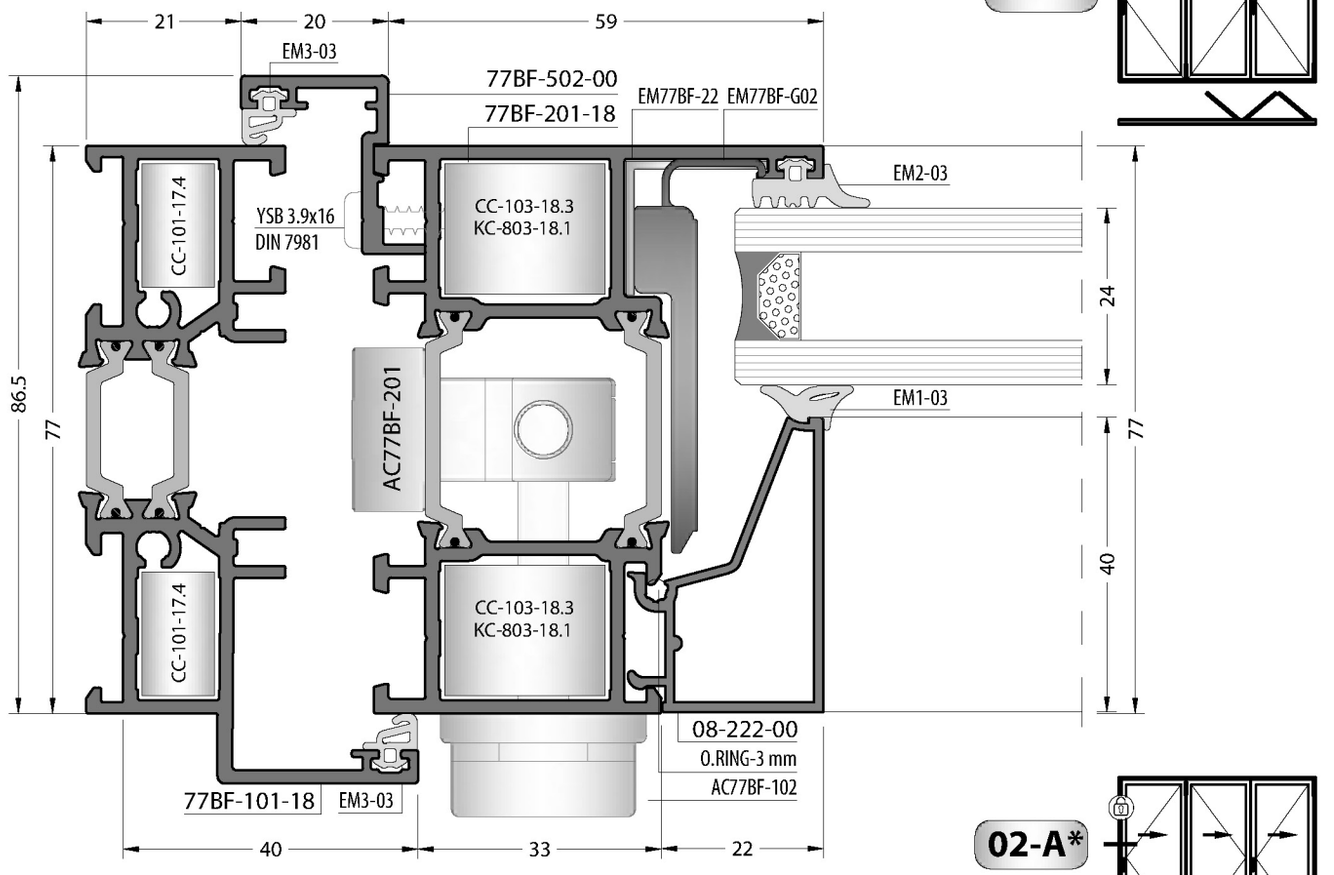

02-A*

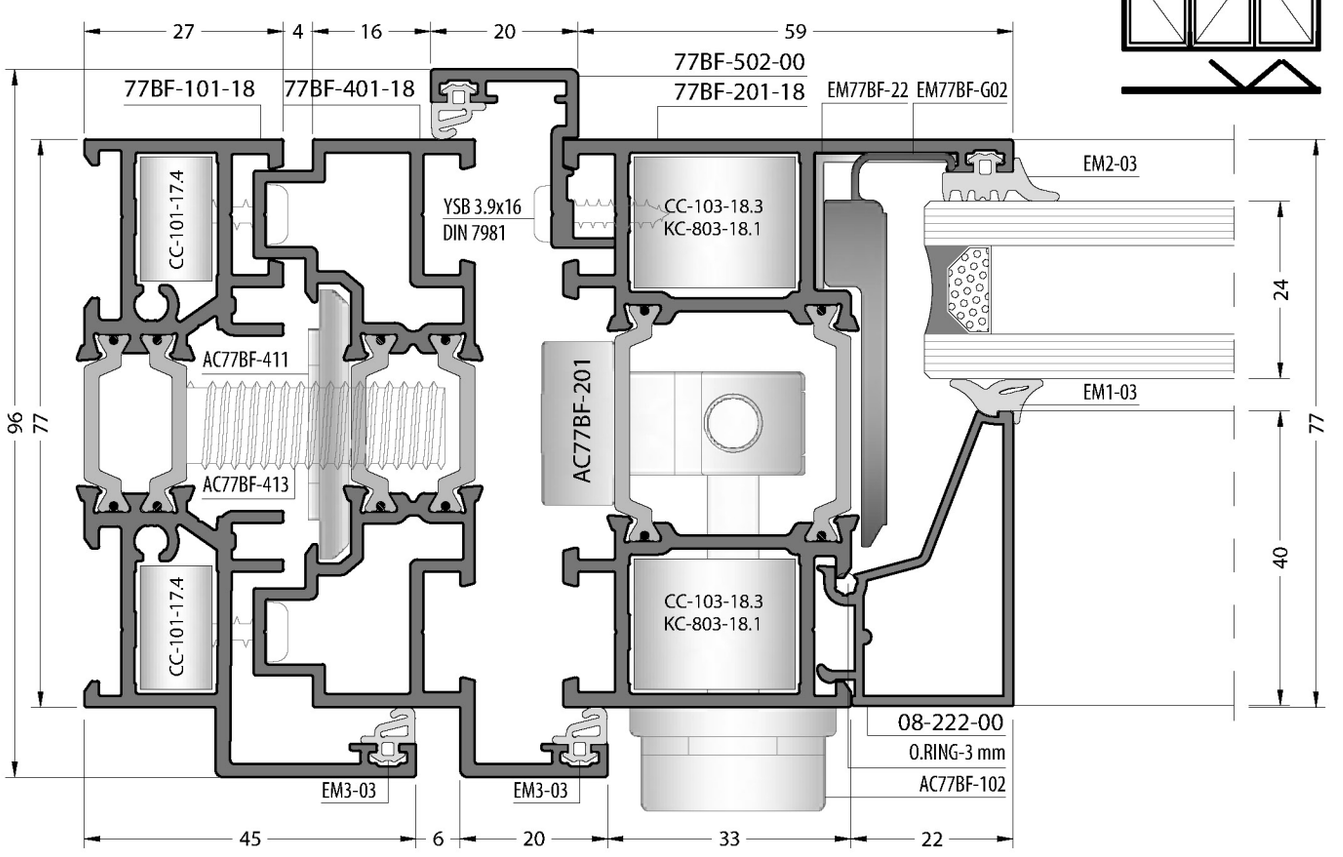

Frame Connection 45°/ Kasa Birleşim 45°

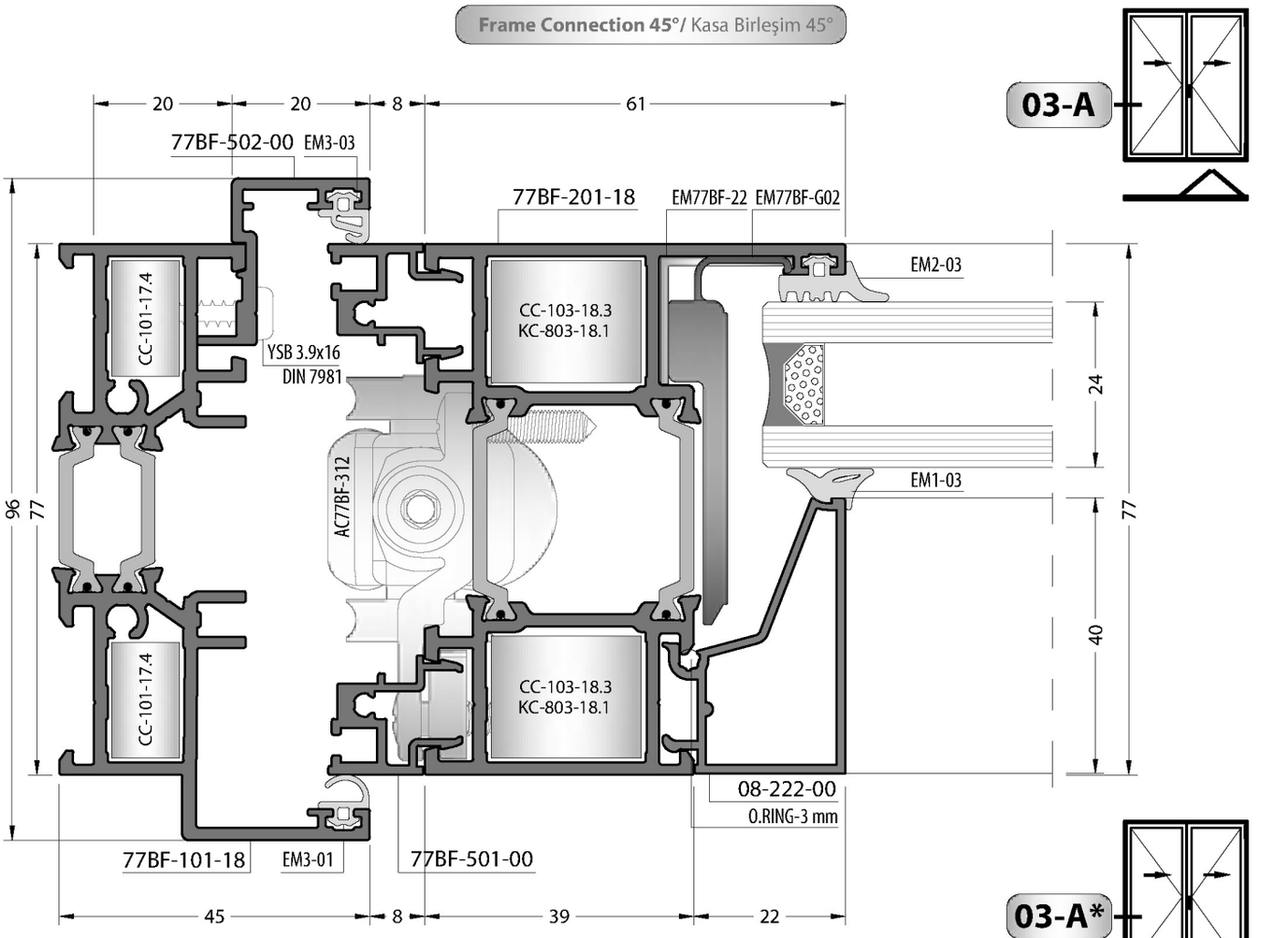

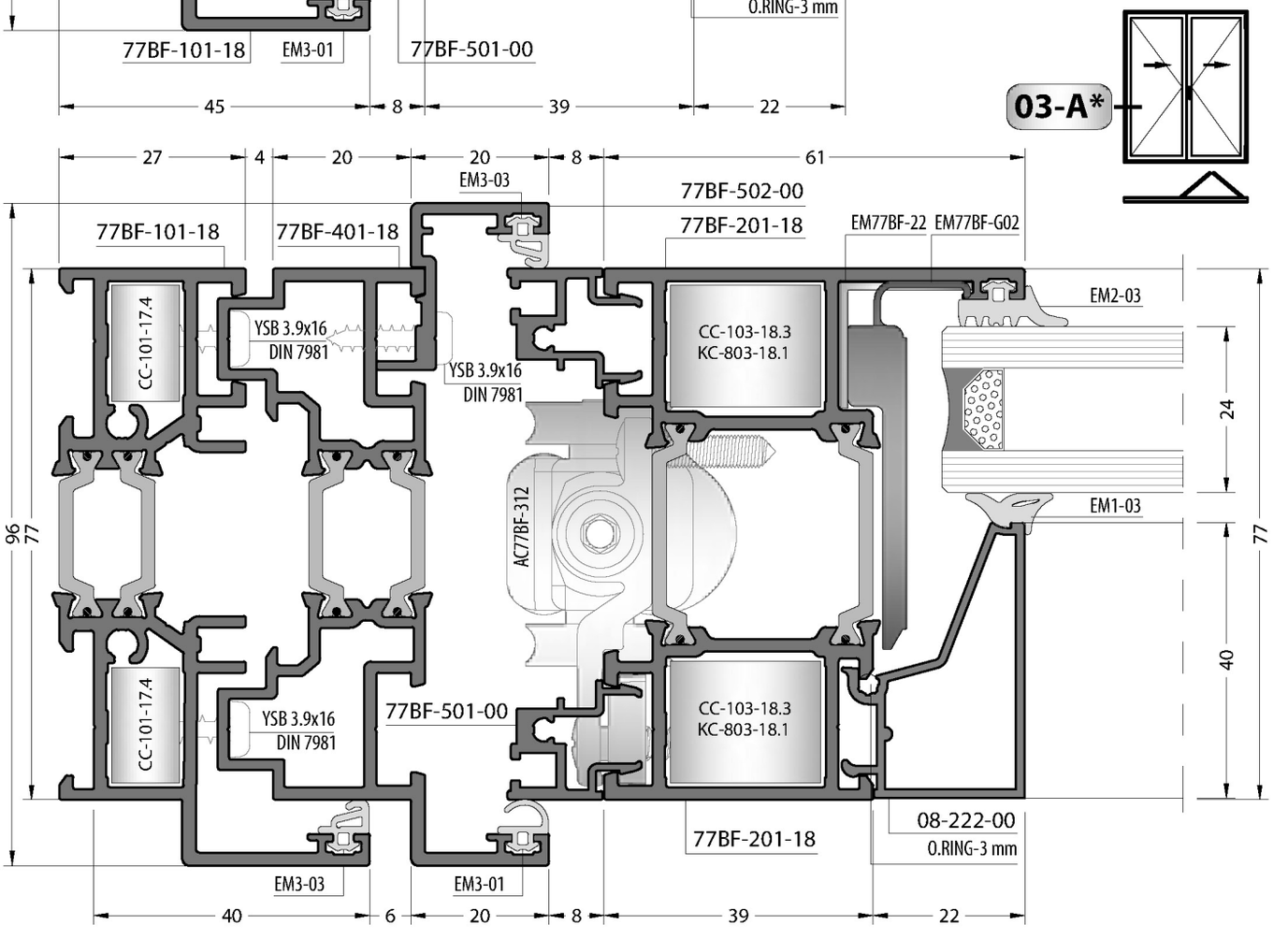

10-A

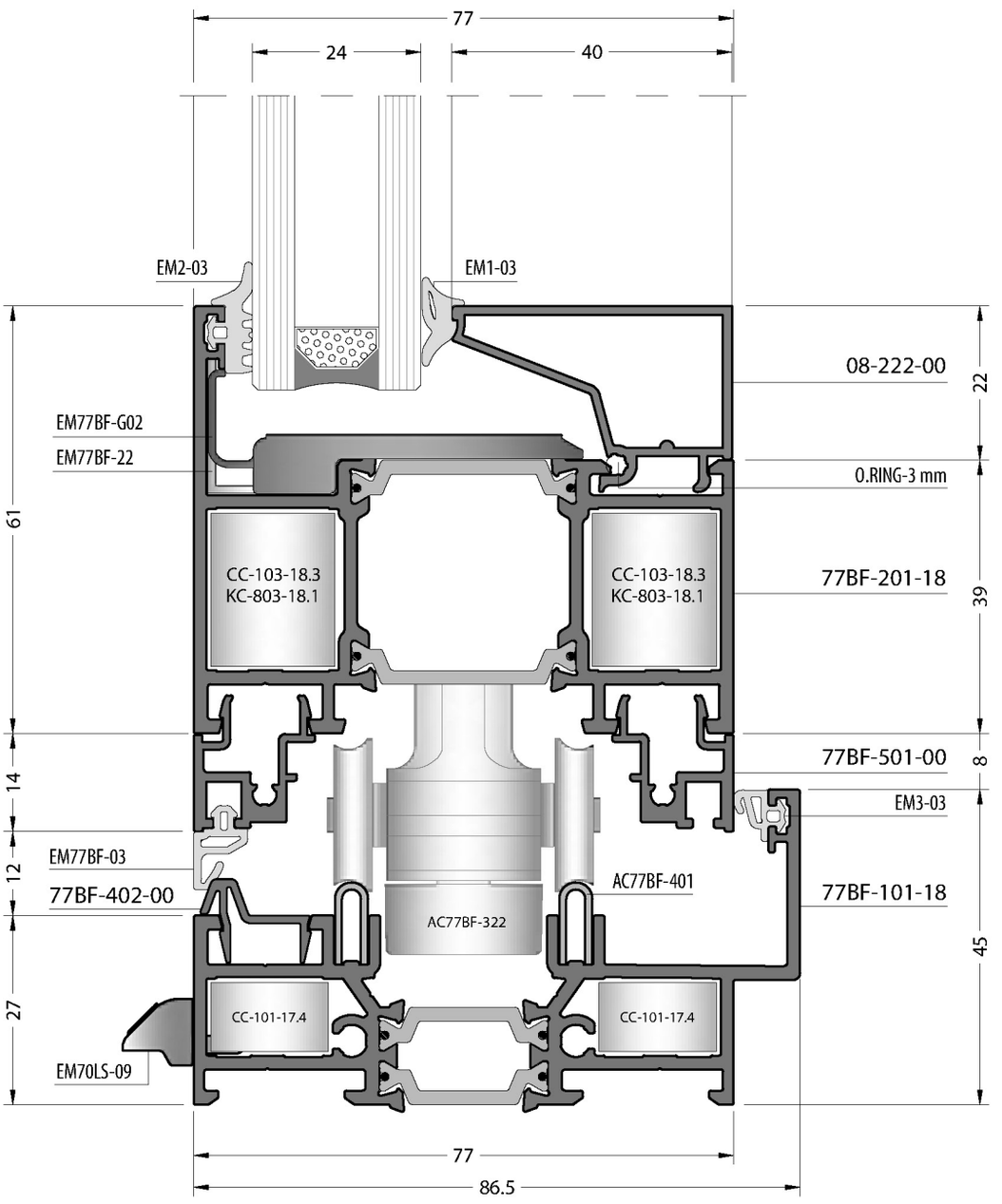
77
24
40
EM2-03
EM1-03
08-222-00
EM77BF-G02
EM77BF-22
0.RING-3 mm
CC-103-18.3
KC-803-18.1
CC-103-18.3
KC-803-18.1
77BF-201-18
77BF-501-00
EM3-03
EM77BF-03
77BF-402-00
AC77BF-401
77BF-101-18
AC77BF-322
CC-101-17.4
CC-101-17.4
EM70LS-09
61
14
12
27
22
39
8
45
77
86.5

GLAZING TABLES
CAM TABLOLARI

GLAZING TABLES / CAM TABLOSU

SAFETY GLAZING BEAD / GÜVENLİKLİ CAM ÇITASI

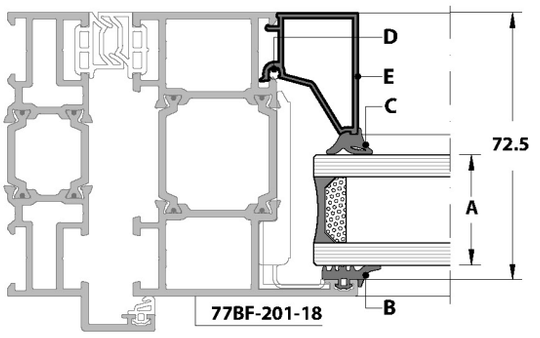

STANDARD GLAZING BEAD / STANDART CAM ÇITASI

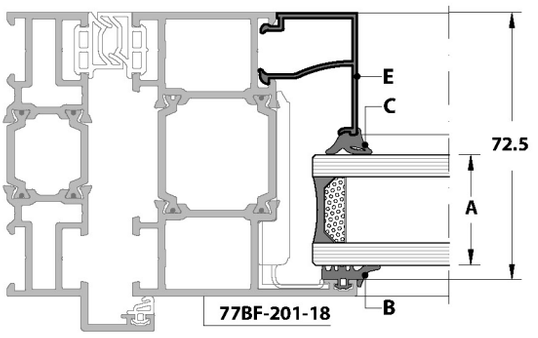

A	B	C	D	E	E
GLAZING THICKNESS CAM KALINLIĞI	OUTSIDE GLASS GASKET DIŞ CAM FİTİLİ	INSIDE GLASS GASKET İÇ CAM FİTİLİ	SAFETY GLAZING BEAD GÜVENLİKLİ CAM ÇITASI		STANDARD GLAZING BEAD STANDART CAM ÇITASI
14 mm	EM2-03	EM1-05	O.RING-3 mm	08-224-00	-
15 mm		EM1-04			
16 mm		EM1-03			
17 mm	EM2-03	EM1-05	O.RING-3 mm	08-223-00	-
18 mm		EM1-04			
19 mm		EM1-03			
20 mm	EM2-03	EM1-05	O.RING-3 mm	08-221-00	08-121-00
21 mm		EM1-04			
22 mm		EM1-03			
22 mm	EM2-03	EM1-05	O.RING-3 mm	08-222-00	08-122-00
23 mm		EM1-04			
24 mm		EM1-03			
25 mm	EM2-03	EM1-05	O.RING-3 mm	08-216-00	08-116-00
26 mm		EM1-04			
27 mm		EM1-03			
28 mm	EM2-03	EM1-06	O.RING-3 mm	08-215-00	08-115-00
29 mm	EM2-03	EM1-05	O.RING-3 mm	08-215-00	08-115-00
30 mm		EM1-04			
31 mm		EM1-03			

GLAZING TABLES / CAM TABLOSU

SAFETY GLAZING BEAD / GÜVENLİKLİ CAM ÇITASI

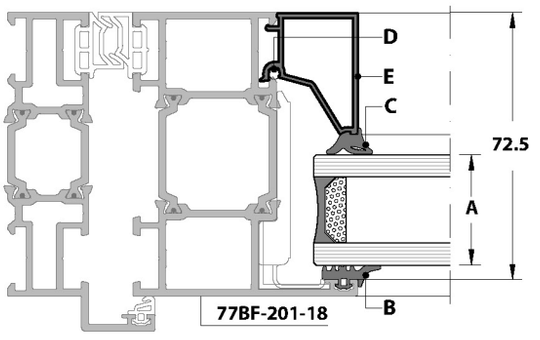

STANDARD GLAZING BEAD / STANDART CAM ÇITASI

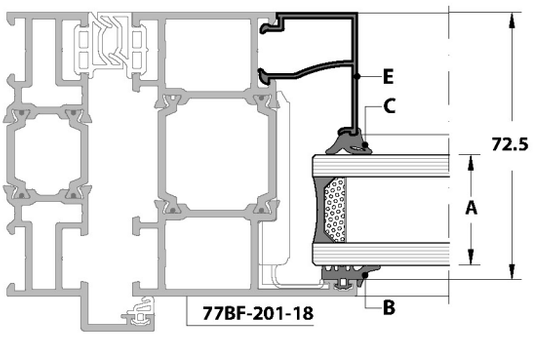

A	B	C	D	E	E
GLAZING THICKNESS CAM KALINLIĞI	OUTSIDE GLASS GASKET DIŞ CAM FİTİLİ	INSIDE GLASS GASKET İÇ CAM FİTİLİ	SAFETY GLAZING BEAD GÜVENLİKLİ CAM ÇITASI		STANDARD GLAZING BEAD STANDART CAM ÇITASI
32 mm	EM2-03	EM1-05	O.RING-3 mm	08-217-00	08-117-00
33 mm		EM1-04			
34 mm		EM1-03			
34 mm	EM2-03	EM1-05	O.RING-3 mm	08-213-00	08-113-00
35 mm		EM1-04			
36 mm		EM1-03			
37 mm	EM2-03	EM1-05	O.RING-3 mm	08-212-00	08-112-00
38 mm		EM1-04			
39 mm		EM1-03			
40 mm	EM2-03	EM1-05	O.RING-3 mm	08-209-00	08-109-00
41 mm		EM1-04			
42 mm		EM1-03			
43 mm	EM2-03	EM1-05	O.RING-3 mm	08-208-00	08-108-00
44 mm		EM1-04			
45 mm		EM1-03			
45 mm	EM2-03	EM1-05	O.RING-3 mm	08-207-00	08-107-00
46 mm		EM1-04			
47 mm		EM1-03			
48 mm	EM2-03	EM1-05	O.RING-3 mm	08-205-00	08-105-00
49 mm		EM1-04			
50 mm		EM1-03			

GLAZING TABLES / CAM TABLOSU

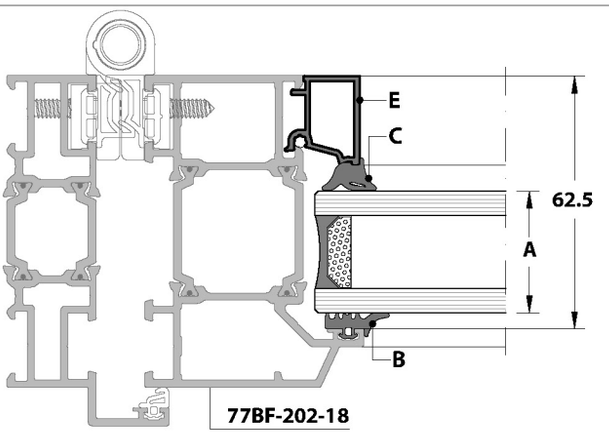

A	B	C	D	E
GLAZING THICKNESS CAM KALINLIĞI	OUTSIDE GLASS GASKET DIŞ CAM FİTİLİ	INSIDE GLASS GASKET İÇ CAM FİTİLİ	SAFETY GLAZING BEAD GÜVENLİKLİ CAM ÇITASI	
23 mm	EM2-03	EM1-05	O.RING-3 mm	08-314-00
24 mm		EM1-04		
25 mm		EM1-03		
27 mm	EM2-03	EM1-05	O.RING-3 mm	08-312-00
28 mm		EM1-04		
29 mm		EM1-03		
30 mm	EM2-03	EM1-05	O.RING-3 mm	08-309-00
31 mm		EM1-04		
32 mm		EM1-03		
33 mm	EM2-03	EM1-05	O.RING-3 mm	08-308-00
34 mm		EM1-04		
35 mm		EM1-03		

ACCESSORIES
AKSESUARLAR

GASKETS / FİTİLLER

CODE / KOD	DRAWING / ÇİZİM	APPLICATION UYGULAMA	DESCRIPTION AÇIKLAMA	MATERIAL MALZEME	WEIGHT AĞIRLIK Kg/m	IN ONE PACKAGE PAKET MİKTARI
EM1-03		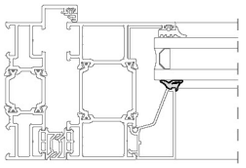	Glazing Gasket Inside İç Cam Fitili	EPDM	0.050	300 m
EM1-04		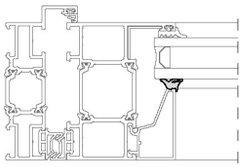	Glazing Gasket Inside İç Cam Fitili	EPDM	0.065	230 m
EM1-05		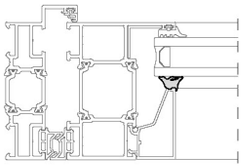	Glazing Gasket Inside İç Cam Fitili	EPDM	0.071	210 m
EM1-06		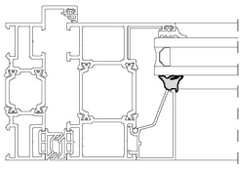	Glazing Gasket Inside İç Cam Fitili	EPDM	0	0
EM2-03		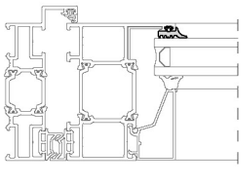	Glazing Gasket Outside Dış Cam Fitili	EPDM	0.069	215 m
EM3-01		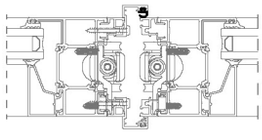	Acoustical Gasket Bini Fitili	EPDM	0.032	465 m
EM3-03		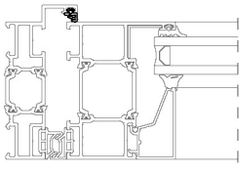	Acoustical Gasket Bini Fitili	EPDM	0.031	400 m
EM77BF-03		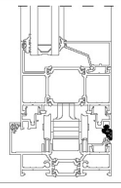	Acoustical Gasket Bini Fitili	EPDM	0.044	340 m
EM45-05		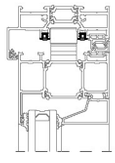	Frame Gasket Kasa Fitili	EPDM	0.000	550 m

GASKETS / FİTİLLER

CODE / KOD	DRAWING / ÇİZİM	APPLICATION UYGULAMA	DESCRIPTION AÇIKLAMA	MATERIAL MALZEME	WEIGHT AĞIRLIK Kg/m	IN ONE PACKAGE PAKET MİKTARI
O.RING-3 mm	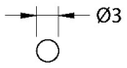	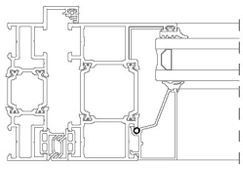	Foam Gasket Sünger Fitil	EPDM	0.005	100 m
EM77BF-01	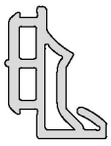	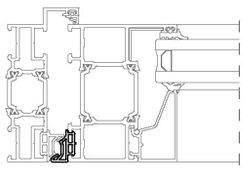	Isolation Gasket İzolasyon Fitili	EPDM	0.105	140 m
EM77BF-02		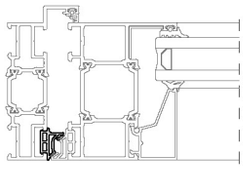	Isolation Gasket İzolasyon Fitili	EPDM	0.105	140 m

BRUSH / FIRÇA

CODE / KOD	DRAWING / ÇİZİM	APPLICATION UYGULAMA	DESCRIPTION AÇIKLAMA	MATERIAL MALZEME	WEIGHT AĞIRLIK Kg/m	IN ONE PACKAGE PAKET MİKTARI
AC77BF-421		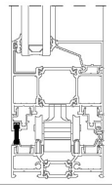	Brush / Fırça Metal Gövdeli Kıl Fırça	-	-	0cm / 0 cm

PRESS CORNER JOINTS / PRES KÖŞE BAĞLANTILAR

CODE / KOD	DRAWING / ÇİZİM	APPLICATION / UYGULAMA	PROFILE CODE PROFİL KOD	CUTTING SIZE KESİM ÖLÇÜSÜ	APPLICATION PROFILES ÇALIŞTIĞI PROFİLLER
CC-101-17.4		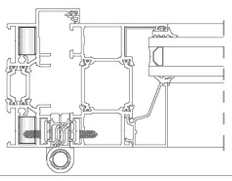	09-101-00	17.4 mm	77BF-101-18
CC-103-18.3		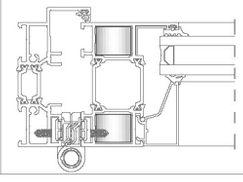	09-103-00	18.3 mm	77BF-201-18

MECHANICAL CORNER JOINTS / MEKANİK KÖŞE BAĞLANTILAR

CODE / KOD	DRAWING / ÇİZİM	APPLICATION / UYGULAMA	PROFILE CODE PROFİL KOD	CUTTING SIZE KESİM ÖLÇÜSÜ	APPLICATION PROFILES ÇALIŞTIĞI PROFİLLER
KC-801-17.2		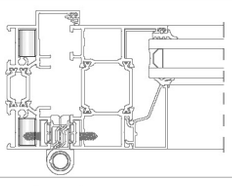	09-801-00	17.2 mm	77BF-101-18
KC-803-18.1		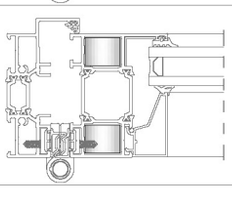	09-803-00	18.1 mm	77BF-201-18

Connection Items / Bağlantı Ürünleri

CODE / KOD	DRAWING / ÇİZİM	APPLICATION / UYGULAMA	PROFILE CODE PROFİL KOD	CUTTING SIZE KESİM ÖLÇÜSÜ	APPLICATION PROFILES ÇALIŞTIĞI PROFİLLER
CA77BF-103	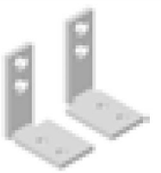	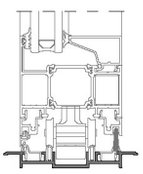	**FRAME CORNER JOINT** KASA KÖŞE BAĞLANTI	-	77BF-103-00
CA77BF-121		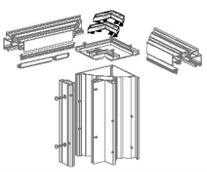	KÖŞE DÖNÜŞ KASA BAĞLANTI	-	77BF-111-18
CA77BF-151-01	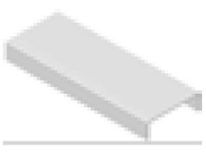	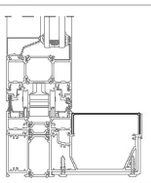	OLU SACI	-	77BF-151-00
CA77BF-151-02	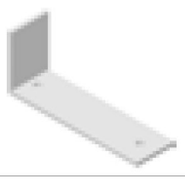	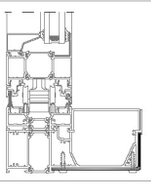	-	-	77BF-151-00
CA77BF-151-03		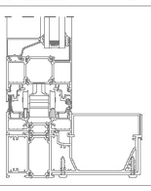	OLUK KAPAĞI	-	77BF-151-00

ACCESSORIES / AKSESUARLAR

PACKAGE CODE PAKET KODU	DRAWING ÇİZİM	DESCRIPTION AÇIKLAMA
AC77BF-101		**MINIMAL HANDLE (INWARD OPENING)** KOL (İÇE AÇILIR)
AC77BF-102		**MINIMAL HANDLE (OUTWARD OPENING)** KOL (DIŞA AÇILIR)
AC77BF-103		**DOUBLE HANDLE** MASTER KOL
AC77BF-111 **INWARD** İÇE AÇILIR		**PULL HANDLE** ÇEKME KOL
AC77BF-112 **OUTWARD** DIŞA AÇILIR		**HINGE WITH THREADED PLATE** ÇEKME KOL
AC77BF-201		**TWO-WAY MOVEMENT** KOL İLETİŞİM EKIPMANI
AC77BF-202		**MULTIPOINT CENTER LOCK TWO WAY** KİLİT
AC77BF-203		**3 LOCKING POINT VERTICAL LOCK** 3 NOKTADAN KİLİTLEMELİ İSPANYOLET
Door.Cyl.100		**DOOR CYLINDER** 100 mm SİLİNDİR 100 mm
AC77BF-204		**UPDOWN CONNECTION FOR TRIPLE LOCK** 3 NOKTADAN KİLİTLİ İSPANYOLET İÇİN GİJON BAĞLANTI APARATI
AC77BF-211		**LOCKING ROD KIT** KILITLEME TIJ TAKIMI
EM77BF-281	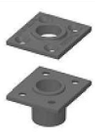	**SASH GUIDE SET** KANAT KILAVUZ YUVASI

PACKAGE CODE PAKET KODU	DRAWING ÇİZİM	DESCRIPTION AÇIKLAMA
AC77BF-221		**ADJUSTABLE COUNTERPLATE** KILIT KARŞILIĞI
AC77BF-222		**3 LOCKING POINT ADJUSTABLE COUNTERPLATE** 3 NOKTADAN KİLİTLEMELİ KILIT KARŞILIĞI
AC77BF-231		**LEVER BOLT** FİŞEK SÜRGÜ
AC77BF-232		**STRIKER** FIŞEK KARŞILIK
AC77BF-301		**HINGE WITH THREADED PLATE** KATLANIR MENTEŞESI
AC77BF-311		**LOWER ROLLER (ONE WHELL)** ALT RULMAN (TEK TEKERLİ)
AC77BF-312		**UPPER ROLLER (ONE WHELL)** ÜST RULMAN (TEK TEKERLİ)
AC77BF-321		**LOWER ROLLER (TWO WHELL)** ALT RULMAN (ÇİFT TEKERLİ)
AC77BF-322		**UPPER ROLLER (TWO WHELL)** ÜST RULMAN (ÇİFT TEKERLİ)
AC77BF-401		**STAINLESS RAIL** PASLANMAZ RAY (3,25 M)
AC77BF-411		**FRAME ADJUSTING PLATE** KASA AYAR PARÇASI
AC77BF-412		SETSKUR SETSKUR

ACCESSORIES / AKSESUARLAR

PACKAGE CODE PAKET KODU	DRAWING ÇİZİM	DESCRIPTION AÇIKLAMA
AC77BF-413		SETSKUR SETSKUR
AC77BF-431		**SASH HOLDER** KANAT TUTUCU
EM77BF-221		**LOCK AND STIKER ADAPTER** KİLİT VE KARŞILIK ADAPTÖRÜ
EM77BF-511		**DROPPER CAP** DAMLALIK KAPAĞI
EM77BF-C01	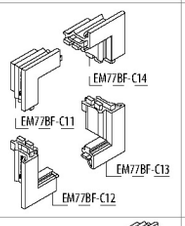	**EPDM CORNER ENJECTION** EPDM KÖŞE ENJEKSİYON
EM77BF-C02	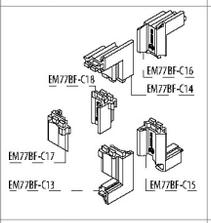	**EPDM CORNER ENJECTION** EPDM KÖŞE ENJEKSİYON
EM77BF-23		**FRAME JOINT INSULATION PLASTIC** KASA BİRLEŞİM İZOLASYON PLASTİĞİ
EM77BF-501A		**HORIZONTAL ADAPTOR PLASTIC CAP** YATAY ADAPTÖR PLASTİK KAPAK

PACKAGE CODE PAKET KODU	DRAWING ÇİZİM	DESCRIPTION AÇIKLAMA
EM77BF-501B		**VERTICAL ADAPTOR PLASTIC CAP** DÜŞEY ADAPTÖR PLASTİK KAPAK
EM77BF-502		**ADAPTOR PLASTIC CAP** BİNİ ADAPTÖR PLASTİK KAPAK
EM77BF-91		**ROD GUIDE PLASTIC** GİJON KILAVUZ PLASTİĞİ
EM77BF-G02		**SASH WEDGE** KANAT CAM TAKOZU
EM77BF-22		**PVC CORNER ALIGNMENT** PVC KÖŞE GÖNYE
EM77BF-515		**CORNER CAP SET** KÖŞE DÖNÜŞ KAPAK TAKIMI
EM70LS-09		**DRANAIGE CAP** TAHLİYE KAPAĞI

AKSESUAR CHART / AKSESUAR LİSTESİ

77BF KATLANIR KAYAR SİSTEM

SYSTEM CODE / SİSTEM KODU	PICTURE / RESİM	PACKAGE / PAKET	DESCRIPTION / TANIM	OPENING / AÇILIM	2	3						4									5									6																			7												
					2+0	2+1			3+0			2+2	3+1						4+0	3+2			4+1			5+0			3+3							4+2	5+1							6+0	4+3			5+2			6+1			7+0												
					3A	07-A	07-B	07-C	02-A	02-B	02-C	8A	06-A1	06-A2	06-B1	06-B2	06-C1	06-C2	3A	07-A	07-B	07-C	07-A	07-B	07-C	02-A	02-B	02-C	06-A1	06-A2	06-B1	06-B2	06-C1	06-C2	8A	06-A1	06-A2	06-B1	06-B2	06-C1	06-C2	3A	07-A	07-B	07-C	07-A	07-B	07-C	07-A	07-B	07-C	02-A	02-B	02-C	07-A	07-B	07-C	07-A	07-B	07-C	07-A	07-B	07-C	02-A	02-B	02-C
AC77BF-101		PIECE / ADET	MINIMAL HANDLE (INWARD OPENING) KOL İÇE AÇILIR	INWARD İÇE AÇILIR	1	2	1		2	1		2	3	2	2	1	2	1	2	3	2		3	2		3	2		4	3	3	2	3	2	3	4	3	3	2	3	2	3	4	3		4	3		4	3		4	3											
AC77BF-102		PIECE / ADET	MINIMAL HANDLE (OUTWARD OPENING) KOL DIŞA AÇILIR	OUTWARD DIŞA AÇILIR																																																																
AC77BF-103		PIECE / ADET	DOUBLE HANDLE MASTER KOL		-	-	1		-	1		-	-	-	1	1	1	1	-	-	1		-	1		-	1		-	-	1	1	1	1	-	-	-	1	1	1	1	-	-	1		-	1		-	1		-	1											
AC77BF-111		PIECE / ADET	PULL HANDLE ÇEKME KOL	INWARD İÇE AÇILIR	1	1			1			2	1						2	2			2			2			2							3	2							3	3			3			3			3											
AC77BF-112		PIECE / ADET	HINGE WITH THREADED PLATE ÇEKME KOL	OUTWARD DIŞA AÇILIR																																																														
AC77BF-201		PIECE / ADET	TWO-WAY MOVEMENT KOL İLETİŞİM EKİPMANI		1	2	1		2	1		2	3	2	2	1	2	1	2	3	2		3	2		3	2		4	3	3	2	3	2	3	4	3	3	2	3	2	3	4	3		4	3		4	3		4	3											
AC77BF-202		PIECE / ADET	MULTI POINT LOCKING TWO-WAYS MOVEMENTS, INTERNAL RODS KİLİT		-	-	1	-	-	1	-	-	-	-	1	1	-	-	-	-	1	-	-	1	-	-	1	-	-	-	1	1	-	-	-	-	-	-	1	1	-	-	-	-	1	-	-	1	-	-	1	-	-	1	-	-							
AC77BF-203		PIECE / ADET	3 LOCKING POINT VERTICAL LOCK 3 NOKTADAN KİLİTLEMELİ DİKEY KİLİT		-	-	-	1	-	0	1	0	0	0	0	0	1	1	0	0	0	1	0	0	1	0	0	1	0	0	0	0	1	1	0	0	0	0	0	1	1	0	0	0	1	0	0	1	0	0	1	0	0	1							
AC77BF-204		SET / TAKIM	UP DOWN CONNECTION FOR TRIPLE LOCK 3 NOKTADAN KİLİTLİ İSTİFLEMOLİT İÇİN ÜSTÜN BAĞLANTI APARATI		-	-	-	1	-	0	1	0	0	0	0	0	1	1	0	0	0	1	0	0	1	0	0	1	0	0	0	0	1	1	0	0	0	0	0	1	1	0	0	0	1	0	0	1	0	0	1	0	0	1							
Door.Cyl.100		PIECE / ADET	DOOR CYLINDER 100 mm SİLİNDİR 100 mm		-	-	1	1	-	1	1	0	0	0	1	1	1	1	0	0	1	1	0	1	1	0	1	1	0	0	1	1	1	1	0	0	0	1	1	1	1	0	0	1	1	0	1	1	0	1	1	0	1	1							
AC77BF-211		SET / TAKIM	LOCKING ROD KIT KİLİTLEME TİJ TAKIMI		1	2	2	2	2	2	2	2	3	2	3	2	3	2	2	3	3	3	3	3	3	3	3	3	4	3	4	3	4	3	3	4	3	4	3	4	3	3	4	4	4	4	4	4	4	4	4	4	4	4							
EM77BF-281		SET / TAKIM	SASH GUIDE SET KANAT KILAVUZ KAVASI		1	2	2	2	2	2	2	2	3	2	3	2	3	2	2	3	3	3	3	3	3	3	3	3	4	3	4	3	4	3	3	4	3	4	3	4	3	3	4	4	4	4	4	4	4	4	4	4	4	4							
AC77BF-221		PIECE / ADET	ADJUSTABLE COUNTERPLATE KİLİT KARŞILIĞI		-	-	1	1	-	1	1	-	-	-	1	1	1	1	-	-	1	1	-	1	1	1	1	0	0	0	1	1	1	1	0	0	0	0	1	1	1	1	0	0	1	1	0	1	1	0	1	1	0	1	1							
AC77BF-222		PIECE / ADET	3 LOCKING POINT ADJUSTABLE COUNTERPLATE 3 NOKTADAN KİLİTLEMELİ KİLİT KARŞILIĞI		-	-	-	2	-	-	2	-	-	-	-	-	2	2	-	-	-	2	-	-	2	2	-	-	2	-	-	-	-	2	2	-	-	-	-	2	2	-	-	2	-	-	2	-	-	2	-	-	2							
EM77BF-221		SET / TAKIM	LOCK AND STIKER ADAPTER KİLİT VE KARŞILIK ADAPTÖRÜ		-	-	2	3	-	2	3	-	-	-	2	2	3	3	-	-	2	3	-	2	3	-	2	3	-	-	2	2	3	3	-	-	-	2	2	3	3	-	-	2	3	-	2	3	-	2	3	-	2	3							
AC77BF-231		PIECE / ADET	LEVER BOLT PİRİK BÜRGÜ		0	0	0	0	0	0	0	0	0	2	0	2	0	2	0	0	0	0	0	0	0	0	0	0	0	2	0	2	0	2	0	0	2	0	2	0	2	0	0	0	0	0	0	0	0	0	0	0	0	0							
AC77BF-232		PIECE / ADET	STRIKER PİRİK KARŞILIK		0	0	0	0	0	0	0	0	0	2	0	2	0	2	0	0	0	0	0	0	0	0	0	0	0	2	0	2	0	2	0	0	2	0	2	0	2	0	0	0	0	0	0	0	0	0	0	0	0	0							
AC77BF-301		PIECE / ADET	HINGE WITH THREADED PLATE KATLANIR MENTEŞELİ 1 HATTA 2 MENTEŞE KANAT ≤2200	INWARD İÇE AÇILIR	6	9			7			12	10						10	13			13			11			14							16	14							14	17			17			17			15											
				OUTWARD DIŞA AÇILIR	5	8			6			10	9						8	11			11			9			12							13	12							11	14			14			14			12											
			HINGE WITH THREADED PLATE KATLANIR MENTEŞELİ 1 HATTA 2 MENTEŞE 2200< KANAT ≤2900	INWARD İÇE AÇILIR	8	12			10			16	14						14	18			18			16			20							22	20							20	24			24			24			22											
				OUTWARD DIŞA AÇILIR	7	11			9			14	13						12	16			16			14			18							19	18							17	21			21			21			19											
			HINGE WITH THREADED PLATE KATLANIR MENTEŞELİ 1 HATTA 3 MENTEŞE 2900< KANAT ≤3500	INWARD İÇE AÇILIR	10	15			13			20	18						18	23			23			21			26							28	26							26	31			31			31			29											
				OUTWARD DIŞA AÇILIR	9	14			12			18	17						16	21			21			19			24							25	24							23	28			28			28			26											
AC77BF-311		PIECE / ADET	LOWER ROLLER (ONE WHEEL) ALT RULMAN (TEK TEKERLEK)		1	1			0			2	0						1	1			1			0			0							2	0							1	1			1			1			0											
AC77BF-312		PIECE / ADET	UPPER ROLLER (ONE WHEEL) ÜST RULMAN (TEK TEKERLEK)		1	1			0			2	0						1	1			1			0			0							2	0							1	1			1			1			0											
AC77BF-321		PIECE / ADET	LOWER ROLLER (TWO WHEEL) ALT RULMAN (ÇİFT TEKERLEK		0	0			1			0	1						1	1			1			2			2							1	2							2	2			2			2			3											
AC77BF-322		PIECE / ADET	UPPER ROLLER (TWO WHEEL) ÜST RULMAN (ÇİFT TEKERLEK		0	0			1			0	1						1	1			1			2			2							1	2							2	2			2			2			3											
AC77BF-401		PIECE / ADET	STAINLESS RAIL PASLANMAZ RAY (2,5 M)		(2*FL)/3,25																																																															
AC77BF-411		PIECE / ADET	FRAME ADJUSTING PLATE KASA AYAR PARÇASI	77BF-401-18 When used/ Kullanildiginda	(((FH-250)/200) + 1) * 2																																																											
AC77BF-412		SET / TAKIM	SET KASA SETTAKIM	77BF-401-18 When used Kullanildiginda	90° FRAME COMBINATION KASA BİRLEŞİMİ	(((FH-250)/200) + 1) * 2																																																											
AC77BF-413		SET / TAKIM	SET KASA SETTAKIM	77BF-401-18 When used Kullanildiginda	45° FRAME COMBINATION KASA BİRLEŞİMİ	(((FH-250)/200) + 1) * 2																																																										
AC77BF-431		SET / TAKIM	SASH HOLDER KANAT TUTUCU		0	0			1			0	1						0	1			0			1			2							0	1							0	1			1			0			1											
EM77BF-511		SET / TAKIM	DROPPER CAP DAMLALIK KAPAĞI	OUTWARD DIŞA AÇILIR	1	1			1			1	1						1	1			1			1			1							1	1							1	1			1			1			1											
EM77BF-C01		SET / TAKIM	EPDM CORNER INJECTION EPDM KÖŞE ENJEKSİYON		1	1			1			1	1						1	1			1			1			1							1	1							1	1			1			1			1											
EM77BF-C02		SET / TAKIM	EPDM CORNER INJECTION EPDM KÖŞE ENJEKSİYON		1	1			2			2	2						3	3			3			4			4							4	4							5	5			5			5			6											
EM77BF-23		SET / TAKIM	FRAME JOINT INSULATION PLASTIC KASA BİRLEŞİM İZOLASYON PLASTİĞİ	90° FRAME COMBINATION KASA BİRLEŞİMİ	2 PIECE / ADET																																																													
					1 PIECE / ADET (77BF-103-00 IF THE SAFE IS USED / KASA KULLANILIRSA)																																																													
EM77BF-501A		SET / TAKIM	HORIZONTAL ADAPTOR PLASTIC CAP YATAY ADAPTÖR PLASTİK KAPAK		3	5	4	6	5			6	8	6					7	9	8	9	8	10	9		12	10		10	12	10					11	13	12	13	12	13	12	14	13																								
EM77BF-501B		SET / TAKIM	VERTICAL ADAPTOR PLASTIC CAP DİKEY ADAPTÖR PLASTİK KAPAK		1	1	1	0	1			1	0	1					1	1	1	1	1	0	1		0	1		1	0	1					1	1	1	1	1	1	1	0	1																								
EM77BF-502		SET / TAKIM	ADAPTOR PLASTIC CAP BİNA ADAPTÖR PLASTİK KAPAK		1	2		1				2	2						1	2			2			1			2							2	2							1	2			2			2			1											
EM77BF-91		PIECE / ADET	ROD GUIDE PLASTIC ÜSTÜN KILAVUZ PLASTİĞİ		6	12	12	12	12	12	12	12	18	12	18	12	18	12	12	18	18	18	18	18	18	18	18	18	24	18	24	18	24	18	18	24	18	24	18	24	18	18	24	24	24	24	24	24	24	24	24	24	24	24							
EM77BF-G02		PIECE / ADET	SASH WEDGE KANAT-CAM TAKOZU		8	12						16							20							24																			28																								
EM77BF-22		PIECE / ADET	PVC CORNER ALIGNMENT PVC KÖŞE GÖNYE		8	12						16							20							24																			28																								
EM77BF-515		SET / TAKIM	CORNER CAP SET KÖŞE DÖNÜŞ KAPAK TAKIMI	90° CORNER KÖŞE	1																																																													
EM70LS-09		PIECE / ADET	DRAINAGE CAP TAHLİYE KAPAĞI		2	3						4							5							6																			7																								
CC-101-17.4		PIECE / ADET	FRAME / KASA PRESS CORNER JOINT PRES KÖŞE BAĞLANTI	45° FRAME COMBINATION KASA BİRLEŞİMİ	8	8						8							8							8																			8																								
KC-801-17.2		PIECE / ADET	FRAME / KASA MECHANICAL CORNER JOINT MEKANİK KÖŞE BAĞLANTI																																																																				
CC-103-18.3		PIECE / ADET	SASH / KANAT PRESS CORNER JOINT / PRES KÖŞE BAĞLANTI		16	24						32							40							48																			56																								
KC-803-18.1		PIECE / ADET	SASH / KANAT MECHANICAL CORNER JOINT / MEKANİK KÖŞE BAĞLANTI																																																																			
CA77BF-103		SET / TAKIM	FRAME CORNER JOINT KASA KÖŞE BAĞLANTI	77BF-103-18 When used Kullanildiginda	2																																																																	

AKSESUAR CHART / AKSESUAR LİSTESİ

| 77BF KATLANIR KAYAR SİSTEM | | | | | 8 | | | | | | | | | | | | | | 9 | | | | | | | | | 10 | | | | | | | | | | | | | | | | | | | | | | | | 11 | | | | | | 12 | | | | | | | | 13 | | 14 | | | | | | | | | | | | | |
|---|---|---

CORNER AKSESUAR CHART / KÖŞE DÖNÜŞ AKSESUAR LİSTESİ

77BF
KATLANIR KAYAR SİSTEM

SYSTEM CODE / SİSTEM KOD	PICTURE / RESİM	PACKAGE / PAKET	DESCRIPTION / TANIM	OPENING / AÇILIM	PASSIVE/PASİF 1	3	5	7	ACTIVE / AKTİF 1	2	3	4	5	6	7
					2A				02-B 02-C	3A	02-B 02-C	3A	02-B 02-C	3A	02-B 02-C
AC77BF-101		PIECE / ADET	**MINIMAL HANDLE (INWARD OPENING)** KOL (İÇE AÇILIR)	**INWARD** İÇE AÇILIR	1	2	3	4	-	1	1	2	2	3	3
AC77BF-102		PIECE / ADET	**MINIMAL HANDLE (OUTWARD OPENING)** KOL (DIŞA AÇILIR)	**OUTWARD** DIŞA AÇILIR											
AC77BF-103		PIECE / ADET	**DOUBLE HANDLE** MASTER KOL		-	-	-	-	1	-	1	-	1	-	1
AC77BF-111		PIECE / ADET	**PULL HANDLE** ÇEKME KOL	**INWARD** İÇE AÇILIR	-	1	2	3	-	1	1	2	2	3	3
AC77BF-112		PIECE / ADET	**HINGE WITH THREADED PLATE** ÇEKME KOL	**OUTWARD** DIŞA AÇILIR											
AC77BF-201		PIECE / ADET	**TWO-WAY MOVEMENT** KOL İLETİŞİM EKİPMANI		1	2	3	4	-	1	1	2	2	3	3
AC77BF-202		PIECE / ADET	**MULTIPOINT LOCKING TWO-WAYS MOVEMENTS, INTERNAL RODS** KİLİT		-	-	-	-	1 -	-	1 -	-	1 -	-	1 -
AC77BF-203		PIECE / ADET	**3 LOCKING POINT VERTICAL LOCK** 3 NOKTADAN KİLİTLEMELİ İSPANYOLET		-	-	-	-	- 1	-	- 1	-	- 1	-	- 1
AC77BF-204		SET / TAKIM	**UPDOWN CONNECTION FOR TRIPLE LOCK** 3 NOKTADAN KİLİTLİ İSPANYOLET İÇİN GİJON BAĞLANTI APARATI		-	-	-	-	- 1	-	- 1	-	- 1	-	- 1
Door.Cyl.100		PIECE / ADET	**DOOR CYLINDER** 100 mm SİLİNDİR 100 mm		-	-	-	-	- 1	-	1 1	-	1 1	-	1 1
AC77BF-211		SET / TAKIM	**LOCKING ROD KIT** KİLİTLEME TİJ TAKIMI		1	2	3	4	1 1	1	2 2	2	3 3	3	4 4
EM77BF-281		SET / TAKIM	**SASH GUIDE SET** KANAT KILAVUZ YUVASI		1	2	3	4	1 1	1	2 2	2	3 3	3	4 4
AC77BF-221		PIECE / ADET	**ADJUSTABLE COUNTERPLATE** KİLİT KARŞİLİĞİ		-	-	-	-	1 1	-	1 1	-	1 1	-	1 1
AC77BF-222		PIECE / ADET	**3 LOCKING POINT ADJUSTABLE COUNTERPLATE** 3 NOKTADAN KİLİTLEMELİ KİLİT KARŞİLİĞİ		-	-	-	-	- -	-	- 2	-	- 2	-	- 2
EM77BF-221		SET / TAKIM	**LOCK AND STIKER ADAPTER** KİLİT VE KARŞILIK ADAPTÖRÜ		-	-	-	-	2 3	-	2 3	-	2 3	-	2 3
AC77BF-301		PIECE / ADET	**HINGE WITH THREADED PLATE** KATLANIR MENTEŞESİ **1 HATTA 3 MENTEŞE KANAT<2200**	**INWARD** İÇE AÇILIR	3	7	11	15	3	6	7	10	11	14	15
				OUTWARD DIŞA AÇILIR	3	6	9	12	3	5	6	8	9	11	12
			HINGE WITH THREADED PLATE KATLANIR MENTEŞESİ **1 HATTA 4 MENTEŞE 2200<KANAT<3000**	**INWARD** İÇE AÇILIR	4	10	16	22	4	8	10	14	16	20	22
				OUTWARD DIŞA AÇILIR	4	9	14	19	4	7	9	12	14	17	19
			HINGE WITH THREADED PLATE KATLANIR MENTEŞESİ **1 HATTA 5 MENTEŞE 3000<KANAT<3500**	**INWARD** İÇE AÇILIR	5	13	21	29	5	10	13	18	21	26	29
				OUTWARD DIŞA AÇILIR	5	12	19	26	5	9	12	16	19	23	26
AC77BF-311		PIECE / ADET	**LOWER ROLLER (ONE WHELL)** ALT KULMAN (TEK TEKERLİ)		-	-	-	-	-	1	-	1	-	1	-
AC77BF-312		PIECE / ADET	**UPPER ROLLER (ONE WHELL)** ÜST KULMAN (TEK TEKERLİ)		-	-	-	-	-	1	-	1	-	1	-
AC77BF-321		PIECE / ADET	**LOWER ROLLER (TWO WHELL)** ALT KULMAN (ÇİFT TEKERLİ)		-	1	2	3	-	-	1	1	2	2	3
AC77BF-322		PIECE / ADET	**UPPER ROLLER (TWO WHELL)** ÜST KULMAN (ÇİFT TEKERLİ)		-	1	2	3	-	-	1	1	2	2	3
AC77BF-401		PIECE / ADET	**STAINLESS RAIL** PASLANMAZ RAY (3,25 M)		(2*FL)/3,25				(2*FL)/3,25						
AC77BF-411		PIECE / ADET	**FRAME ADJUSTING PLATE** KASA AYAK PARÇASI	**77BF-401-18** When used / Kullanıldığında	(((FH-250)/200) + 1)				(((FH-250)/200) + 1)						
AC77BF-412		PIECE / ADET	**SETSKUR** SETSKUR	**77BF-401-18** When used Kullanıldığında **90° FRAME COMBINATION** KASA BİRLEŞİMİ	(((FH-250)/200) + 1)				(((FH-250)/200) + 1)						
AC77BF-413		PIECE / ADET	**SETSKUR** SETSKUR	**77BF-401-18** When used Kullanıldığında **45° FRAME COMBINATION** KASA BİRLEŞİMİ	(((FH-250)/200) + 1)				(((FH-250)/200) + 1)						
AC77BF-431		SET / TAKIM	**SASH HOLDER** KANAT TUTUCU		-	1	1	1	-	-	1	-	1	-	1
EM77BF-511		SET / TAKIM	**DROPPER CAP** DAMLALIK KAPAĞI	**OUTWARD** DIŞA AÇILIR	1	1	1	1	1	1	1	1	1	1	1
EM77BF-C01		SET / TAKIM	**EPDM CORNER ENJECTION** EPDM KÖŞE ENJEKSİYON		1	1	1	1	1	1	1	1	1	1	1
EM77BF-C02		SET / TAKIM	**EPDM CORNER ENJECTION** EPDM KÖŞE ENJEKSİYON		-	2	4	6	-	1	2	3	4	5	6
EM77BF-23		SET / TAKIM	**FRAME JOINT INSULATION PLASTIC** KASA BİRLEŞİM İZOLASYON PLASTİĞİ	**90° FRAME COMBINATION** KASA BİRLEŞİMİ	1 Piece / Adet				1 Piece / Adet						
EM77BF-501A		SET / TAKIM	**HORIZONTAL ADAPTOR PLASTIC CAP** YATAY ADAPTÖR PLASTİK KAPAK		1	5	9	13	1	3	5	7	9	11	13
EM77BF-501B		SET / TAKIM	**VERTICAL ADAPTOR PLASTIC CAP** DÜŞEY ADAPTÖR PLASTİK KAPAK		-	-	-	-	1	1	1	1	1	1	1
EM77BF-502		SET / TAKIM	**ADAPTOR PLASTIC CAP** BİNİ ADAPTÖR PLASTİK KAPAK		-	-	-	-	2	2	2	2	2	2	2
EM77BF-91		PIECE / ADET	**ROD GUIDE PLASTIC** GİJON KILAVUZ PLASTİĞİ		6	12	18	24	6 6	6	12 12	12	18 18	18	24 24
EM77BF-G02		PIECE / ADET	**SASH WEDGE** KANAT CAM TAKOZU		4	12	20	28	4	8	12	16	20	24	28
EM77BF-22		PIECE / ADET	**PVC CORNER ALIGNMENT** PVC KÖŞE GÖNYE		4	12	20	28	4	8	12	16	20	24	28
EM77BF-515		SET / TAKIM	**CORNER CAP SET** KÖŞE DÖNÜŞ KAPAK TAKIMI	**90° CORNER** KÖŞE	1 Piece / Adet				-						
EM70LS-09		PIECE / ADET	**DRANAIGE CAP** TAHLİYE KAPAĞI		1	3	5	7	1	2	3	4	5	6	7
CC-103-18.3		PIECE / ADET	**SASH** / KANAT **PRESS CORNER JOINT** / PRES KÖŞE BAĞLANTI		8	24	40	56	8	16	24	32	40	48	56
KC-803-18.1		PIECE / ADET	**SASH** / KANAT **MECHANICAL CORNER JOINT** / MEKANİK KÖŞE BAĞLANTI												
CA77BF-103		SET / TAKIM	**FRAME CORNER JOINT** KASA KÖŞE BAĞLANTI	**77BF-103-18** When used Kullanıldığında	1 Piece / Adet				1 Piece / Adet						
CA77BF-121		PIECE / ADET	**FRAME CORNER JOINT** KASA KÖŞE BAĞLANTI		2 Piece / Adet				-						

90°
CUTTING SIZE
KESİM ÖLÇÜLERİ

90° **FORMULE DESCRIPTION** / FORMÜL AÇIKLAMALARI

INWARD OPENING / İÇE AÇILIR

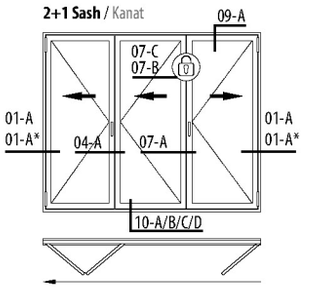

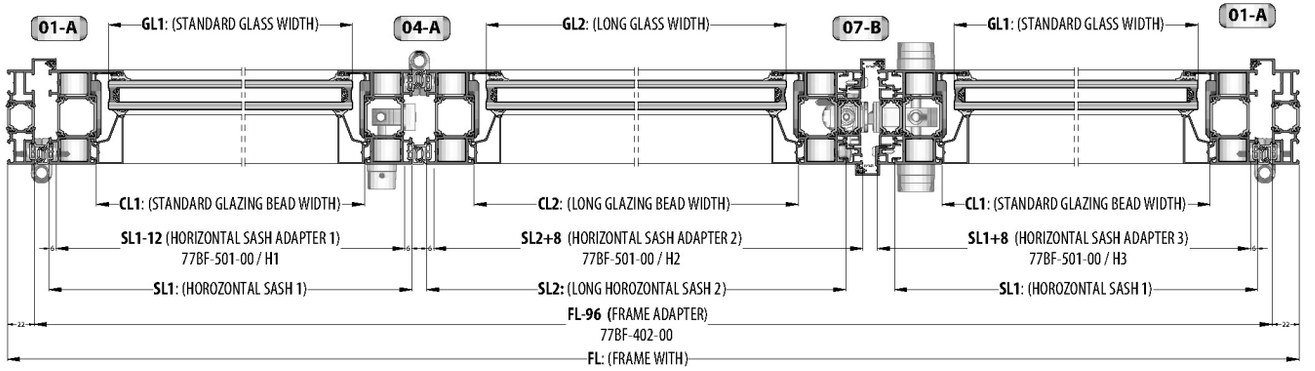

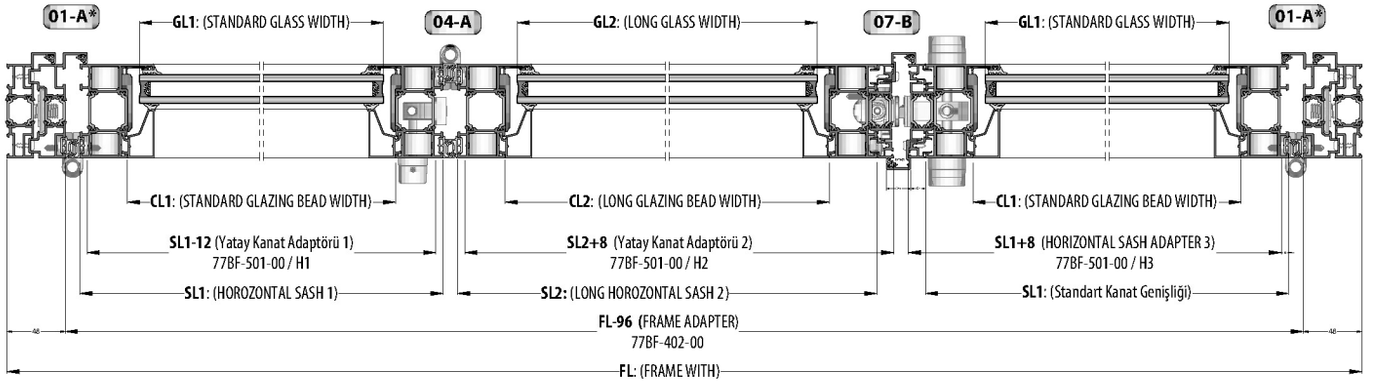

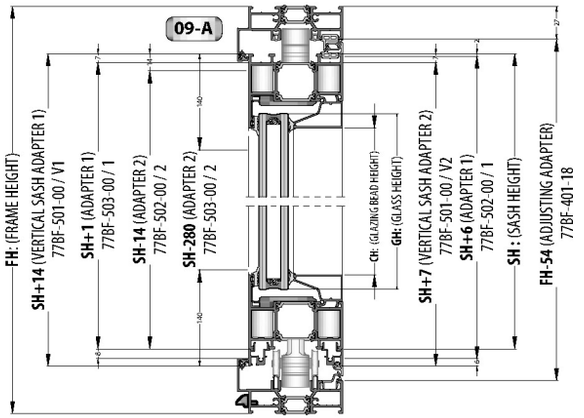

10-A **HORIZONTAL FRAME** / YATAY KASA **: 77BF-101-18**

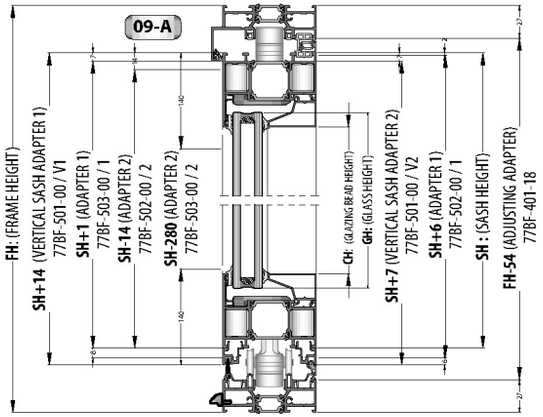

10-B **HORIZONTAL FRAME** / YATAY KASA **: 77BF-102-18**

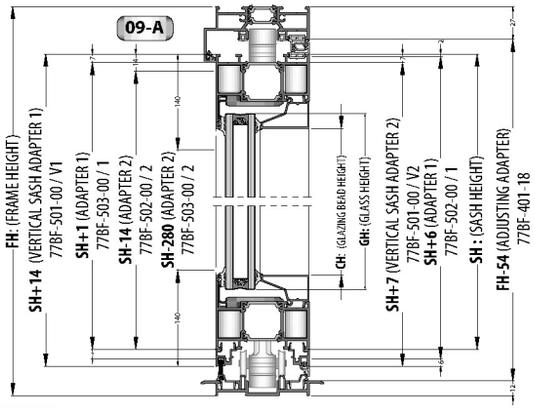

10-C **HORIZONTAL FRAME** / YATAY KASA **: 77BF-103-00**

90° **FORMULE DESCRIPTION** / FORMÜL AÇIKLAMALARI

OUTWARD OPENING / DIŞA AÇILIR

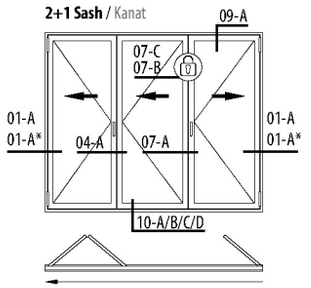

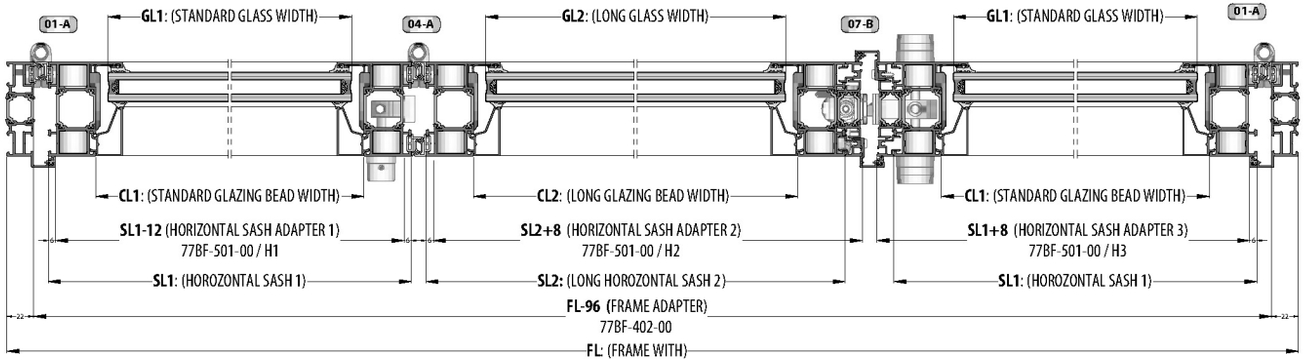

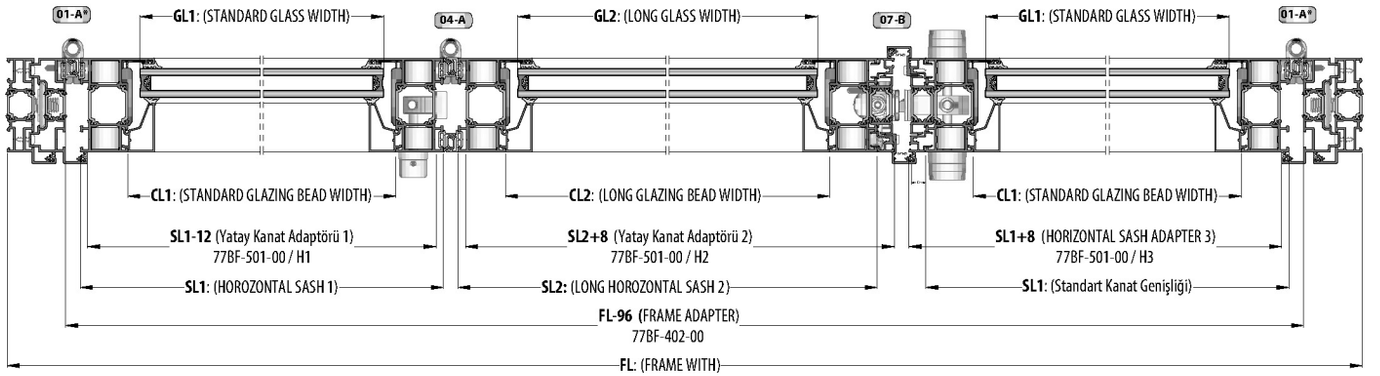

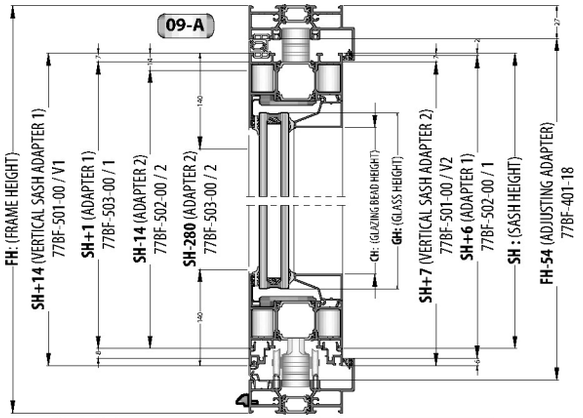

10-A HORIZONTAL FRAME / YATAY KASA : 77BF-101-18

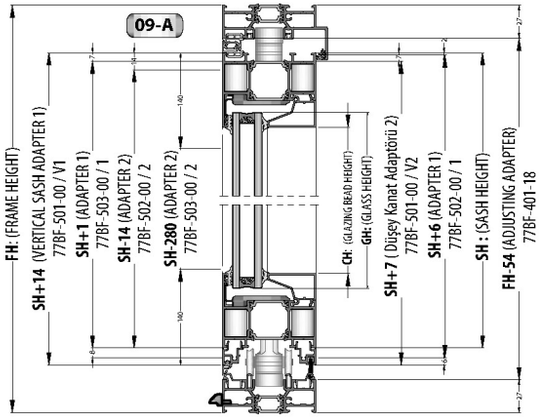

10-B HORIZONTAL FRAME / YATAY KASA : 77BF-102-18

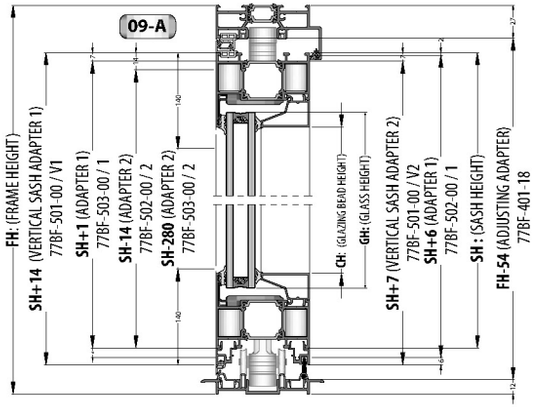

10-C HORIZONTAL FRAME / YATAY KASA : 77BF-103-00

90° **CUTTING SIZE LIST** / KESİM ÖLÇÜ LİSTESİ

90° CUTTING SIZE / KESİM ÖLÇÜLERİ				GASKETS / FİTİLLER										GLASS / CAM 77BF-201-18				GLASS / CAM 77BF-202-18				GLAZING BEAD / CAM ÇITASI 77BF-201-18								GLAZING BEAD / CAM ÇITASI 77BF-202-18							
														GL1				GL2				GL1				GL2				CL1				CH			
OPENING TYPE AÇILIM TİPİ	SECTION TYPE DETAY TİPİ	VERTICAL PROFILE DÜŞEY PROFİL	BOTTOM DETAIL TYPE ALT DETAY TİPİ	EM77BF-01	EM77BF-02	EM77BF-03	EM3-03	EM3-01	EM2-03	EM1-XX	O.RING-3 mm	AC77BF-421	EM45-05	QUANTITY MİKTAR	FORMULA FORMÜL Horizontal / Yatay	FORMULA FORMÜL Vertical / Düşey		QUANTITY MİKTAR	FORMULA FORMÜL Horizontal / Yatay	FORMULA FORMÜL Vertical / Düşey		QUANTITY MİKTAR	FORMULA FORMÜL Horizontal / Yatay	FORMULA FORMÜL Vertical / Düşey		QUANTITY MİKTAR	FORMULA FORMÜL Horizontal / Yatay			QUANTITY MİKTAR	FORMULA FORMÜL Vertical / Düşey			QUANTITY MİKTAR	FORMULA FORMÜL Horizontal / Yatay		
2 + 0	3A	77BF-111-18	77BF-101-18	1FL + 3FH	1FL + 3FH	FL	2FL+2FH	FH	2 (CL1+CH1) + 2 (CL2 +CH2)	2 (CL1+CH1) + 2 (CL2 +CH2)	2 (CL1+CH1) + 2 (CL2 +CH2)	-	2 FL	1	GL1 = SL1-98	GH = SH-98		1	GL2 = SL2-98	GH = SH-98		1	GL1 = SL1-88	GH = SH-88		1	GL2 = SL2-88	GH = SH-88		2	CL1 = SL1-78			2	CH = SH-122		
			77BF-102-18				1FL+2FH					1FL																								
			77BF-103-18																																	
		77BF-111-18 + 77BF-401-18	77BF-101-18				2FL+4FH					-																								
			77BF-102-18				1FL+4FH					1FL																								
			77BF-103-18																																	
2 + 1	7A	77BF-111-18	77BF-101-18	1FL + 4FH	1FL + 4FH	FL	2FL + 4FH	-	4 (CL1+CH1) + 2 (CL2 +CH2)	4 (CL1+CH1) + 2 (CL2 +CH2)	4 (CL1+CH1) + 2 (CL2 +CH2)	-	2 FL	2	GL1 = SL1-98	GH = SH-98		1	GL2 = SL2-98	GH = SH-98		2	GL1 = SL1-88	GH = SH-88		1	GL2 = SL2-88	GH = SH-88		4	CL1 = SL1-78			4	CH = SH-122		
			77BF-102-18				1FL + 4FH					1FL																								
			77BF-103-18																																	
	7B & 7C	77BF-111-18	77BF-101-18				2FL + 4FH					-																								
			77BF-102-18				1FL + 4FH					1FL																								
			77BF-103-18																																	
	7A*	77BF-111-18 + 77BF-401-18	77BF-101-18				2FL + 6FH					-																								
			77BF-102-18				1FL + 6FH					1FL																								
			77BF-103-18																																	
	7B & 7C	77BF-111-18 + 77BF-401-18	77BF-101-18				2FL + 6FH					-																								
			77BF-102-18				1FL + 6FH					1FL																								
			77BF-103-18																																	
3 + 0	2A	77BF-111-18	77BF-101-18	1FL + 5FH	1FL + 5FH	FL	2FL + 3FH	-	6 (CL1+CH1)	6 (CL1+CH1)	6 (CL1+CH1)	-	2 FL	3	GL1 = SL1-98	GH = SH-98		-	-	-		3	GL1 = SL1-88	GH = SH-88		-	-	-		6	CL1 = SL1-78			6	CH = SH-122		
			77BF-102-18				1FL + 3FH					1FL																								
			77BF-103-18																																	
	2B & 2C	77BF-111-18	77BF-101-18				2FL + 3FH					-																								
			77BF-102-18				1FL + 3FH					1FL																								
			77BF-103-18																																	
	2A*	77BF-111-18 + 77BF-401-18	77BF-101-18				2FL + 5FH					-																								
			77BF-102-18				1FL + 5FH					1FL																								
			77BF-103-18																																	
	2B & 2C	77BF-111-18 + 77BF-401-18	77BF-101-18				2FL + 5FH					-																								
			77BF-102-18				1FL + 5FH					1FL																								
			77BF-103-18																																	
2 + 2	8A	77BF-111-18	77BF-101-18	1FL + 6FH	1FL + 6FH	FL	2FL + 3FH	FH	4 (CL1+CH1) + 4 (CL2 +CH2)	4 (CL1+CH1) + 4 (CL2 +CH2)	4 (CL1+CH1) + 4 (CL2 +CH2)	-	2 FL	2	GL1 = SL1-98	GH = SH-98		2	GL2 = SL2-98	GH = SH-98		2	GL1 = SL1-88	GH = SH-88		2	GL2 = SL2-88	GH = SH-88		4	CL1 = SL1-78			4	CH = SH-122		
			77BF-102-18				1FL + 3FH					1FL																								
			77BF-103-18																																	
		77BF-111-18 + 77BF-401-18	77BF-101-18				2FL + 5FH					-																								
			77BF-102-18				1FL + 5FH					1FL																								
			77BF-103-18																																	
3 + 1	6A	77BF-111-18	77BF-101-18	1FL + 6FH	1FL + 6FH	FL	2FL + 4FH	-	8 (CL1+CH1)	8 (CL1+CH1)	8 (CL1+CH1)	-	2 FL	4	GL1 = SL1-98	GH = SH-98		-	-	-		4	GL1 = SL1-88	GH = SH-88		-	-	-		8	CL1 = SL1-78			8	CH = SH-122		
			77BF-102-18				1FL + 4FH					1FL																								
			77BF-103-18																																	
	6B & 6C	77BF-111-18	77BF-101-18				2FL + 4FH					-																								
			77BF-102-18				1FL + 4FH					1FL																								
			77BF-103-18																																	
	6A*	77BF-111-18 + 77BF-401-18	77BF-101-18				2FL + 6FH					-																								
			77BF-102-18				1FL + 6FH					1FL																								
			77BF-103-18																																	
	6B & 6C	77BF-111-18 + 77BF-401-18	77BF-101-18				2FL + 6FH					-																								
			77BF-102-18				1FL + 6FH					1FL																								
			77BF-103-18																																	

90° **CUTTING SIZE LIST** / KESİM ÖLÇÜ LİSTESİ

90° CUTTING SIZE KESİM ÖLÇÜLERİ				HORIZONTAL FRAME YATAY KASA 77BF-101-18		HORIZONTAL FRAME YATAY KASA 77BF-102-18		HORIZONTAL FRAME YATAY KASA 77BF-103-18		VERTICAL FRAME DÜŞEY KASA 77BF-111-18		ADJUSTING ADAPTER AYAR ADAPTÖRÜ 77BF-401-18		HORIZONTAL SASH 1 YATAY KANAT 1 77BF-201-18		HORIZONTAL SASH 2 YATAY KANAT 2 77BF-201-18		VERTICAL SASH DÜŞEY KANAT 77BF-201-18		FRAME ADAPTER KASA ADAPTÖRÜ 77BF-402-00		HORIZONTAL SASH ADAPTER 1 YATAY KANAT ADAPTÖRÜ 1 77BF-501-00 / H1		HORIZONTAL SASH ADAPTER 2 YATAY KANAT ADAPTÖRÜ 2 77BF-501-00 / H2		HORIZONTAL SASH ADAPTER 3 YATAY KANAT ADAPTÖRÜ 3 77BF-501-00 / H3		VERTICAL SASH ADAPTER 1 DÜŞEY KANAT ADAPTÖRÜ 1 77BF-501-00 / V1		VERTICAL SASH ADAPTER 2 DÜŞEY KANAT ADAPTÖRÜ 2 77BF-501-00 / V2		ADAPTER 1 ADAPTÖR 1 77BF-502-00 / 1		ADAPTER 2 ADAPTÖR 2 77BF-502-00 / 2		ADAPTER 1 ADAPTÖR 1 77BF-503-00 / 1		ADAPTER 2 ADAPTÖR 2 77BF-503-00 / 2	
OPENING TYPE AÇILIM TİPİ	SECTION TYPE DETAY TİPİ	VERTICAL PROFILE DÜŞEY PROFİL	BOTTOM DETAIL TYPE ALT DETAY TİPİ	QUANTITY ANGULAR MİKTAR / AÇI	FORMULA / FORMÜL	QUANTITY ANGULAR MİKTAR / AÇI	FORMULA / FORMÜL	QUANTITY ANGULAR MİKTAR / AÇI	FORMULA / FORMÜL	QUANTITY ANGULAR MİKTAR / AÇI	FORMULA / FORMÜL	QUANTITY ANGULAR MİKTAR / AÇI	FORMULA / FORMÜL	QUANTITY ANGULAR MİKTAR / AÇI	FORMULA / FORMÜL	QUANTITY ANGULAR MİKTAR / AÇI	FORMULA / FORMÜL	QUANTITY ANGULAR MİKTAR / AÇI	FORMULA / FORMÜL	QUANTITY ANGULAR MİKTAR / AÇI	FORMULA / FORMÜL	QUANTITY ANGULAR MİKTAR / AÇI	FORMULA / FORMÜL	QUANTITY ANGULAR MİKTAR / AÇI	FORMULA / FORMÜL	QUANTITY ANGULAR MİKTAR / AÇI	FORMULA / FORMÜL	QUANTITY ANGULAR MİKTAR / AÇI	FORMULA / FORMÜL	QUANTITY ANGULAR MİKTAR / AÇI	FORMULA / FORMÜL	QUANTITY ANGULAR MİKTAR / AÇI	FORMULA / FORMÜL	QUANTITY ANGULAR MİKTAR / AÇI	FORMULA / FORMÜL
2 + 0	3A	77BF-111-18	77BF-101-18	2 90° / 1 90° / 1 90°	FL-44	1 90°	FL-44	1 90°	FL-44	2 90°	FH	2 90° / 2 90° / 2 90°	FH-54 / FH-27 / FH-39	2 45°	SL1 = ((FL-94)/2)-23	2 45°	SL2=SL1+51	4 45°	SH = FH-92 / SH = FH-92 / SH = FH-77 / SH = FH-92 / SH = FH-92 / SH = FH-77	1 90° / 2 90° / 2 90°	FL-44	2 90°	SL1-12	2 90°/45°	SL2+8	-	-	1 90° / 45°	SH+14	1 90° / 45°	SH+7	1 90°	SH+6	-	-	-	-	-	-
			77BF-102-18					1 90°	FL-44																														
			77BF-103-18																																				
	3A*	77BF-111-18 + 77BF-401-18	77BF-101-18	2 90° / 1 90° / 1 90°	FL-44															1 90° / 2 90° / 2 90°	FL-96																		
			77BF-102-18			1 90°	FL-44																																
			77BF-103-18					1 90°	FL-44																														
2 + 1	7A	77BF-111-18	77BF-101-18	2 90° / 1 90° / 1 90°	FL-44	1 90°	FL-44							4 45°	SL1 = ((FL-106)/3)-15,3	2 45°	SL2=SL1+51	6 45°	SH = FH-92 / SH = FH-92 / SH = FH-77 / SH = FH-92 / SH = FH-92 / SH = FH-77 / SH = FH-92 / SH = FH-92 / SH = FH-77	1 90° / 2 90° / 2 90°	FL-44	4 90°	SL1-12	2 90°/45°	SL2+8	-	-	1 90° / 45°	SH+14	1 90° / 45°	SH+7	1 90°	SH+6	1 90°	SH-14	-	-	-	-
			77BF-102-18					1 90°	FL-44																										SH-10				
			77BF-103-18																																				
	7B & 7C	77BF-111-18	77BF-101-18	2 90° / 1 90° / 1 90°	FL-44	1 90°	FL-44								SL1 = ((FL-120)/3)-15,3				SH = FH-92 / SH = FH-92 / SH = FH-77 / SH = FH-92 / SH = FH-92 / SH = FH-77 / SH = FH-92 / SH = FH-92 / SH = FH-77	1 90° / 2 90° / 2 90°	FL-44	2 90°	SL1-12	2 90° / 45°	SL1+8	2 90° / 45°	SH+14	2 90° / 45°	SH+7						SH-14	1 90°	SH+1	1 90°	SH-280
			77BF-102-18					1 90°	FL-44																								SH-10				
			77BF-103-18																														SH-14				
	7A*	77BF-111-18 + 77BF-401-18	77BF-101-18	2 90° / 1 90° / 1 90°	FL-44										SL1 = ((FL-158)/3)-15,3				SH = FH-92 / SH = FH-92 / SH = FH-77 / SH = FH-92 / SH = FH-92 / SH = FH-77 / SH = FH-92 / SH = FH-92 / SH = FH-77	1 90° / 2 90° / 2 90°	FL-96	4 90°	SL1-12	-	-	1 90° / 45°	SH+14	1 90° / 45°	SH+7						SH-10	-	-	-	-
			77BF-102-18			1 90°	FL-44																										SH-14				
			77BF-103-18					1 90°	FL-44																								SH-10				
	7B & 7C	77BF-111-18 + 77BF-401-18	77BF-101-18	2 90° / 1 90° / 1 90°	FL-44	1 90°	FL-44					2 90° / 2 90° / 2 90°	FH-54 / FH-27 / FH-39		SL1 = ((FL-172)/3)-15,3				SH = FH-92 / SH = FH-92 / SH = FH-77	1 90° / 2 90° / 2 90°	FL-96	2 90°	SL1-12			2 90° / 45°	SL1+8	2 90° / 45°	SH+14	2 90° / 45°	SH+7					1 90°	SH+1	1 90°	SH-280
			77BF-102-18					1 90°	FL-44																														
			77BF-103-18																																				
3 + 0	2A	77BF-111-18	77BF-101-18	2 90° / 1 90° / 1 90°	FL-44	1 90°	FL-44							6 45°	SL1 = (FL-92)/3	-	-	6 45°	SH = FH-92 / SH = FH-92 / SH = FH-77 / SH = FH-92 / SH = FH-92 / SH = FH-77 / SH = FH-92 / SH = FH-92 / SH = FH-77	1 90° / 2 90° / 2 90°	FL-44	6 90°	SL1-12	-	-	-	-	-	-	-	-	1 90°	SH+6	-	-	-	-	-	-
			77BF-102-18					1 90°	FL-44																														
			77BF-103-18																																				
	2B & 2C	77BF-111-18	77BF-101-18	2 90° / 1 90° / 1 90°	FL-44										SL1 = (FL-106)/3				SH = FH-92 / SH = FH-92 / SH = FH-77 / SH = FH-92 / SH = FH-92 / SH = FH-77 / SH = FH-92 / SH = FH-92 / SH = FH-77	1 90° / 2 90° / 2 90°	FL-44	4 90°	SL1-12			2 90° / 45°	SL1+8	1 90° / 45°	SH+14	1 90° / 45°	SH+7					1 90°	SH+1	-	-
			77BF-102-18			1 90°	FL-44																																
			77BF-103-18					1 90°	FL-44																														
	2A*	77BF-111-18 + 77BF-401-18	77BF-101-18	2 90° / 1 90° / 1 90°	FL-44										SL1 = (FL-144)/3				SH = FH-92 / SH = FH-92 / SH = FH-77 / SH = FH-92 / SH = FH-92 / SH = FH-77 / SH = FH-92 / SH = FH-92 / SH = FH-77	1 90° / 2 90° / 2 90°	FL-96	6 90°	SL1-12	-	-	-	-	-	-	-	-					-	-	-	-
			77BF-102-18																																				
			77BF-103-18																																				
	2B & 2C	77BF-111-18 + 77BF-401-18	77BF-101-18	2 90° / 1 90° / 1 90°	FL-44										SL1 = (FL-158)/3				SH = FH-92 / SH = FH-92 / SH = FH-77	1 90° / 2 90° / 2 90°	FL-96	4 90°	SL1-12			2 90° / 45°	SL1+8	1 90° / 45°	SH+14	1 90° / 45°	SH+7					1 90°	SH+1	-	-
			77BF-102-18																																				
			77BF-103-18																																				
2 + 2	8A	77BF-111-18	77BF-101-18	2 90° / 1 90° / 1 90°	FL-44	1 90°	FL-44							4 45°	SL1 = ((FL-132)/4)-23	4 45°	SL2=SL1+51	8 45°	SH = FH-92 / SH = FH-92 / SH = FH-77 / SH = FH-92 / SH = FH-92 / SH = FH-77 / SH = FH-92 / SH = FH-92 / SH = FH-77	1 90° / 2 90° / 2 90°	FL-44	4 90°	SL1-12	4 90°/45°	SL2+8	-	-	2 90° / 45°	SH+14	2 90° / 45°	SH+7	1 90°	SH+6	1 90°	SH-14	-	-	-	-
			77BF-102-18					1 90°	FL-44																								SH-10				
			77BF-103-18																														SH-14				
	8A*	77BF-111-18 + 77BF-401-18	77BF-101-18	2 90° / 1 90° / 1 90°	FL-44							2 90° / 2 90° / 2 90°	FH-54 / FH-27 / FH-39		SL1 = ((FL-184)/4)-23				SH = FH-92 / SH = FH-92 / SH = FH-77 / SH = FH-92 / SH = FH-92 / SH = FH-77 / SH = FH-92 / SH = FH-92 / SH = FH-77	1 90° / 2 90° / 2 90°	FL-96												SH-10				
			77BF-102-18			1 90°	FL-44																										SH-14				
			77BF-103-18					1 90°	FL-44																								SH-10				
3 + 1	6A	77BF-111-18	77BF-101-18	2 90° / 1 90° / 1 90°	FL-44	1 90°	FL-44							8 45°	SL1 = (FL-104)/4	-	-	8 45°	SH = FH-92 / SH = FH-92 / SH = FH-77 / SH = FH-92 / SH = FH-92 / SH = FH-77 / SH = FH-92 / SH = FH-92 / SH = FH-77	1 90° / 2 90° / 2 90°	FL-44	8 90°	SL1-12	-	-	-	-	-	-	-	-	1 90°	SH+6	1 90°	SH-14	-	-	-	-
			77BF-102-18					1 90°	FL-44																								SH-10				
			77BF-103-18																														SH-14				
	6B & 6C	77BF-111-18	77BF-101-18	2 90° / 1 90° / 1 90°	FL-44										SL1 = (FL-132)/4				SH = FH-92 / SH = FH-92 / SH = FH-77	1 90° / 2 90° / 2 90°	FL-44	4 90°	SL1-12			4 90° / 45°	SL1+8	2 90° / 45°	SH+14	2 90° / 45°	SH+7					2 90°	SH+1		
			77BF-102-18			1 90°	FL-44																										SH-10				
			77BF-103-18					1 90°	FL-44																								SH-14				
	6A*	77BF-111-18 + 77BF-401-18	77BF-101-18	2 90° / 1 90° / 1 90°	FL-44										SL1 = (FL-156)/4				SH = FH-92 / SH = FH-92 / SH = FH-77	1 90° / 2 90° / 2 90°	FL-96	8 90°	SL1-12			-	-	-	-	-	-					-	-		
			77BF-102-18																														SH-10				
			77BF-103-18																														SH-14				
	6B & 6C	77BF-111-18 + 77BF-401-18	77BF-101-18	2 90° / 1 90° / 1 90°	FL-44										SL1 = (FL-184)/4				SH = FH-92 / SH = FH-92 / SH = FH-77	1 90° / 2 90° / 2 90°	FL-96	4 90°	SL1-12			4 90° / 45°	SL1+8	2 90° / 45°	SH+14	2 90° / 45°	SH+7					2 90°	SH+1		
			77BF-102-18																																				
			77BF-103-18																																				

90° CUTTING SIZE KESİM ÖLÇÜLERİ

OPENING TYPE AÇILIM TİPİ	SECTION TYPE DETAY TİPİ	VERTICAL PROFILE DÜŞEY PROFİL	BOTTOM DETAIL TYPE ALT DETAY TİPİ	GASKETS / FİTİLLER										GLASS / CAM 77BF-201-18				GLASS / CAM 77BF-202-18				GLAZING BEAD / CAM ÇİTASI 77BF-201-18								GLAZING BEAD / CAM ÇİTASI 77BF-202-18							
				EM77BF-01	EM77BF-02	EM77BF-03	EM3-03	EM3-01	EM2-03	EM1-XX	O.RING-3 mm	AC77BF-421	EM45-05	GL1			GL2			GL1			GL2			CL1		CH		CL2		CH		CL1		CH		CL2		CH	
														QUANTITY MİKTAR	FORMULA FORMÜL Horizontal / Yatay	FORMULA FORMÜL Vertical / Düşey	QUANTITY MİKTAR	FORMULA FORMÜL Horizontal / Yatay	FORMULA FORMÜL Vertical / Düşey	QUANTITY MİKTAR	FORMULA FORMÜL Horizontal / Yatay	FORMULA FORMÜL Vertical / Düşey	QUANTITY MİKTAR	FORMULA FORMÜL Horizontal / Yatay	FORMULA FORMÜL Vertical / Düşey	QUANTITY MİKTAR	FORMULA FORMÜL Horizontal / Yatay	QUANTITY MİKTAR	FORMULA FORMÜL Vertical / Düşey	QUANTITY MİKTAR	FORMULA FORMÜL Horizontal / Yatay	QUANTITY MİKTAR	FORMULA FORMÜL Vertical / Düşey	QUANTITY MİKTAR	FORMULA FORMÜL Horizontal / Yatay	QUANTITY MİKTAR	FORMULA FORMÜL Vertical / Düşey	QUANTITY MİKTAR	FORMULA FORMÜL Horizontal / Yatay	QUANTITY MİKTAR	FORMULA FORMÜL Vertical / Düşey	QUANTITY MİKTAR	FORMULA FORMÜL Horizontal / Yatay	QUANTITY MİKTAR	FORMULA FORMÜL Vertical / Düşey
4 + 0	3A	77BF-111-18	77BF-101-18	1FL + 7FH	1FL + 7FH	FL	2FL + 2FH	FH	6 (CL1+CH1) + 2 (CL2 +CH2)	6 (CL1+CH1) + 2 (CL2 +CH2)	6 (CL1+CH1) + 2 (CL2 +CH2)	-	2 FL	3	GL1 = SL1-98	GH = SH-98	1	GL2 = SL2-98	GH = SH-98	3	GL1 = SL1-88	GH = SH-88	1	GL2 = SL2-88	GH = SH-88	6	CL1 = SL1-78	6	CH = SH-122	2	CL2 = SL2-78	2	CH = SH-122	6	CL1 = SL1-78	6	CH = SH-106	2	CL2 = SL2-78	2	CH = SH-106
			77BF-102-18				1FL + 2FH					1FL																										
			77BF-103-18				1FL + 2FH																															
		77BF-111-18 + 77BF-401-18	77BF-101-18				2FL + 4FH					-																									
			77BF-102-18				1FL + 4FH					1FL																										
			77BF-103-18				1FL + 4FH																															
3 + 2	7A	77BF-111-18	77BF-101-18	1FL + 8FH	1FL + 8FH	FL	2FL + 4FH	-	8 (CL1+CH1) + 2 (CL2 +CH2)	8 (CL1+CH1) + 2 (CL2 +CH2)	8 (CL1+CH1) + 2 (CL2 +CH2)	-	2 FL	4	GL1 = SL1-98	GH = SH-98	1	GL2 = SL2-98	GH = SH-98	4	GL1 = SL1-88	GH = SH-88	1	GL2 = SL2-88	GH = SH-88	8	CL1 = SL1-78	8	CH = SH-122	2	CL2 = SL2-78	2	CH = SH-122	8	CL1 = SL1-78	8	CH = SH-106	2	CL2 = SL2-78	2	CH = SH-106
			77BF-102-18				1FL + 4FH					1FL																										
	7B & 7C	77BF-111-18	77BF-101-18				2FL + 4FH					-																										
			77BF-102-18				1FL + 4FH					1FL																										
			77BF-103-18				1FL + 4FH																															
	7A*	77BF-111-18 + 77BF-401-18	77BF-101-18				2FL + 6FH					-																										
			77BF-102-18				1FL + 6FH					1FL																										
			77BF-103-18				1FL + 6FH																															
	7B & 7C	77BF-111-18 + 77BF-401-18	77BF-101-18				2FL + 6FH					-																										
			77BF-102-18				1FL + 6FH					1FL																										
			77BF-103-18				1FL + 6FH																															
4 + 1	7A	77BF-111-18	77BF-101-18	1FL + 8FH	1FL + 8FH	FL	2FL + 4FH	-	8 (CL1+CH1) + 2 (CL2 +CH2)	8 (CL1+CH1) + 2 (CL2 +CH2)	8 (CL1+CH1) + 2 (CL2 +CH2)	-	2 FL	4	GL1 = SL1-98	GH = SH-98	1	GL2 = SL2-98	GH = SH-98	4	GL1 = SL1-88	GH = SH-88	1	GL2 = SL2-88	GH = SH-88	8	CL1 = SL1-78	8	CH = SH-122	2	CL2 = SL2-78	2	CH = SH-122	8	CL1 = SL1-78	8	CH = SH-106	2	CL2 = SL2-78	2	CH = SH-106
			77BF-102-18				1FL + 4FH					1FL																										
	7B & 7C	77BF-111-18	77BF-101-18				2FL + 4FH					-																										
			77BF-102-18				1FL + 4FH					1FL																										
			77BF-103-18				1FL + 4FH																															
	7A*	77BF-111-18 + 77BF-401-18	77BF-101-18				2FL + 6FH					-																										
			77BF-102-18				1FL + 6FH					1FL																										
			77BF-103-18				1FL + 6FH																															
	7B & 7C	77BF-111-18 + 77BF-401-18	77BF-101-18				2FL + 6FH					-																										
			77BF-102-18				1FL + 6FH					1FL																										
			77BF-103-18				1FL + 6FH																															
5 + 0	2A	77BF-111-18	77BF-101-18	1FL + 9FH	1FL + 9FH	FL	2FL + 3FH	-	10 (CL1+CH1)	10 (CL1+CH1)	10 (CL1+CH1)	-	2 FL	5	GL1 = SL1-98	GH = SH-98	-	-	-	5	GL1 = SL1-88	GH = SH-88	-	-	-	10	CL1 = SL1-78	10	CH = SH-122	-	-	-	-	10	CL1 = SL1-78	10	CH = SH-106	-	-	-	-
			77BF-102-18				1FL + 3FH					1FL																										
			77BF-103-18				1FL + 3FH																															
	2B & 2C	77BF-111-18	77BF-101-18				2FL + 3FH					-																										
			77BF-102-18				1FL + 3FH					1FL																										
			77BF-103-18				1FL + 3FH																															
	2A*	77BF-111-18 + 77BF-401-18	77BF-101-18				2FL + 5FH					-																										
			77BF-102-18				1FL + 5FH					1FL																										
			77BF-103-18				1FL + 5FH																															
	2B & 2C	77BF-111-18 + 77BF-401-18	77BF-101-18				2FL + 5FH					-																										
			77BF-102-18				1FL + 5FH					1FL																										
			77BF-103-18				1FL + 5FH																															
3 + 3	6A	77BF-111-18	77BF-101-18	1FL + 10FH	1FL + 10FH	FL	2FL + 4FH	-	12 (CL1+CH1)	12 (CL1+CH1)	12 (CL1+CH1)	-	2 FL	6	GL1 = SL1-98	GH = SH-98	-	-	-	6	GL1 = SL1-88	GH = SH-88	-	-	-	12	CL1 = SL1-78	12	CH = SH-122	-	-	-	-	12	CL1 = SL1-78	12	CH = SH-106	-	-	-	-
			77BF-102-18				1FL + 4FH					1FL																										
	6B & 6C	77BF-111-18	77BF-101-18				2FL + 4FH					-																										
			77BF-102-18				1FL + 4FH					1FL																										
			77BF-103-18				1FL + 4FH																															
	6A*	77BF-111-18 + 77BF-401-18	77BF-101-18				2FL + 6FH					-																										
			77BF-102-18				1FL + 6FH					1FL																										
			77BF-103-18				1FL + 6FH																															
	6B & 6C	77BF-111-18 + 77BF-401-18	77BF-101-18				2FL + 6FH					-																										
			77BF-102-18				1FL + 6FH					1FL																										
			77BF-103-18				1FL + 6FH																															

90° CUTTING SIZE
KESİM ÖLÇÜLERİ

OPENING TYPE AÇILIM TİPİ	SECTION TYPE DETAY TİPİ	VERTICAL PROFILE DÜŞEY PROFİL	BOTTOM DETAIL TYPE ALT DETAY TİPİ	HORIZONTAL FRAME YATAY KASA 77BF-101-18		HORIZONTAL FRAME YATAY KASA 77BF-102-18		HORIZONTAL FRAME YATAY KASA 77BF-103-18		VERTICAL FRAME DÜŞEY KASA 77BF-111-18		ADJUSTING ADAPTER AYAR ADAPTÖRÜ 77BF-401-18		HORIZONTAL SASH 1 YATAY KANAT 1 77BF-201-18		HORIZONTAL SASH 2 YATAY KANAT 2 77BF-201-18		VERTICAL SASH DÜŞEY KANAT 77BF-201-18		FRAME ADAPTER KASA ADAPTÖRÜ 77BF-402-00		HORIZONTAL SASH ADAPTER 1 YATAY KANAT ADAPTÖRÜ 1 77BF-501-00 / H1		HORIZONTAL SASH ADAPTER 2 YATAY KANAT ADAPTÖRÜ 2 77BF-501-00 H2		HORIZONTAL SASH ADAPTER 3 YATAY KANAT ADAPTÖRÜ 3 77BF-501-00 / H3		VERTICAL SASH ADAPTER 1 DÜŞEY KANAT ADAPTÖRÜ 1 77BF-501-00 / V1		VERTICAL SASH ADAPTER 2 DÜŞEY KANAT ADAPTÖRÜ 2 77BF-501-00 / V2		ADAPTER 1 ADAPTÖR 1 77BF-502-00 / 1		ADAPTER 2 ADAPTÖR 2 77BF-502-00 / 2		ADAPTER 1 ADAPTÖR 1 77BF-503-00 / 1		ADAPTER 2 ADAPTÖR 2 77BF-503-00 / 2	
				QUANTITY ANGULAR MİKTAR / AÇI	FORMULA / FORMÜL	QUANTITY ANGULAR MİKTAR / AÇI	FORMULA / FORMÜL	QUANTITY ANGULAR MİKTAR / AÇI	FORMULA / FORMÜL	QUANTITY ANGULAR MİKTAR / AÇI	FORMULA / FORMÜL	QUANTITY ANGULAR MİKTAR / AÇI	FORMULA / FORMÜL	QUANTITY ANGULAR MİKTAR / AÇI	FORMULA / FORMÜL	QUANTITY ANGULAR MİKTAR / AÇI	FORMULA / FORMÜL	QUANTITY ANGULAR MİKTAR / AÇI	FORMULA / FORMÜL	QUANTITY ANGULAR MİKTAR / AÇI	FORMULA / FORMÜL	QUANTITY ANGULAR MİKTAR / AÇI	FORMULA / FORMÜL	QUANTITY ANGULAR MİKTAR / AÇI	FORMULA / FORMÜL	QUANTITY ANGULAR MİKTAR / AÇI	FORMULA / FORMÜL	QUANTITY ANGULAR MİKTAR / AÇI	FORMULA / FORMÜL	QUANTITY ANGULAR MİKTAR / AÇI	FORMULA / FORMÜL	QUANTITY ANGULAR MİKTAR / AÇI	FORMULA / FORMÜL	QUANTITY ANGULAR MİKTAR / AÇI	FORMULA / FORMÜL
4 + 0	3A	77BF-111-18	77BF-101-18	2 90°	FL-44	1 90°	FL-44	1 90°	FL-44	2 90°	FH			6 45°	SL1 = ((FL-118)/4)-11,5	2 45°	SL2=SL1+51	8 45°	SH = FH-92	1 90°	FL-44	6 90°	SL1-12	2 90°/45°	SL2+8	-	-	1 90° / 45°	SH+14	1 90° / 45°	SH+7	1 90°	SH+6	-	-	-	-	-	-
			77BF-102-18	1 90°				1 90°											SH = FH-92	2 90°																		
			77BF-103-18	1 90°															SH = FH-77	1 90°																		
		77BF-111-18 + 77BF-401-18	77BF-101-18	2 90°	FL-44			1 90°	FL-44			2 90°	FH-54		SL1 = ((FL-170)/4)-11,5				SH = FH-92	2 90°	FL-96																	
			77BF-102-18	1 90°		1 90°	FL-44						FH-27						SH = FH-92																		
			77BF-103-18	1 90°				1 90°	FL-44				FH-39						SH = FH-77	1 90°																		
3 + 2	7A	77BF-111-18	77BF-101-18	2 90°	FL-44	1 90°	FL-44	1 90°	FL-44	2 90°	FH			8 45°	SL1 = ((FL-130)/5)-9,2	2 45°	SL2=SL1+51	10 45°	SH = FH-92	1 90°	FL-44	8 90°	SL1-12	2 90°/45°	SL2+8	-	-	1 90° / 45°	SH+14	1 90° / 45°	SH+7	1 90°	SH+6		SH-14	1 90°	SH+1	1 90°	SH-280
			77BF-102-18	1 90°				1 90°	FL-44										SH = FH-92	2 90°															SH-10				
			77BF-103-18	1 90°															SH = FH-77	1 90°															SH-14			
	7B & 7C	77BF-111-18	77BF-101-18	2 90°	FL-44	1 90°	FL-44	1 90°	FL-44						SL1 = ((FL-144)/5)-9,2				SH = FH-92	2 90°	FL-44	6 90°	SL1-12			2 90° / 45°	SL1+8	2 90° / 45°	SH+14	2 90° / 45°	SH+7				SH-10			
			77BF-102-18	1 90°				1 90°	FL-44										SH = FH-92	2 90°															SH-14				
			77BF-103-18																SH = FH-77	1 90°															SH-10			
	7A*	77BF-111-18 + 77BF-401-18	77BF-101-18	2 90°	FL-44			1 90°	FL-44			2 90°	FH-54		SL1 = ((FL-182)/5)-9,2				SH = FH-92	2 90°	FL-96					-	-	1 90° / 45°	SH+14	1 90° / 45°	SH+7				SH-14			
			77BF-102-18	1 90°		1 90°	FL-44						FH-27						SH = FH-92																SH-10			
			77BF-103-18	1 90°				1 90°	FL-44				FH-39						SH = FH-77	1 90°															SH-14			
	7B & 7C	77BF-111-18 + 77BF-401-18	77BF-101-18	2 90°	FL-44			1 90°	FL-44				FH-54		SL1 = ((FL-196)/5)-9,2				SH = FH-92	2 90°	FL-96					2 90° / 45°	SL1+8	2 90° / 45°	SH+14	2 90° / 45°	SH+7				SH-10	1 90°	SH+1	1 90°	SH-280
			77BF-102-18	1 90°		1 90°	FL-44						FH-27						SH = FH-92																			
			77BF-103-18	1 90°				1 90°	FL-44				FH-39						SH = FH-77	1 90°																		
4 + 1	7A	77BF-111-18	77BF-101-18	2 90°	FL-44	1 90°	FL-44	1 90°	FL-44	2 90°	FH			8 45°	SL1 = ((FL-130)/5)-9,2	2 45°	SL2=SL1+51	10 45°	SH = FH-92	1 90°	FL-44	8 90°	SL1-12	2 90°/45°	SL2+8	-	-	1 90° / 45°	SH+14	1 90° / 45°	SH+7	1 90°	SH+6	1 90°	SH-14	1 90°	SH+1	1 90°	SH-280
			77BF-102-18	1 90°				1 90°	FL-44										SH = FH-92	2 90°															SH-10				
			77BF-103-18	1 90°															SH = FH-77	1 90°															SH-14			
	7B & 7C	77BF-111-18	77BF-101-18	2 90°	FL-44	1 90°	FL-44	1 90°	FL-44						SL1 = ((FL-144)/5)-9,2				SH = FH-92	2 90°	FL-44	6 90°	SL1-12			2 90° / 45°	SL1+8	2 90° / 45°	SH+14	2 90° / 45°	SH+7				SH-10			
			77BF-102-18	1 90°				1 90°	FL-44										SH = FH-92	2 90°															SH-14				
			77BF-103-18	1 90°															SH = FH-77	1 90°															SH-10			
	7A*	77BF-111-18 + 77BF-401-18	77BF-101-18	2 90°	FL-44			1 90°	FL-44			2 90°	FH-54		SL1 = ((FL-182)/5)-9,2				SH = FH-92	2 90°	FL-96					-	-	1 90° / 45°	SH+14	1 90° / 45°	SH+7				SH-14			
			77BF-102-18	1 90°		1 90°	FL-44						FH-27						SH = FH-92																SH-10			
			77BF-103-18	1 90°				1 90°	FL-44				FH-39						SH = FH-77	1 90°															SH-14			
	7B & 7C	77BF-111-18 + 77BF-401-18	77BF-101-18	2 90°	FL-44			1 90°	FL-44				FH-54		SL1 = ((FL-196)/5)-9,2				SH = FH-92	2 90°	FL-96					2 90° / 45°	SL1+8	2 90° / 45°	SH+14	2 90° / 45°	SH+7				SH-10	1 90°	SH+1	1 90°	SH-280
			77BF-102-18	1 90°		1 90°	FL-44						FH-27						SH = FH-92																			
			77BF-103-18	1 90°				1 90°	FL-44				FH-39						SH = FH-77	1 90°																		
5 + 0	2A	77BF-111-18	77BF-101-18	2 90°	FL-44	1 90°	FL-44	1 90°	FL-44	2 90°	FH			10 45°	SL1 = (FL-116)/5	-	-	10 45°	SH = FH-92	1 90°	FL-44	10 90°	SL1-12	-	-	-	-	-	-	-	-	1 90°	SH+6	-	-	-	-	-	-
			77BF-102-18	1 90°				1 90°	FL-44										SH = FH-92	2 90°																		
			77BF-103-18	1 90°															SH = FH-77	1 90°																		
	2B & 2C	77BF-111-18	77BF-101-18	2 90°	FL-44	1 90°	FL-44	1 90°	FL-44						SL1 = (FL-130)/5				SH = FH-92	2 90°	FL-44	8 90°	SL1-12			2 90° / 45°	SL1+8	1 90° / 45°	SH+14	1 90° / 45°	SH+7					1 90°	SH+1	-	-
			77BF-102-18	1 90°				1 90°	FL-44										SH = FH-92	2 90°																		
			77BF-103-18	1 90°															SH = FH-77	1 90°																		
	2A*	77BF-111-18 + 77BF-401-18	77BF-101-18	2 90°	FL-44			1 90°	FL-44			2 90°	FH-54		SL1 = (FL-168)/5				SH = FH-92	2 90°	FL-96	10 90°	SL1-12			-	-	-	-	-	-					-	-	-	-
			77BF-102-18	1 90°		1 90°	FL-44						FH-27						SH = FH-92																			
			77BF-103-18	1 90°				1 90°	FL-44				FH-39						SH = FH-77	1 90°																		
	2B & 2C	77BF-111-18 + 77BF-401-18	77BF-101-18	2 90°	FL-44			1 90°	FL-44				FH-54		SL1 = (FL-182)/5				SH = FH-92	2 90°	FL-96	8 90°	SL1-12			2 90° / 45°	SL1+8	1 90° / 45°	SH+14	1 90° / 45°	SH+7					1 90°	SH+1	-	-
			77BF-102-18	1 90°		1 90°	FL-44						FH-27						SH = FH-92																			
			77BF-103-18	1 90°				1 90°	FL-44				FH-39						SH = FH-77	1 90°																		
3 + 3	6A	77BF-111-18	77BF-101-18	2 90°	FL-44	1 90°	FL-44	1 90°	FL-44	2 90°	FH			12 45°	SL1 = (FL-128)/6	-	-	12 45°	SH = FH-92	1 90°	FL-44	12 90°	SL1-12	-	-	-	-	-	-	-	-	1 90°	SH+6		SH-14	-	-	-	-
			77BF-102-18	1 90°				1 90°	FL-44										SH = FH-92	2 90°															SH-10				
			77BF-103-18	1 90°															SH = FH-77	1 90°															SH-14			
	6B & 6C	77BF-111-18	77BF-101-18	2 90°	FL-44	1 90°	FL-44	1 90°	FL-44						SL1 = (FL-156)/6				SH = FH-92	2 90°	FL-44	8 90°	SL1-12			4 90° / 45°	SL1+8	2 90° / 45°	SH+14	2 90° / 45°	SH+7				SH-10	2 90°	SH+1		
			77BF-102-18	1 90°				1 90°	FL-44										SH = FH-92	2 90°															SH-14				
			77BF-103-18	1 90°															SH = FH-77	1 90°															SH-10			
	6A*	77BF-111-18 + 77BF-401-18	77BF-101-18	2 90°	FL-44			1 90°	FL-44			2 90°	FH-54		SL1 = (FL-180)/6				SH = FH-92	2 90°	FL-96	12 90°	SL1-12			-	-	-	-	-	-				SH-14	-	-	-	-
			77BF-102-18	1 90°		1 90°	FL-44						FH-27						SH = FH-92																SH-10				
			77BF-103-18	1 90°				1 90°	FL-44				FH-39						SH = FH-77	1 90°															SH-14			
	6B & 6C	77BF-111-18 + 77BF-401-18	77BF-101-18	2 90°	FL-44			1 90°	FL-44				FH-54		SL1 = (FL-208)/6				SH = FH-92	2 90°	FL-96	8 90°	SL1-12			4 90° / 45°	SL1+8	2 90° / 45°	SH+14	2 90° / 45°	SH+7				SH-10	2 90°	SH+1		
			77BF-102-18	1 90°		1 90°	FL-44						FH-27						SH = FH-92																			
			77BF-103-18	1 90°				1 90°	FL-44				FH-39						SH = FH-77	1 90°																		

CUTTING SIZE LIST / KESİM ÖLÇÜ LİSTESİ

90° CUTTING SIZE / KESİM ÖLÇÜLERİ

OPENING TYPE AÇILIM TİPİ	SECTION TYPE DETAY TİPİ	VERTICAL PROFILE DÜŞEY PROFİL	BOTTOM DETAIL TYPE ALT DETAY TİPİ	GASKETS / FİTİLLER										GLASS / CAM 77BF-201-18				GLASS / CAM 77BF-202-18				GLAZING BEAD / CAM ÇİTASI 77BF-201-18								GLAZING BEAD / CAM ÇİTASI 77BF-202-18							
				EM77BF-01	EM77BF-02	EM77BF-03	EM3-03	EM3-01	EM2-03	EM1-XX	O.RING-3 mm	AC77BF-421	EM45-05	GL1				GL2				GL1				GL2				CL1				CH			
														QUANTITY MİKTAR	FORMULA FORMÜL Horizontal / Yatay	FORMULA FORMÜL Vertical / Düşey		QUANTITY MİKTAR	FORMULA FORMÜL Horizontal / Yatay	FORMULA FORMÜL Vertical / Düşey		QUANTITY MİKTAR	FORMULA FORMÜL Horizontal / Yatay	FORMULA FORMÜL Vertical / Düşey		QUANTITY MİKTAR	FORMULA FORMÜL Horizontal / Yatay	FORMULA FORMÜL Vertical / Düşey		QUANTITY MİKTAR	FORMULA FORMÜL Horizontal / Yatay	FORMULA FORMÜL Vertical / Düşey		QUANTITY MİKTAR	FORMULA FORMÜL Horizontal / Yatay	FORMULA FORMÜL Vertical / Düşey		QUANTITY MİKTAR	FORMULA FORMÜL Horizontal / Yatay	FORMULA FORMÜL Vertical / Düşey	
4 + 2	8A	77BF-111-18	77BF-101-18	1FL + 10FH	1FL + 10FH	FL	2FL + 3FH	FH	8 (CL1+CH1) + 4 (CL2 +CH2)	8 (CL1+CH1) + 4 (CL2 +CH2)	8 (CL1+CH1) + 4 (CL2 +CH2)	-	2 FL	4	GL1 = SL1-98	GH = SH-98		2	GL2 = SL2-98	GH = SH-98		4	GL1 = SL1-88	GH = SH-88		2	GL2 = SL2-88	GH = SH-88		8	CL1 = SL1-78			8	CH = SH-122			4	CL2 = SL2-78			4	CH = SH-122			8	CL1 = SL1-78			8	CH = SH-106			4	CL2 = SL2-78			4	CH = SH-106		
			77BF-102-18				1FL + 3FH					1FL																										
			77BF-103-18																																		
		77BF-111-18 + 77BF-401-18	77BF-101-18				2FL + 5FH					-																										
			77BF-102-18				1FL + 5FH					1FL																										
			77BF-103-18																																		
5 + 1	6A	77BF-111-18	77BF-101-18	1FL + 10FH	1FL + 10FH	FL	2FL + 4FH	-	12 (CL1+CH1)	12 (CL1+CH1)	12 (CL1+CH1)	-	2 FL	6	GL1 = SL1-98	GH = SH-98		-	-	-		6	GL1 = SL1-88	GH = SH-88		-	-	-		12	CL1 = SL1-78			12	CH = SH-122			-	-			-	-			12	CL1 = SL1-78			12	CH = SH-106			-	-			-	-		
			77BF-102-18				1FL + 4FH					1FL																										
			77BF-103-18																																		
	6B & 6C	77BF-111-18	77BF-101-18				2FL + 4FH					-																										
			77BF-102-18				1FL + 4FH					1FL																										
			77BF-103-18																																		
	6A*	77BF-111-18 + 77BF-401-18	77BF-101-18				2FL + 6FH					-																										
			77BF-102-18				1FL + 6FH					1FL																										
			77BF-103-18																																		
	6B & 6C	77BF-111-18 + 77BF-401-18	77BF-101-18				2FL + 6FH					-																										
			77BF-102-18				1FL + 6FH					1FL																										
			77BF-103-18																																		
6 + 0	3A	77BF-111-18	77BF-101-18	1FL + 11FH	1FL + 11FH	FL	2FL + 2FH	FH	10 (CL1+CH1) + 2 (CL2 +CH2)	10 (CL1+CH1) + 2 (CL2 +CH2)	10 (CL1+CH1) + 2 (CL2 +CH2)	-	2 FL	5	GL1 = SL1-98	GH = SH-98		1	GL2 = SL2-98	GH = SH-98		5	GL1 = SL1-88	GH = SH-88		1	GL2 = SL2-88	GH = SH-88		10	CL1 = SL1-78			10	CH = SH-122			2	CL2 = SL2-78			2	CH = SH-122			10	CL1 = SL1-78			10	CH = SH-106			2	CL2 = SL2-78			2	CH = SH-106		
			77BF-102-18				1FL + 2FH					1FL																										
			77BF-103-18				1FL + 2FH					-																										
		77BF-111-18 + 77BF-401-18	77BF-101-18				2FL + 4FH					1FL																										
			77BF-102-18				1FL + 4FH					-																										
			77BF-103-18				1FL + 4FH					1FL																										
4 + 3	7A	77BF-111-18	77BF-101-18	1FL + 12FH	1FL + 12FH	FL	2FL + 4FH	-	12 (CL1+CH1) + 2 (CL2 +CH2)	12 (CL1+CH1) + 2 (CL2 +CH2)	12 (CL1+CH1) + 2 (CL2 +CH2)	-	2 FL	6	GL1 = SL1-98	GH = SH-98		1	GL2 = SL2-98	GH = SH-98		6	GL1 = SL1-88	GH = SH-88		1	GL2 = SL2-88	GH = SH-88		12	CL1 = SL1-78			12	CH = SH-122			2	CL2 = SL2-78			2	CH = SH-122			12	CL1 = SL1-78			12	CH = SH-106			2	CL2 = SL2-78			2	CH = SH-106		
			77BF-102-18				1FL + 4FH					1FL																										
			77BF-103-18																																		
	7B & 7C	77BF-111-18	77BF-101-18				2FL + 4FH					-																										
			77BF-102-18				1FL + 4FH					1FL																										
			77BF-103-18																																		
	7A*	77BF-111-18 + 77BF-401-18	77BF-101-18				2FL + 6FH					-																										
			77BF-102-18				1FL + 6FH					1FL																										
			77BF-103-18																																		
	7B & 7C	77BF-111-18 + 77BF-401-18	77BF-101-18				2FL + 6FH					-																										
			77BF-102-18				1FL + 6FH					1FL																										
			77BF-103-18																																		
5 + 2	7A	77BF-111-18	77BF-101-18	1FL + 12FH	1FL + 12FH	FL	2FL + 4FH	-	12 (CL1+CH1) + 2 (CL2 +CH2)	12 (CL1+CH1) + 2 (CL2 +CH2)	12 (CL1+CH1) + 2 (CL2 +CH2)	-	2 FL	6	GL1 = SL1-98	GH = SH-98		1	GL2 = SL2-98	GH = SH-98		6	GL1 = SL1-88	GH = SH-88		1	GL2 = SL2-88	GH = SH-88		12	CL1 = SL1-78			12	CH = SH-122			2	CL2 = SL2-78			2	CH = SH-122			12	CL1 = SL1-78			12	CH = SH-106			2	CL2 = SL2-78			2	CH = SH-106		
			77BF-102-18				1FL + 4FH					1FL																										
			77BF-103-18																																		
	7B & 7C	77BF-111-18	77BF-101-18				2FL + 4FH					-																										
			77BF-102-18				1FL + 4FH					1FL																										
			77BF-103-18																																		
	7A*	77BF-111-18 + 77BF-401-18	77BF-101-18				2FL + 6FH					-																										
			77BF-102-18				1FL + 6FH					1FL																										
			77BF-103-18																																		
	7B & 7C	77BF-111-18 + 77BF-401-18	77BF-101-18				2FL + 6FH					-																										
			77BF-102-18				1FL + 6FH					1FL																										
			77BF-103-18																																		

CUTTING SIZE LIST / KESİM ÖLÇÜ LİSTESİ

90° CUTTING SIZE
KESİM ÖLÇÜLERİ

OPENING TYPE AÇILIM TİPİ	SECTION TYPE DETAY TİPİ	VERTICAL PROFILE DÜŞEY PROFİL	BOTTOM DETAIL TYPE ALT DETAY TİPİ	HORIZONTAL FRAME YATAY KASA 77BF-101-18		HORIZONTAL FRAME YATAY KASA 77BF-102-18		HORIZONTAL FRAME YATAY KASA 77BF-103-18		VERTICAL FRAME DÜŞEY KASA 77BF-111-18		ADJUSTING ADAPTER AYAR ADAPTÖRÜ 77BF-401-18		HORIZONTAL SASH 1 YATAY KANAT 1 77BF-201-18		HORIZONTAL SASH 2 YATAY KANAT 2 77BF-201-18		VERTICAL SASH DÜŞEY KANAT 77BF-201-18		FRAME ADAPTER KASA ADAPTÖRÜ 77BF-402-00		HORIZONTAL SASH ADAPTER 1 YATAY KANAT ADAPTÖRÜ 1 77BF-501-00 / H1		HORIZONTAL SASH ADAPTER 2 YATAY KANAT ADAPTÖRÜ 2 77BF-501-00 H2		HORIZONTAL SASH ADAPTER 3 YATAY KANAT ADAPTÖRÜ 3 77BF-501-00 / H3		VERTICAL SASH ADAPTER 1 DÜŞEY KANAT ADAPTÖRÜ 1 77BF-501-00 / V1		VERTICAL SASH ADAPTER 2 DÜŞEY KANAT ADAPTÖRÜ 2 77BF-501-00 / V2		ADAPTER 1 ADAPTÖR 1 77BF-502-00 / 1		ADAPTER 2 ADAPTÖR 2 77BF-502-00 / 2		ADAPTER 1 ADAPTÖR 1 77BF-503-00 / 1		ADAPTER 2 ADAPTÖR 2 77BF-503-00 / 2	
				QUANTITY ANGULAR MİKTAR / AÇI	FORMULA / FORMÜL	QUANTITY ANGULAR MİKTAR / AÇI	FORMULA / FORMÜL	QUANTITY ANGULAR MİKTAR / AÇI	FORMULA / FORMÜL	QUANTITY ANGULAR MİKTAR / AÇI	FORMULA / FORMÜL	QUANTITY ANGULAR MİKTAR / AÇI	FORMULA / FORMÜL	QUANTITY ANGULAR MİKTAR / AÇI	FORMULA / FORMÜL	QUANTITY ANGULAR MİKTAR / AÇI	FORMULA / FORMÜL	QUANTITY ANGULAR MİKTAR / AÇI	FORMULA / FORMÜL	QUANTITY ANGULAR MİKTAR / AÇI	FORMULA / FORMÜL	QUANTITY ANGULAR MİKTAR / AÇI	FORMULA / FORMÜL	QUANTITY ANGULAR MİKTAR / AÇI	FORMULA / FORMÜL	QUANTITY ANGULAR MİKTAR / AÇI	FORMULA / FORMÜL	QUANTITY ANGULAR MİKTAR / AÇI	FORMULA / FORMÜL	QUANTITY ANGULAR MİKTAR / AÇI	FORMULA / FORMÜL	QUANTITY ANGULAR MİKTAR / AÇI	FORMULA / FORMÜL	QUANTITY ANGULAR MİKTAR / AÇI	FORMULA / FORMÜL
4 + 2	8A	77BF-111-18	77BF-101-18	2 90° 1 90°	FL-44	1 90°	FL-44	1 90°	FL-44	2 90°	FH			8 45°	SL1 = ((FL-156)/6)-15,3	4 45°	SL2=SL1+51	12 45°	SH = FH-92	1 90° 2 90°	FL-44	8 90°	SL1-12	4 90°/45°	SL2+8	-	-	2 90° / 45°	SH+14	2 90° / 45°	SH+7	1 90°	SH+6	1 90°	SH-14	-	-	-	-
			77BF-102-18	1 90°															SH = FH-92															SH-10				
			77BF-103-18	1 90°															SH = FH-77															SH-14				
		77BF-111-18 + 77BF-401-18	77BF-101-18	2 90°								2 90°	FH-54						SH = FH-92															SH-10				
			77BF-102-18	1 90°	FL-44	1 90°	FL-44						FH-27						SH = FH-92															SH-14				
			77BF-103-18	1 90°				1 90°	FL-44				FH-39						SH = FH-77															SH-10				
5 + 1	6A	77BF-111-18	77BF-101-18	2 90°		1 90°	FL-44	1 90°	FL-44	2 90°	FH			12 45°	SL1 = (FL-128)/6	-	-	12 45°	SH = FH-92	1 90° 2 90°	FL-44	12 90°	SL1-12	-	-	-	-	-	-	-	-	1 90°	SH+6	1 90°	SH-14	-	-	-	-
			77BF-102-18	1 90°															SH = FH-92															SH-10				
			77BF-103-18	1 90°															SH = FH-77															SH-14				
	6B & 6C	77BF-111-18	77BF-101-18	2 90°		1 90°	FL-44	1 90°	FL-44					12 45°	SL1 = (FL-156)/6				SH = FH-92	1 90° 2 90°	FL-44	8 90°	SL1-12			4 90° / 45°	SL1+8	2 90° / 45°	SH+14	2 90° / 45°	SH+7				SH-10	2 90°	SH+1		
			77BF-102-18	1 90°															SH = FH-92															SH-14				
			77BF-103-18	1 90°															SH = FH-77															SH-10				
	6A*	77BF-111-18 + 77BF-401-18	77BF-101-18	2 90°		1 90°	FL-44	1 90°	FL-44	2 90°	FH	2 90°	FH-54						SH = FH-92	1 90° 2 90°	FL-96	12 90°	SL1-12	-	-	-	-	-	-	-	-				SH-14				
			77BF-102-18	1 90°									FH-27						SH = FH-92															SH-10				
			77BF-103-18	1 90°									FH-39						SH = FH-77															SH-14				
	6B & 6C	77BF-111-18 + 77BF-401-18	77BF-101-18	2 90°		1 90°	FL-44	1 90°	FL-44			2 90°	FH-54						SH = FH-92	1 90° 2 90°	FL-96	8 90°	SL1-12	4 90° / 45°	SL1+8	2 90° / 45°	SH+14	2 90° / 45°	SH+7				SH-10	2 90°	SH+1		
			77BF-102-18	1 90°									FH-27						SH = FH-92															SH-14				
			77BF-103-18	1 90°									FH-39						SH = FH-77															SH-10				
6 + 0	3A	77BF-111-18	77BF-101-18	2 90°	FL-44	1 90°	FL-44	1 90°	FL-44	2 90°	FH			10 45°	SL1 = ((FL-142)/6)-7,6	2 45°	SL2=SL1+51	12 45°	SH = FH-92	1 90° 2 90°	FL-44	10 90°	SL1-12	2 90°/45°	SL2+8	-	-	1 90° / 45°	SH+14	1 90° / 45°	SH+7	1 90°	SH+6	-	-	-	-	-	-
			77BF-102-18	1 90°															SH = FH-92																			
			77BF-103-18	1 90°															SH = FH-77																			
		77BF-111-18 + 77BF-401-18	77BF-101-18	2 90°								2 90°	FH-54						SH = FH-92																			
			77BF-102-18	1 90°	FL-44	1 90°	FL-44						FH-27						SH = FH-92																			
			77BF-103-18	1 90°				1 90°	FL-44				FH-39						SH = FH-77																			
4 + 3	7A	77BF-111-18	77BF-101-18	2 90°	FL-44	1 90°	FL-44	1 90°	FL-44	2 90°	FH			12 45°	SL1 = ((FL-154)/7)-6,6	2 45°	SL2=SL1+51	14 45°	SH = FH-92	1 90° 2 90°	FL-44	12 90°	SL1-12	2 90°/45°	SL2+8	-	-	1 90° / 45°	SH+14	1 90° / 45°	SH+7	1 90°	SH+6	1 90°	SH-14	-	-	-	-
			77BF-102-18	1 90°															SH = FH-92															SH-10				
			77BF-103-18	1 90°															SH = FH-77															SH-14				
	7B & 7C	77BF-111-18	77BF-101-18	2 90°		1 90°	FL-44	1 90°	FL-44					12 45°	SL1 = ((FL-168)/7)-6,6				SH = FH-92	1 90° 2 90°	FL-44	10 90°	SL1-12			2 90° / 45°	SL1+8	2 90° / 45°	SH+14	2 90° / 45°	SH+7				SH-10	1 90°	SH+1	1 90°	SH-280
			77BF-102-18	1 90°															SH = FH-92															SH-14				
			77BF-103-18	1 90°															SH = FH-77															SH-10				
	7A*	77BF-111-18 + 77BF-401-18	77BF-101-18	2 90°		1 90°	FL-44	1 90°	FL-44	2 90°	FH	2 90°	FH-54						SH = FH-92	1 90° 2 90°	FL-96	12 90°	SL1-12	-	-	-	-	1 90° / 45°	SH+14	1 90° / 45°	SH+7				SH-14				
			77BF-102-18	1 90°									FH-27						SH = FH-92															SH-10				
			77BF-103-18	1 90°									FH-39						SH = FH-77															SH-14				
	7B & 7C	77BF-111-18 + 77BF-401-18	77BF-101-18	2 90°		1 90°	FL-44	1 90°	FL-44			2 90°	FH-54						SH = FH-92	1 90° 2 90°	FL-96	10 90°	SL1-12	2 90° / 45°	SL1+8	2 90° / 45°	SH+14	2 90° / 45°	SH+7				SH-10	1 90°	SH+1	1 90°	SH-280
			77BF-102-18	1 90°									FH-27						SH = FH-92															SH-14				
			77BF-103-18	1 90°									FH-39						SH = FH-77															SH-10				
5 + 2	7A	77BF-111-18	77BF-101-18	2 90°	FL-44	1 90°	FL-44	1 90°	FL-44	2 90°	FH			12 45°	SL1 = ((FL-154)/7)-6,6	2 45°	SL2=SL1+51	14 45°	SH = FH-92	1 90° 2 90°	FL-44	12 90°	SL1-12	2 90°/45°	SL2+8	-	-	1 90° / 45°	SH+14	1 90° / 45°	SH+7	1 90°	SH+6	1 90°	SH-14	-	-	-	-
			77BF-102-18	1 90°															SH = FH-92															SH-10				
			77BF-103-18	1 90°															SH = FH-77															SH-14				
	7B & 7C	77BF-111-18	77BF-101-18	2 90°		1 90°	FL-44	1 90°	FL-44					12 45°	SL1 = ((FL-168)/7)-6,6				SH = FH-92	1 90° 2 90°	FL-44	10 90°	SL1-12			2 90° / 45°	SL1+8	2 90° / 45°	SH+14	2 90° / 45°	SH+7				SH-10	1 90°	SH+1	1 90°	SH-280
			77BF-102-18	1 90°															SH = FH-92															SH-14				
			77BF-103-18	1 90°															SH = FH-77															SH-10				
	7A*	77BF-111-18 + 77BF-401-18	77BF-101-18	2 90°		1 90°	FL-44	1 90°	FL-44	2 90°	FH	2 90°	FH-54						SH = FH-92	1 90° 2 90°	FL-96	12 90°	SL1-12	-	-	-	-	1 90° / 45°	SH+14	1 90° / 45°	SH+7				SH-14				
			77BF-102-18	1 90°									FH-27						SH = FH-92															SH-10				
			77BF-103-18	1 90°									FH-39						SH = FH-77															SH-14				
	7B & 7C	77BF-111-18 + 77BF-401-18	77BF-101-18	2 90°		1 90°	FL-44	1 90°	FL-44			2 90°	FH-54						SH = FH-92	1 90° 2 90°	FL-96	10 90°	SL1-12	2 90° / 45°	SL1+8	2 90° / 45°	SH+14	2 90° / 45°	SH+7				SH-10	1 90°	SH+1	1 90°	SH-280
			77BF-102-18	1 90°									FH-27						SH = FH-92															SH-14				
			77BF-103-18	1 90°									FH-39						SH = FH-77															SH-10				

CUTTING SIZE LIST / KESİM ÖLÇÜ LİSTESİ

90° CUTTING SIZE / KESİM ÖLÇÜLERİ

OPENING TYPE AÇILIM TİPİ	SECTION TYPE DETAY TİPİ	VERTICAL PROFILE DÜŞEY PROFİL	BOTTOM DETAIL TYPE ALT DETAY TİPİ	EM77BF-01	EM77BF-02	EM77BF-03	EM3-03	EM3-01	EM2-03	EM1-XX	O.RING-3 mm	AC77BF-421	EM45-05
6 + 1	7A	77BF-111-18	77BF-101-18	1FL + 12FH	1FL + 12FH	FL	2FL + 4FH	-	12 (CL1+CH1) + 2 (CL2 +CH2)	12 (CL1+CH1) + 2 (CL2 +CH2)	12 (CL1+CH1) + 2 (CL2 +CH2)	-	2 FL
			77BF-102-18				1FL + 4FH					1FL	
			77BF-103-18				2FL + 4FH					-	
	7B & 7C	77BF-111-18	77BF-101-18				1FL + 4FH					1FL	
			77BF-102-18				2FL + 6FH					-	
			77BF-103-18				1FL + 6FH					1FL	
	7A*	77BF-111-18 + 77BF-401-18	77BF-101-18				2FL + 6FH					-	
			77BF-102-18				1FL + 6FH					1FL	
			77BF-103-18										
	7B & 7C	77BF-111-18 + 77BF-401-18	77BF-101-18				2FL + 6FH					-	
			77BF-102-18				1FL + 6FH					1FL	
			77BF-103-18										
7 + 0	2A	77BF-111-18	77BF-101-18	1FL + 13FH	1FL + 13FH	FL	2FL + 3FH	-	14 (CL1+CH1)	14 (CL1+CH1)	14 (CL1+CH1)	-	2 FL
			77BF-102-18				1FL + 3FH					1FL	
			77BF-103-18				2FL + 3FH					-	
	2B & 2C	77BF-111-18	77BF-101-18				1FL + 3FH					1FL	
			77BF-102-18				2FL + 5FH					-	
			77BF-103-18				1FL + 5FH					1FL	
	2A*	77BF-111-18 + 77BF-401-18	77BF-101-18				2FL + 5FH					-	
			77BF-102-18				1FL + 5FH					1FL	
			77BF-103-18										
	2B & 2C	77BF-111-18 + 77BF-401-18	77BF-101-18				2FL + 5FH					-	
			77BF-102-18				1FL + 5FH					1FL	
			77BF-103-18										
4 + 4	8A	77BF-111-18	77BF-101-18	1FL + 14FH	1FL + 14FH	FL	2FL + 3FH	FH	12 (CL1+CH1) + 4 (CL2 +CH2)	12 (CL1+CH1) + 4 (CL2 +CH2)	12 (CL1+CH1) + 4 (CL2 +CH2)	-	2 FL
			77BF-102-18				1FL + 3FH					1FL	
			77BF-103-18				2FL + 5FH					-	
		77BF-111-18 + 77BF-401-18	77BF-101-18				1FL + 5FH					1FL	
			77BF-102-18										
			77BF-103-18										
5 + 3	6A	77BF-111-18	77BF-101-18	1FL + 14FH	1FL + 14FH	FL	2FL + 4FH	-	16 (CL1+CH1)	16 (CL1+CH1)	16 (CL1+CH1)	-	2 FL
			77BF-102-18				1FL + 4FH					1FL	
			77BF-103-18				2FL + 4FH					-	
	6B & 6C	77BF-111-18	77BF-101-18				1FL + 4FH					1FL	
			77BF-102-18				2FL + 6FH					-	
			77BF-103-18				1FL + 6FH					1FL	
	6A*	77BF-111-18 + 77BF-401-18	77BF-101-18				2FL + 6FH					-	
			77BF-102-18				1FL + 6FH					1FL	
			77BF-103-18										
	6B & 6C	77BF-111-18 + 77BF-401-18	77BF-101-18				2FL + 6FH					-	
			77BF-102-18				1FL + 6FH					1FL	
			77BF-103-18										

GLASS / CAM 77BF-201-18

GL1 QUANTITY MİKTAR	GL1 FORMULA FORMÜL Horizontal / Yatay	GL1 FORMULA FORMÜL Vertical / Düşey	GL2 QUANTITY MİKTAR	GL2 FORMULA FORMÜL Horizontal / Yatay	GL2 FORMULA FORMÜL Vertical / Düşey
6	GL1 = SL1-98	GH = SH-98	1	GL2 = SL2-98	GH = SH-98
7	GL1 = SL1-98	GH = SH-98	-	-	-
6	GL1 = SL1-98	GH = SH-98	2	GL2 = SL2-98	GH = SH-98
8	GL1 = SL1-98	GH = SH-98	-	-	-

GLASS / CAM 77BF-202-18

GL1 QUANTITY MİKTAR	GL1 FORMULA FORMÜL Horizontal / Yatay	GL1 FORMULA FORMÜL Vertical / Düşey	GL2 QUANTITY MİKTAR	GL2 FORMULA FORMÜL Horizontal / Yatay	GL2 FORMULA FORMÜL Vertical / Düşey
6	GL1 = SL1-88	GH = SH-88	1	GL2 = SL2-88	GH = SH-88
7	GL1 = SL1-88	GH = SH-88	-	-	-
6	GL1 = SL1-88	GH = SH-88	2	GL2 = SL2-88	GH = SH-88
8	GL1 = SL1-88	GH = SH-88	-	-	-

GLAZING BEAD / CAM ÇİTASI 77BF-201-18

CL1 QUANTITY MİKTAR	CL1 FORMULA FORMÜL Horizontal / Yatay	CH QUANTITY MİKTAR	CH FORMULA FORMÜL Vertical / Düşey	CL2 QUANTITY MİKTAR	CL2 FORMULA FORMÜL Horizontal / Yatay	CH QUANTITY MİKTAR	CH FORMULA FORMÜL Vertical / Düşey
12	CL1 = SL1-78	12	CH = SH-122	2	CL2 = SL2-78	2	CH = SH-122
14	CL1 = SL1-78	14	CH = SH-122	-	-	-	-
12	CL1 = SL1-78	12	CH = SH-122	4	CL2 = SL2-78	4	CH = SH-122
16	CL1 = SL1-78	16	CH = SH-122	-	-	-	-

GLAZING BEAD / CAM ÇİTASI 77BF-202-18

CL1 QUANTITY MİKTAR	CL1 FORMULA FORMÜL Horizontal / Yatay	CH QUANTITY MİKTAR	CH FORMULA FORMÜL Vertical / Düşey	CL2 QUANTITY MİKTAR	CL2 FORMULA FORMÜL Horizontal / Yatay	CH QUANTITY MİKTAR	CH FORMULA FORMÜL Vertical / Düşey
12	CL1 = SL1-78	12	CH = SH-106	2	CL2 = SL2-78	2	CH = SH-106
14	CL1 = SL1-78	14	CH = SH-106	-	-	-	-
12	CL1 = SL1-78	12	CH = SH-106	4	CL2 = SL2-78	4	CH = SH-106
16	CL1 = SL1-78	16	CH = SH-106	-	-	-	-

CUTTING SIZE LIST / KESİM ÖLÇÜ LİSTESİ

90° CUTTING SIZE
KESİM ÖLÇÜLERİ

OPENING TYPE AÇILIM TİPİ	SECTION TYPE DETAY TİPİ	VERTICAL PROFILE DÜŞEY PROFİL	BOTTOM DETAIL TYPE ALT DETAY TİPİ	HORIZONTAL FRAME YATAY KASA 77BF-101-18		HORIZONTAL FRAME YATAY KASA 77BF-102-18		HORIZONTAL FRAME YATAY KASA 77BF-103-18		VERTICAL FRAME DÜŞEY KASA 77BF-111-18		ADJUSTING ADAPTER AYAR ADAPTÖRÜ 77BF-401-18		HORIZONTAL SASH 1 YATAY KANAT 1 77BF-201-18		HORIZONTAL SASH 2 YATAY KANAT 2 77BF-201-18		VERTICAL SASH DÜŞEY KANAT 77BF-201-18		FRAME ADAPTER KASA ADAPTÖRÜ 77BF-402-00		HORIZONTAL SASH ADAPTER 1 YATAY KANAT ADAPTÖRÜ 1 77BF-501-00 / H1		HORIZONTAL SASH ADAPTER 2 YATAY KANAT ADAPTÖRÜ 2 77BF-501-00 H2		HORIZONTAL SASH ADAPTER 3 YATAY KANAT ADAPTÖRÜ 3 77BF-501-00 / H3		VERTICAL SASH ADAPTER 1 DÜŞEY KANAT ADAPTÖRÜ 1 77BF-501-00 / V1		VERTICAL SASH ADAPTER 2 DÜŞEY KANAT ADAPTÖRÜ 2 77BF-501-00 / V2		ADAPTER 1 ADAPTÖR 1 77BF-502-00 / 1		ADAPTER 2 ADAPTÖR 2 77BF-502-00 / 2		ADAPTER 1 ADAPTÖR 1 77BF-503-00 / 1		ADAPTER 2 ADAPTÖR 2 77BF-503-00 / 2	
				QUANTITY ANGULAR MİKTAR / AÇI	FORMULA / FORMÜL	QUANTITY ANGULAR MİKTAR / AÇI	FORMULA / FORMÜL	QUANTITY ANGULAR MİKTAR / AÇI	FORMULA / FORMÜL	QUANTITY ANGULAR MİKTAR / AÇI	FORMULA / FORMÜL	QUANTITY ANGULAR MİKTAR / AÇI	FORMULA / FORMÜL	QUANTITY ANGULAR MİKTAR / AÇI	FORMULA / FORMÜL	QUANTITY ANGULAR MİKTAR / AÇI	FORMULA / FORMÜL	QUANTITY ANGULAR MİKTAR / AÇI	FORMULA / FORMÜL	QUANTITY ANGULAR MİKTAR / AÇI	FORMULA / FORMÜL	QUANTITY ANGULAR MİKTAR / AÇI	FORMULA / FORMÜL	QUANTITY ANGULAR MİKTAR / AÇI	FORMULA / FORMÜL	QUANTITY ANGULAR MİKTAR / AÇI	FORMULA / FORMÜL	QUANTITY ANGULAR MİKTAR / AÇI	FORMULA / FORMÜL	QUANTITY ANGULAR MİKTAR / AÇI	FORMULA / FORMÜL	QUANTITY ANGULAR MİKTAR / AÇI	FORMULA / FORMÜL	QUANTITY ANGULAR MİKTAR / AÇI	FORMULA / FORMÜL
6 + 1	7A	77BF-111-18	77BF-101-18	2 90°	FL-44	1 90°	FL-44	1 90°	FL-44	2 90°	FH			12 45°	SL1 = ((FL-154)/7)-6,6	2 45°	SL2=SL1+51	14 45°	SH = FH-92	1 90°	FL-44	12 90°	SL1-12			-	-	1 90° / 45°	SH+14	1 90° / 45°	SH+7	1 90°	SH+6	1 90°	SH-14	-	-	-	-
			77BF-102-18	1 90°															SH = FH-92	2 90°														SH-10				
			77BF-103-18	1 90°															SH = FH-77	2 90°														SH-14				
	7B & 7C	77BF-111-18	77BF-101-18	2 90°	FL-44	1 90°	FL-44	1 90°	FL-44										SH = FH-92	1 90°	FL-44	10 90°	SL1-12			2 90° / 45°	SL1+8	2 90° / 45°	SH+14	2 90° / 45°	SH+7				SH-10	1 90°	SH+1	1 90°	SH-280
			77BF-102-18	1 90°															SH = FH-92	2 90°														SH-14				
			77BF-103-18	1 90°															SH = FH-77	2 90°														SH-10				
	7A*	77BF-111-18 + 77BF-401-18	77BF-101-18	2 90°	FL-44	1 90°	FL-44	1 90°	FL-44			2 90°	FH-54						SH = FH-92	1 90°	FL-96	12 90°	SL1-12			-	-	1 90° / 45°	SH+14	1 90° / 45°	SH+7				SH-14	-	-	-	-
			77BF-102-18	1 90°								2 90°	FH-27						SH = FH-92	2 90°														SH-10				
			77BF-103-18	1 90°								2 90°	FH-39						SH = FH-77	2 90°														SH-14				
	7B & 7C	77BF-111-18 + 77BF-401-18	77BF-101-18	2 90°	FL-44	1 90°	FL-44	1 90°	FL-44			2 90°	FH-54						SH = FH-92	1 90°	FL-96	10 90°	SL1-12			2 90° / 45°	SL1+8	2 90° / 45°	SH+14	2 90° / 45°	SH+7				SH-10	1 90°	SH+1	1 90°	SH-280
			77BF-102-18	1 90°								2 90°	FH-27						SH = FH-92	2 90°														SH-14				
			77BF-103-18	1 90°								2 90°	FH-39						SH = FH-77	2 90°														SH-10				
7 + 0	2A	77BF-111-18	77BF-101-18	2 90°	FL-44	1 90°	FL-44	1 90°	FL-44	2 90°	FH			14 45°	SL1 = (FL-140)/7	-	-	14 45°	SH = FH-92	1 90°	FL-44	14 90°	SL1-12	-	-	-	-	-	-	-	-	-	-	-	-	-	-	-	-
			77BF-102-18	1 90°															SH = FH-92	2 90°																		
			77BF-103-18	1 90°															SH = FH-77	2 90°																		
	2B & 2C	77BF-111-18	77BF-101-18	2 90°	FL-44	1 90°	FL-44	1 90°	FL-44						SL1 = (FL-154)/7				SH = FH-92	1 90°	FL-44	12 90°	SL1-12			2 90° / 45°	SL1+8	1 90° / 45°	SH+14	1 90° / 45°	SH+7	1 90°	SH+6			1 90°	SH+1	-	-
			77BF-102-18	1 90°															SH = FH-92	2 90°																		
			77BF-103-18	1 90°															SH = FH-77	2 90°																		
	2A*	77BF-111-18 + 77BF-401-18	77BF-101-18	2 90°	FL-44	1 90°	FL-44	1 90°	FL-44			2 90°	FH-54						SH = FH-92	1 90°	FL-96	14 90°	SL1-12			-	-	-	-	-	-					-	-	-	-
			77BF-102-18	1 90°								2 90°	FH-27						SH = FH-92	2 90°																		
			77BF-103-18	1 90°								2 90°	FH-39						SH = FH-77	2 90°																		
	2B & 2C	77BF-111-18 + 77BF-401-18	77BF-101-18	2 90°	FL-44	1 90°	FL-44	1 90°	FL-44			2 90°	FH-54						SH = FH-92	1 90°	FL-96	12 90°	SL1-12			2 90° / 45°	SL1+8	1 90° / 45°	SH+14	1 90° / 45°	SH+7					1 90°	SH+1	-	-
			77BF-102-18	1 90°								2 90°	FH-27						SH = FH-92	2 90°																		
			77BF-103-18	1 90°								2 90°	FH-39						SH = FH-77	2 90°																		
4 + 4	8A	77BF-111-18	77BF-101-18	2 90°	FL-44	1 90°	FL-44	1 90°	FL-44	2 90°	FH			12 45°	SL1 = ((FL-180)/8)-11,5	4 45°	SL2=SL1+51	16 45°	SH = FH-92	1 90°	FL-44	12 90°	SL1-12	4 90°/45°	SL2+8	-	-	2 90° / 45°	SH+14	2 90° / 45°	SH+7	1 90°	SH+6	1 90°	SH-14	-	-	-	-
			77BF-102-18	1 90°															SH = FH-92	2 90°														SH-10				
			77BF-103-18	1 90°															SH = FH-77	2 90°														SH-14				
		77BF-111-18 + 77BF-401-18	77BF-101-18	2 90°	FL-44	1 90°	FL-44	1 90°	FL-44			2 90°	FH-54						SH = FH-92	1 90°	FL-96																	
			77BF-102-18	1 90°								2 90°	FH-27						SH = FH-92	2 90°																		
			77BF-103-18	1 90°								2 90°	FH-39						SH = FH-77	2 90°																		
5 + 3	6A	77BF-111-18	77BF-101-18	2 90°	FL-44	1 90°	FL-44	1 90°	FL-44	2 90°	FH			16 45°	SL1 = (FL-152)/8	-	-	16 45°	SH = FH-92	1 90°	FL-44	16 90°	SL1-12	-	-	-	-	-	-	-	-	-	-	-	-	-	-	-	-
			77BF-102-18	1 90°															SH = FH-92	2 90°																		
			77BF-103-18	1 90°															SH = FH-77	2 90°																		
	6B & 6C	77BF-111-18	77BF-101-18	2 90°	FL-44	1 90°	FL-44	1 90°	FL-44						SL1 = (FL-180)/8				SH = FH-92	1 90°	FL-44	12 90°	SL1-12			4 90° / 45°	SL1+8	2 90° / 45°	SH+14	2 90° / 45°	SH+7	1 90°	SH+6			2 90°	SH+1	-	-
			77BF-102-18	1 90°															SH = FH-92	2 90°																		
			77BF-103-18	1 90°															SH = FH-77	2 90°																		
	6A*	77BF-111-18 + 77BF-401-18	77BF-101-18	2 90°	FL-44	1 90°	FL-44	1 90°	FL-44			2 90°	FH-54						SH = FH-92	1 90°	FL-96	16 90°	SL1-12			-	-	-	-	-	-					-	-	-	-
			77BF-102-18	1 90°								2 90°	FH-27						SH = FH-92	2 90°																		
			77BF-103-18	1 90°								2 90°	FH-39						SH = FH-77	2 90°																		
	6B & 6C	77BF-111-18 + 77BF-401-18	77BF-101-18	2 90°	FL-44	1 90°	FL-44	1 90°	FL-44			2 90°	FH-54						SH = FH-92	1 90°	FL-96	12 90°	SL1-12			4 90° / 45°	SL1+8	2 90° / 45°	SH+14	2 90° / 45°	SH+7					2 90°	SH+1	-	-
			77BF-102-18	1 90°								2 90°	FH-27						SH = FH-92	2 90°																		
			77BF-103-18	1 90°								2 90°	FH-39						SH = FH-77	2 90°																		

CUTTING SIZE LIST / KESİM ÖLÇÜ LİSTESİ

90° CUTTING SIZE / KESİM ÖLÇÜLERİ				GASKETS / FİTİLLER										GLASS / CAM 77BF-201-18				GLASS / CAM 77BF-202-18				GLAZING BEAD / CAM ÇİTASI 77BF-201-18								GLAZING BEAD / CAM ÇİTASI 77BF-202-18							
														GL1				GL2				GL1				GL2				CL1				CH			
OPENING TYPE AÇILIM TİPİ	SECTION TYPE DETAY TİPİ	VERTICAL PROFILE DÜŞEY PROFİL	BOTTOM DETAIL TYPE ALT DETAY TİPİ	EM77BF-01	EM77BF-02	EM77BF-03	EM3-03	EM3-01	EM2-03	EM1-XX	O.RING-3 mm	AC77BF-421	EM45-05	QUANTITY MİKTAR	FORMULA FORMÜL Horizontal / Yatay	FORMULA FORMÜL Vertical / Düşey		QUANTITY MİKTAR	FORMULA FORMÜL Horizontal / Yatay	FORMULA FORMÜL Vertical / Düşey		QUANTITY MİKTAR	FORMULA FORMÜL Horizontal / Yatay	FORMULA FORMÜL Vertical / Düşey		QUANTITY MİKTAR	FORMULA FORMÜL Horizontal / Yatay	FORMULA FORMÜL Vertical / Düşey		QUANTITY MİKTAR	FORMULA FORMÜL Horizontal / Yatay	FORMULA FORMÜL Vertical / Düşey		QUANTITY MİKTAR	FORMULA FORMÜL Horizontal / Yatay	FORMULA FORMÜL Vertical / Düşey	
6 + 2	8A	77BF-111-18	77BF-101-18	1FL + 14FH	1FL + 14FH	FL	2FL + 3FH	FH	12 (CL1+CH1) + 4 (CL2 +CH2)	12 (CL1+CH1) + 4 (CL2 +CH2)	12 (CL1+CH1) + 4 (CL2 +CH2)	-	2 FL	6	GL1 = SL1-98	GH = SH-98		2	GL2 = SL2-98	GH = SH-98		6	GL1 = SL1-88	GH = SH-88		2	GL2 = SL2-88	GH = SH-88		12	CL1 = SL1-78			12	CH = SH-122			4	CL2 = SL2-78			4	CH = SH-122			12	CL1 = SL1-78			12	CH = SH-106			4	CL2 = SL2-78			4	CH = SH-106		
			77BF-102-18									1FL																																					
			77BF-103-18				1FL + 3FH					-																																						
		77BF-111-18 + 77BF-401-18	77BF-101-18				2FL + 5FH					-																																					
			77BF-102-18									1FL																																					
			77BF-103-18				1FL + 5FH					1FL																																					
7 + 1	6A	77BF-111-18	77BF-101-18	1FL + 14FH	1FL + 14FH	FL	2FL + 4FH	-	16 (CL1+CH1)	16 (CL1+CH1)	16 (CL1+CH1)	-	2 FL	8	GL1 = SL1-98	GH = SH-98		-	-	-		8	GL1 = SL1-88	GH = SH-88		-	-	-		16	CL1 = SL1-78			16	CH = SH-122			-	-			-	-			16	CL1 = SL1-78			16	CH = SH-106			-	-			-	-		
			77BF-102-18									1FL																																					
			77BF-103-18				1FL + 4FH					-																																					
	6B & 6C	77BF-111-18	77BF-101-18				2FL + 4FH					1FL																																					
			77BF-102-18				1FL + 4FH					-																																					
			77BF-103-18				2FL + 6FH					1FL																																					
	6A*	77BF-111-18 + 77BF-401-18	77BF-101-18				1FL + 6FH					-																																					
			77BF-102-18									1FL																																					
			77BF-103-18				2FL + 6FH					-																																					
	6B & 6C	77BF-111-18 + 77BF-401-18	77BF-101-18				1FL + 6FH					1FL																																					
			77BF-102-18																																													
			77BF-103-18																																													
5 + 4	7A	77BF-111-18	77BF-101-18	1FL + 16FH	1FL + 16FH	FL	2FL + 4FH	-	16 (CL1+CH1) + 2 (CL2 +CH2)	16 (CL1+CH1) + 2 (CL2 +CH2)	16 (CL1+CH1) + 2 (CL2 +CH2)	-	2 FL	8	GL1 = SL1-98	GH = SH-98		1	GL2 = SL2-98	GH = SH-98		8	GL1 = SL1-88	GH = SH-88		1	GL2 = SL2-88	GH = SH-88		16	CL1 = SL1-78			16	CH = SH-122			2	CL2 = SL2-78			2	CH = SH-122			16	CL1 = SL1-78			16	CH = SH-106			2	CL2 = SL2-78			2	CH = SH-106		
			77BF-102-18									1FL																																					
			77BF-103-18				1FL + 4FH					-																																					
	7B & 7C	77BF-111-18	77BF-101-18				2FL + 4FH					1FL																																					
			77BF-102-18				1FL + 4FH					-																																					
			77BF-103-18				2FL + 6FH					1FL																																					
	7A*	77BF-111-18 + 77BF-401-18	77BF-101-18				1FL + 6FH					-																																					
			77BF-102-18									1FL																																					
			77BF-103-18				2FL + 6FH					-																																					
	7B & 7C	77BF-111-18 + 77BF-401-18	77BF-101-18				1FL + 6FH					1FL																																					
			77BF-102-18																																													
			77BF-103-18																																													
6 + 3	7A	77BF-111-18	77BF-101-18	1FL + 16FH	1FL + 16FH	FL	2FL + 4FH	-	16 (CL1+CH1) + 2 (CL2 +CH2)	16 (CL1+CH1) + 2 (CL2 +CH2)	16 (CL1+CH1) + 2 (CL2 +CH2)	-	2 FL	8	GL1 = SL1-98	GH = SH-98		1	GL2 = SL2-98	GH = SH-98		8	GL1 = SL1-88	GH = SH-88		1	GL2 = SL2-88	GH = SH-88		16	CL1 = SL1-78			16	CH = SH-122			2	CL2 = SL2-78			2	CH = SH-122			16	CL1 = SL1-78			16	CH = SH-106			2	CL2 = SL2-78			2	CH = SH-106		
			77BF-102-18									1FL																																					
			77BF-103-18				1FL + 4FH					-																																					
	7B & 7C	77BF-111-18	77BF-101-18				2FL + 4FH					1FL																																					
			77BF-102-18				1FL + 4FH					-																																					
			77BF-103-18				2FL + 6FH					1FL																																					
	7A*	77BF-111-18 + 77BF-401-18	77BF-101-18				1FL + 6FH					-																																					
			77BF-102-18									1FL																																					
			77BF-103-18				2FL + 6FH					-																																					
	7B & 7C	77BF-111-18 + 77BF-401-18	77BF-101-18				1FL + 6FH					1FL																																					
			77BF-102-18																																													
			77BF-103-18																																													
7 + 2	7A	77BF-111-18	77BF-101-18	1FL + 16FH	1FL + 16FH	FL	2FL + 4FH	-	16 (CL1+CH1) + 2 (CL2 +CH2)	16 (CL1+CH1) + 2 (CL2 +CH2)	16 (CL1+CH1) + 2 (CL2 +CH2)	-	2 FL	8	GL1 = SL1-98	GH = SH-98		1	GL2 = SL2-98	GH = SH-98		8	GL1 = SL1-88	GH = SH-88		1	GL2 = SL2-88	GH = SH-88		16	CL1 = SL1-78			16	CH = SH-122			2	CL2 = SL2-78			2	CH = SH-122			16	CL1 = SL1-78			16	CH = SH-106			2	CL2 = SL2-78			2	CH = SH-106		
			77BF-102-18									1FL																																					
			77BF-103-18				1FL + 4FH					-																																					
	7B & 7C	77BF-111-18	77BF-101-18				2FL + 4FH					1FL																																					
			77BF-102-18				1FL + 4FH					-																																					
			77BF-103-18				2FL + 6FH					1FL																																					
	7A*	77BF-111-18 + 77BF-401-18	77BF-101-18				1FL + 6FH					-																																					
			77BF-102-18									1FL																																					
			77BF-103-18				2FL + 6FH					-																																					
	7B & 7C	77BF-111-18 + 77BF-401-18	77BF-101-18				1FL + 6FH					1FL																																					
			77BF-102-18																																													
			77BF-103-18																																													

CUTTING SIZE LIST / KESİM ÖLÇÜ LİSTESİ

90° CUTTING SIZE
KESİM ÖLÇÜLERİ

OPENING TYPE AÇILIM TİPİ	SECTION TYPE DETAY TİPİ	VERTICAL PROFILE DÜŞEY PROFİL	BOTTOM DETAIL TYPE ALT DETAY TİPİ	HORIZONTAL FRAME YATAY KASA 77BF-101-18 QUANTITY ANGULAR / MİKTAR / AÇI	HORIZONTAL FRAME YATAY KASA 77BF-101-18 FORMULA / FORMÜL	HORIZONTAL FRAME YATAY KASA 77BF-102-18 QUANTITY ANGULAR / MİKTAR / AÇI	HORIZONTAL FRAME YATAY KASA 77BF-102-18 FORMULA / FORMÜL	HORIZONTAL FRAME YATAY KASA 77BF-103-18 QUANTITY ANGULAR / MİKTAR / AÇI	HORIZONTAL FRAME YATAY KASA 77BF-103-18 FORMULA / FORMÜL	VERTICAL FRAME DÜŞEY KASA 77BF-111-18 QUANTITY ANGULAR / MİKTAR / AÇI	VERTICAL FRAME DÜŞEY KASA 77BF-111-18 FORMULA / FORMÜL	ADJUSTING ADAPTER AYAR ADAPTÖRÜ 77BF-401-18 QUANTITY ANGULAR / MİKTAR / AÇI	ADJUSTING ADAPTER AYAR ADAPTÖRÜ 77BF-401-18 FORMULA / FORMÜL	HORIZONTAL SASH 1 YATAY KANAT 1 77BF-201-18 QUANTITY ANGULAR / MİKTAR / AÇI	HORIZONTAL SASH 1 YATAY KANAT 1 77BF-201-18 FORMULA / FORMÜL	HORIZONTAL SASH 2 YATAY KANAT 2 77BF-201-18 QUANTITY ANGULAR / MİKTAR / AÇI	HORIZONTAL SASH 2 YATAY KANAT 2 77BF-201-18 FORMULA / FORMÜL	VERTICAL SASH DÜŞEY KANAT 77BF-201-18 QUANTITY ANGULAR / MİKTAR / AÇI	VERTICAL SASH DÜŞEY KANAT 77BF-201-18 FORMULA / FORMÜL	FRAME ADAPTER KASA ADAPTÖRÜ 77BF-402-00 QUANTITY ANGULAR / MİKTAR / AÇI	FRAME ADAPTER KASA ADAPTÖRÜ 77BF-402-00 FORMULA / FORMÜL	HORIZONTAL SASH ADAPTER 1 YATAY KANAT ADAPTÖRÜ 1 77BF-501-00 / H1 QUANTITY ANGULAR / MİKTAR / AÇI	HORIZONTAL SASH ADAPTER 1 YATAY KANAT ADAPTÖRÜ 1 77BF-501-00 / H1 FORMULA / FORMÜL	HORIZONTAL SASH ADAPTER 2 YATAY KANAT ADAPTÖRÜ 2 77BF-501-00 H2 QUANTITY ANGULAR / MİKTAR / AÇI	HORIZONTAL SASH ADAPTER 2 YATAY KANAT ADAPTÖRÜ 2 77BF-501-00 H2 FORMULA / FORMÜL	HORIZONTAL SASH ADAPTER 3 YATAY KANAT ADAPTÖRÜ 3 77BF-501-00 / H3 QUANTITY ANGULAR / MİKTAR / AÇI	HORIZONTAL SASH ADAPTER 3 YATAY KANAT ADAPTÖRÜ 3 77BF-501-00 / H3 FORMULA / FORMÜL	VERTICAL SASH ADAPTER 1 DÜŞEY KANAT ADAPTÖRÜ 1 77BF-501-00 / V1 QUANTITY ANGULAR / MİKTAR / AÇI	VERTICAL SASH ADAPTER 1 DÜŞEY KANAT ADAPTÖRÜ 1 77BF-501-00 / V1 FORMULA / FORMÜL	VERTICAL SASH ADAPTER 2 DÜŞEY KANAT ADAPTÖRÜ 2 77BF-501-00 / V2 QUANTITY ANGULAR / MİKTAR / AÇI	VERTICAL SASH ADAPTER 2 DÜŞEY KANAT ADAPTÖRÜ 2 77BF-501-00 / V2 FORMULA / FORMÜL	ADAPTER 1 ADAPTÖR 1 77BF-502-00 / 1 QUANTITY ANGULAR / MİKTAR / AÇI	ADAPTER 1 ADAPTÖR 1 77BF-502-00 / 1 FORMULA / FORMÜL	ADAPTER 2 ADAPTÖR 2 77BF-502-00 / 2 QUANTITY ANGULAR / MİKTAR / AÇI	ADAPTER 2 ADAPTÖR 2 77BF-502-00 / 2 FORMULA / FORMÜL	ADAPTER 1 ADAPTÖR 1 77BF-503-00 / 1 QUANTITY ANGULAR / MİKTAR / AÇI	ADAPTER 1 ADAPTÖR 1 77BF-503-00 / 1 FORMULA / FORMÜL	ADAPTER 2 ADAPTÖR 2 77BF-503-00 / 2 QUANTITY ANGULAR / MİKTAR / AÇI	ADAPTER 2 ADAPTÖR 2 77BF-503-00 / 2 FORMULA / FORMÜL
6 + 2	8A	77BF-111-18	77BF-101-18	2 90° / 1 90°	FL-44	1 90°	FL-44	1 90°	FL-44	2 90°	FH			12 45°	SL1 = ((FL-180)/8)-11,5	4 45°	SL2=SL1+51	16 45°	SH = FH-92	1 90° / 2 90°	FL-44	12 90°	SL1-12	4 90°/45°	SL2+8	-	-	2 90° / 45°	SH+14	2 90° / 45°	SH+7	1 90°	SH+6	1 90°	SH-14	-	-	-	-
			77BF-102-18	1 90° / 1 90°															SH = FH-92															SH-10				
			77BF-103-18																SH = FH-77															SH-14				
		77BF-111-18 + 77BF-401-18	77BF-101-18	2 90° / 1 90°	FL-44	1 90°	FL-44	1 90°	FL-44			2 90°	FH-54		SL1 = ((FL-232)/8)-11,5				SH = FH-92	1 90° / 2 90°	FL-96													SH-10				
			77BF-102-18	1 90° / 1 90°		1 90°	FL-44						FH-27						SH = FH-92															SH-14				
			77BF-103-18					1 90°	FL-44				FH-39						SH = FH-77															SH-10				
7 + 1	6A	77BF-111-18	77BF-101-18	2 90° / 1 90°	FL-44	1 90°	FL-44	1 90°	FL-44	2 90°	FH			16 45°	SL1 = (FL-152)/8	-	-	16 45°	SH = FH-92	1 90° / 2 90°	FL-44	16 90°	SL1-12	-	-	-	-	-	-	-	-	-	-	-	SH-14	-	-	-	-
			77BF-102-18	1 90° / 1 90°															SH = FH-92															SH-10				
			77BF-103-18																SH = FH-77															SH-14				
	6B & 6C	77BF-111-18	77BF-101-18	2 90° / 1 90°	FL-44	1 90°	FL-44	1 90°	FL-44						SL1 = (FL-180)/8				SH = FH-92	1 90° / 2 90°	FL-44	12 90°	SL1-12			4 90° / 45°	SL1+8	2 90° / 45°	SH+14	2 90° / 45°	SH+7				SH-10	2 90°	SH+1		
			77BF-102-18	1 90° / 1 90°															SH = FH-92															SH-14				
			77BF-103-18					1 90°	FL-44										SH = FH-77															SH-10				
	6A*	77BF-111-18 + 77BF-401-18	77BF-101-18	2 90° / 1 90°	FL-44	1 90°	FL-44					2 90°	FH-54						SH = FH-92	1 90° / 2 90°	FL-96	16 90°	SL1-12			-	-	-	-	-	-				SH-14				
			77BF-102-18	1 90° / 1 90°				1 90°	FL-44				FH-27						SH = FH-92															SH-10				
			77BF-103-18										FH-39						SH = FH-77															SH-14				
	6B & 6C	77BF-111-18 + 77BF-401-18	77BF-101-18	2 90° / 1 90°	FL-44	1 90°	FL-44	1 90°	FL-44			2 90°	FH-54						SH = FH-92	1 90° / 2 90°	FL-96	12 90°	SL1-12			4 90° / 45°	SL1+8	2 90° / 45°	SH+14	2 90° / 45°	SH+7				SH-10	2 90°	SH+1		
			77BF-102-18	1 90° / 1 90°									FH-27						SH = FH-92															SH-14				
			77BF-103-18					1 90°	FL-44				FH-39						SH = FH-77															SH-10				
5 + 4	7A	77BF-111-18	77BF-101-18	2 90° / 1 90°	FL-44	1 90°	FL-44	1 90°	FL-44	2 90°	FH			16 45°	SL1 = ((FL-178)/9)-5,1	2 45°	SL2=SL1+51	18 45°	SH = FH-92	1 90° / 2 90°	FL-44	16 90°	SL1-12	2 90°/45°	SL2+8	-	-	1 90° / 45°	SH+14	1 90° / 45°	SH+7	1 90°	SH+6	1 90°	SH-14	-	-	-	-
			77BF-102-18	1 90° / 1 90°															SH = FH-92															SH-10				
			77BF-103-18					1 90°	FL-44										SH = FH-77															SH-14				
	7B & 7C	77BF-111-18	77BF-101-18	2 90° / 1 90°	FL-44	1 90°	FL-44	1 90°	FL-44						SL1 = ((FL-192)/9)-5,1				SH = FH-92	1 90° / 2 90°	FL-44	14 90°	SL1-12			2 90° / 45°	SL1+8	2 90° / 45°	SH+14	2 90° / 45°	SH+7				SH-10	1 90°	SH+1	1 90°	SH-280
			77BF-102-18	1 90° / 1 90°															SH = FH-92															SH-14				
			77BF-103-18					1 90°	FL-44										SH = FH-77															SH-10				
	7A*	77BF-111-18 + 77BF-401-18	77BF-101-18	2 90° / 1 90°	FL-44	1 90°	FL-44					2 90°	FH-54						SH = FH-92	1 90° / 2 90°	FL-96	16 90°	SL1-12			-	-	1 90° / 45°	SH+14	1 90° / 45°	SH+7				SH-14				
			77BF-102-18	1 90° / 1 90°				1 90°	FL-44				FH-27						SH = FH-92															SH-10				
			77BF-103-18										FH-39						SH = FH-77															SH-14				
	7B & 7C	77BF-111-18 + 77BF-401-18	77BF-101-18	2 90° / 1 90°	FL-44	1 90°	FL-44	1 90°	FL-44			2 90°	FH-54						SH = FH-92	1 90° / 2 90°	FL-96	14 90°	SL1-12			2 90° / 45°	SL1+8	2 90° / 45°	SH+14	2 90° / 45°	SH+7				SH-10	1 90°	SH+1	1 90°	SH-280
			77BF-102-18	1 90° / 1 90°									FH-27						SH = FH-92															SH-14				
			77BF-103-18					1 90°	FL-44				FH-39						SH = FH-77															SH-10				
6 + 3	7A	77BF-111-18	77BF-101-18	2 90° / 1 90°	FL-44	1 90°	FL-44	1 90°	FL-44	2 90°	FH			16 45°	SL1 = ((FL-178)/9)-5,1	2 45°	SL2=SL1+51	18 45°	SH = FH-92	1 90° / 2 90°	FL-44	16 90°	SL1-12	2 90°/45°	SL2+8	-	-	1 90° / 45°	SH+14	1 90° / 45°	SH+7	1 90°	SH+6	1 90°	SH-14	-	-	-	-
			77BF-102-18	1 90° / 1 90°															SH = FH-92															SH-10				
			77BF-103-18					1 90°	FL-44										SH = FH-77															SH-14				
	7B & 7C	77BF-111-18	77BF-101-18	2 90° / 1 90°	FL-44	1 90°	FL-44	1 90°	FL-44						SL1 = ((FL-192)/9)-5,1				SH = FH-92	1 90° / 2 90°	FL-44	14 90°	SL1-12			2 90° / 45°	SL1+8	2 90° / 45°	SH+14	2 90° / 45°	SH+7				SH-10	1 90°	SH+1	1 90°	SH-280
			77BF-102-18	1 90° / 1 90°															SH = FH-92															SH-14				
			77BF-103-18					1 90°	FL-44										SH = FH-77															SH-10				
	7A*	77BF-111-18 + 77BF-401-18	77BF-101-18	2 90° / 1 90°	FL-44	1 90°	FL-44					2 90°	FH-54						SH = FH-92	1 90° / 2 90°	FL-96	16 90°	SL1-12			-	-	1 90° / 45°	SH+14	1 90° / 45°	SH+7				SH-14				
			77BF-102-18	1 90° / 1 90°				1 90°	FL-44				FH-27						SH = FH-92															SH-10				
			77BF-103-18										FH-39						SH = FH-77															SH-14				
	7B & 7C	77BF-111-18 + 77BF-401-18	77BF-101-18	2 90° / 1 90°	FL-44	1 90°	FL-44	1 90°	FL-44			2 90°	FH-54						SH = FH-92	1 90° / 2 90°	FL-96	14 90°	SL1-12			2 90° / 45°	SL1+8	2 90° / 45°	SH+14	2 90° / 45°	SH+7				SH-10	1 90°	SH+1	1 90°	SH-280
			77BF-102-18	1 90° / 1 90°									FH-27						SH = FH-92															SH-14				
			77BF-103-18					1 90°	FL-44				FH-39						SH = FH-77															SH-10				
7 + 2	7A	77BF-111-18	77BF-101-18	2 90° / 1 90°	FL-44	1 90°	FL-44	1 90°	FL-44	2 90°	FH			16 45°	SL1 = ((FL-178)/9)-5,1	2 45°	SL2=SL1+51	18 45°	SH = FH-92	1 90° / 2 90°	FL-44	16 90°	SL1-12	2 90°/45°	SL2+8	-	-	1 90° / 45°	SH+14	1 90° / 45°	SH+7	1 90°	SH+6	1 90°	SH-14	-	-	-	-
			77BF-102-18	1 90° / 1 90°															SH = FH-92															SH-10				
			77BF-103-18					1 90°	FL-44										SH = FH-77															SH-14				
	7B & 7C	77BF-111-18	77BF-101-18	2 90° / 1 90°	FL-44	1 90°	FL-44	1 90°	FL-44						SL1 = ((FL-192)/9)-5,1				SH = FH-92	1 90° / 2 90°	FL-44	14 90°	SL1-12			2 90° / 45°	SL1+8	2 90° / 45°	SH+14	2 90° / 45°	SH+7				SH-10	1 90°	SH+1	1 90°	SH-280
			77BF-102-18	1 90° / 1 90°															SH = FH-92															SH-14				
			77BF-103-18					1 90°	FL-44										SH = FH-77															SH-10				
	7A*	77BF-111-18 + 77BF-401-18	77BF-101-18	2 90° / 1 90°	FL-44	1 90°	FL-44					2 90°	FH-54						SH = FH-92	1 90° / 2 90°	FL-96	16 90°	SL1-12			-	-	1 90° / 45°	SH+14	1 90° / 45°	SH+7				SH-14				
			77BF-102-18	1 90° / 1 90°				1 90°	FL-44				FH-27						SH = FH-92															SH-10				
			77BF-103-18										FH-39						SH = FH-77															SH-14				
	7B & 7C	77BF-111-18 + 77BF-401-18	77BF-101-18	2 90° / 1 90°	FL-44	1 90°	FL-44	1 90°	FL-44			2 90°	FH-54						SH = FH-92	1 90° / 2 90°	FL-96	14 90°	SL1-12			2 90° / 45°	SL1+8	2 90° / 45°	SH+14	2 90° / 45°	SH+7				SH-10	1 90°	SH+1	1 90°	SH-280
			77BF-102-18	1 90° / 1 90°									FH-27						SH = FH-92															SH-14				
			77BF-103-18					1 90°	FL-44				FH-39						SH = FH-77															SH-10				

CUTTING SIZE LIST / KESİM ÖLÇÜ LİSTESİ

90° CUTTING SIZE / KESİM ÖLÇÜLERİ				GASKETS / FİTİLLER										GLASS / CAM 77BF-201-18				GLASS / CAM 77BF-202-18				GLAZING BEAD / CAM ÇİTASI 77BF-201-18								GLAZING BEAD / CAM ÇİTASI 77BF-202-18							
														GL1				GL2				GL1				GL2				CL1				CH			
OPENING TYPE / AÇILIM TİPİ	SECTION TYPE / DETAY TİPİ	VERTICAL PROFILE / DÜŞEY PROFİL	BOTTOM DETAIL TYPE / ALT DETAY TİPİ	EM77BF-01	EM77BF-02	EM77BF-03	EM3-03	EM3-01	EM2-03	EM1-XX	O.RING-3 mm	AC77BF-421	EM45-05	QUANTITY / MİKTAR	FORMULA / FORMÜL Horizontal / Yatay	FORMULA / FORMÜL Vertical / Düşey	QUANTITY / MİKTAR	FORMULA / FORMÜL Horizontal / Yatay	FORMULA / FORMÜL Vertical / Düşey	QUANTITY / MİKTAR	FORMULA / FORMÜL Horizontal / Yatay	FORMULA / FORMÜL Vertical / Düşey	QUANTITY / MİKTAR	FORMULA / FORMÜL Horizontal / Yatay	FORMULA / FORMÜL Vertical / Düşey	QUANTITY / MİKTAR	FORMULA / FORMÜL Horizontal / Yatay	FORMULA / FORMÜL Vertical / Düşey	QUANTITY / MİKTAR	FORMULA / FORMÜL Horizontal / Yatay	FORMULA / FORMÜL Vertical / Düşey	QUANTITY / MİKTAR	FORMULA / FORMÜL Horizontal / Yatay	FORMULA / FORMÜL Vertical / Düşey	QUANTITY / MİKTAR	FORMULA / FORMÜL Horizontal / Yatay	FORMULA / FORMÜL Vertical / Düşey
5 + 5	6A	77BF-111-18	77BF-101-18	1FL + 18FH	1FL + 18FH	FL	2FL + 4FH	-	20 (CL1+CH1)	20 (CL1+CH1)	20 (CL1+CH1)	-	2 FL	10	GL1 = SL1-98	GH = SH-98	-	-	-	10	GL1 = SL1-88	GH = SH-88	-	-	-	20	CL1 = SL1-78		20	CH = SH-122		-	-		-	-	
			77BF-102-18				1FL + 4FH					1FL																									
			77BF-103-18																																		
	6B & 6C	77BF-111-18	77BF-101-18				2FL + 4FH					-																									
			77BF-102-18				1FL + 4FH					1FL																									
			77BF-103-18																																		
	6A*	77BF-111-18 + 77BF-401-18	77BF-101-18				2FL + 6FH					-																									
			77BF-102-18				1FL + 6FH					1FL																									
			77BF-103-18																																		
	6B & 6C	77BF-111-18 + 77BF-401-18	77BF-101-18				2FL + 6FH					-																									
			77BF-102-18				1FL + 6FH					1FL																									
			77BF-103-18																																		
7 + 3	6A	77BF-111-18	77BF-101-18	1FL + 18FH	1FL + 18FH	FL	2FL + 4FH	-	20 (CL1+CH1)	20 (CL1+CH1)	20 (CL1+CH1)	-	2 FL	10	GL1 = SL1-98	GH = SH-98	-	-	-	10	GL1 = SL1-88	GH = SH-88	-	-	-	20	CL1 = SL1-78		20	CH = SH-122		-	-		-	-	
			77BF-102-18				1FL + 4FH					1FL																									
			77BF-103-18																																		
	6B & 6C	77BF-111-18	77BF-101-18				2FL + 4FH					-																									
			77BF-102-18				1FL + 4FH					1FL																									
			77BF-103-18																																		
	6A*	77BF-111-18 + 77BF-401-18	77BF-101-18				2FL + 6FH					-																									
			77BF-102-18				1FL + 6FH					1FL																									
			77BF-103-18																																		
	6B & 6C	77BF-111-18 + 77BF-401-18	77BF-101-18				2FL + 6FH					-																									
			77BF-102-18				1FL + 6FH					1FL																									
			77BF-103-18																																		
6 + 4	8A	77BF-111-18	77BF-101-18	1FL + 18FH	1FL + 18FH	FL	2FL + 3FH	FH	16 (CL1+CH1) + 4 (CL2 +CH2)	16 (CL1+CH1) + 4 (CL2 +CH2)	16 (CL1+CH1) + 4 (CL2 +CH2)	-	2 FL	8	GL1 = SL1-98	GH = SH-98	2	GL2 = SL2-98	GH = SH-98	8	GL1 = SL1-88	GH = SH-88	2	GL2 = SL2-88	GH = SH-88	16	CL1 = SL1-78		16	CH = SH-122		4	CL2 = SL2-78		4	CH = SH-122	
			77BF-102-18				1FL + 3FH					1FL																									
			77BF-103-18																																		
		77BF-111-18 + 77BF-401-18	77BF-101-18				2FL + 5FH					-																									
			77BF-102-18				1FL + 5FH					1FL																									
			77BF-103-18																																		
6 + 5	7A	77BF-111-18	77BF-101-18	1FL + 20FH	1FL + 20FH	FL	2FL + 4FH	-	20 (CL1+CH1) + 2 (CL2 +CH2)	20 (CL1+CH1) + 2 (CL2 +CH2)	20 (CL1+CH1) + 2 (CL2 +CH2)	-	2 FL	10	GL1 = SL1-98	GH = SH-98	1	GL2 = SL2-98	GH = SH-98	10	GL1 = SL1-88	GH = SH-88	1	GL2 = SL2-88	GH = SH-88	20	CL1 = SL1-78		20	CH = SH-122		2	CL2 = SL2-78		2	CH = SH-122	
			77BF-102-18				1FL + 4FH					1FL																									
			77BF-103-18																																		
	7B & 7C	77BF-111-18	77BF-101-18				2FL + 4FH					-																									
			77BF-102-18				1FL + 4FH					1FL																									
			77BF-103-18																																		
	7A*	77BF-111-18 + 77BF-401-18	77BF-101-18				2FL + 6FH					-																									
			77BF-102-18				1FL + 6FH					1FL																									
			77BF-103-18																																		
	7B & 7C	77BF-111-18 + 77BF-401-18	77BF-101-18				2FL + 6FH					-																									
			77BF-102-18				1FL + 6FH					1FL																									
			77BF-103-18																																		
7 + 4	7A	77BF-111-18	77BF-101-18	1FL + 20FH	1FL + 20FH	FL	2FL + 4FH	-	20 (CL1+CH1) + 2 (CL2 +CH2)	20 (CL1+CH1) + 2 (CL2 +CH2)	20 (CL1+CH1) + 2 (CL2 +CH2)	-	2 FL	10	GL1 = SL1-98	GH = SH-98	1	GL2 = SL2-98	GH = SH-98	10	GL1 = SL1-88	GH = SH-88	1	GL2 = SL2-88	GH = SH-88	20	CL1 = SL1-78		20	CH = SH-122		2	CL2 = SL2-78		2	CH = SH-122	
			77BF-102-18				1FL + 4FH					1FL																									
			77BF-103-18																																		
	7B & 7C	77BF-111-18	77BF-101-18				2FL + 4FH					-																									
			77BF-102-18				1FL + 4FH					1FL																									
			77BF-103-18																																		
	7A*	77BF-111-18 + 77BF-401-18	77BF-101-18				2FL + 6FH					-																									
			77BF-102-18				1FL + 6FH					1FL																									
			77BF-103-18																																		
	7B & 7C	77BF-111-18 + 77BF-401-18	77BF-101-18				2FL + 6FH					-																									
			77BF-102-18				1FL + 6FH					1FL																									
			77BF-103-18																																		

CUTTING SIZE LIST / KESİM ÖLÇÜ LİSTESİ

90° CUTTING SIZE / KESİM ÖLÇÜLERİ

OPENING TYPE / AÇILIM TİPİ	SECTION TYPE / DETAY TİPİ	VERTICAL PROFILE / DÜŞEY PROFİL	BOTTOM DETAIL TYPE / ALT DETAY TİPİ	HORIZONTAL FRAME YATAY KASA 77BF-101-18		HORIZONTAL FRAME YATAY KASA 77BF-102-18		HORIZONTAL FRAME YATAY KASA 77BF-103-18		VERTICAL FRAME DÜŞEY KASA 77BF-111-18		ADJUSTING ADAPTER AYAR ADAPTÖRÜ 77BF-401-18		HORIZONTAL SASH 1 YATAY KANAT 1 77BF-201-18		HORIZONTAL SASH 2 YATAY KANAT 2 77BF-201-18		VERTICAL SASH DÜŞEY KANAT 77BF-201-18		FRAME ADAPTER KASA ADAPTÖRÜ 77BF-402-00		HORIZONTAL SASH ADAPTER 1 YATAY KANAT ADAPTÖRÜ 1 77BF-501-00 / H1		HORIZONTAL SASH ADAPTER 2 YATAY KANAT ADAPTÖRÜ 2 77BF-501-00 H2		HORIZONTAL SASH ADAPTER 3 YATAY KANAT ADAPTÖRÜ 3 77BF-501-00 / H3		VERTICAL SASH ADAPTER 1 DÜŞEY KANAT ADAPTÖRÜ 1 77BF-501-00 / V1		VERTICAL SASH ADAPTER 2 DÜŞEY KANAT ADAPTÖRÜ 2 77BF-501-00 / V2		ADAPTER 1 ADAPTÖR 1 77BF-502-00 / 1		ADAPTER 2 ADAPTÖR 2 77BF-502-00 / 2		ADAPTER 1 ADAPTÖR 1 77BF-503-00 / 1		ADAPTER 2 ADAPTÖR 2 77BF-503-00 / 2	
				QUANTITY ANGULAR MİKTAR / AÇI	FORMULA / FORMÜL	QUANTITY ANGULAR MİKTAR / AÇI	FORMULA / FORMÜL	QUANTITY ANGULAR MİKTAR / AÇI	FORMULA / FORMÜL	QUANTITY ANGULAR MİKTAR / AÇI	FORMULA / FORMÜL	QUANTITY ANGULAR MİKTAR / AÇI	FORMULA / FORMÜL	QUANTITY ANGULAR MİKTAR / AÇI	FORMULA / FORMÜL	QUANTITY ANGULAR MİKTAR / AÇI	FORMULA / FORMÜL	QUANTITY ANGULAR MİKTAR / AÇI	FORMULA / FORMÜL	QUANTITY ANGULAR MİKTAR / AÇI	FORMULA / FORMÜL	QUANTITY ANGULAR MİKTAR / AÇI	FORMULA / FORMÜL	QUANTITY ANGULAR MİKTAR / AÇI	FORMULA / FORMÜL	QUANTITY ANGULAR MİKTAR / AÇI	FORMULA / FORMÜL	QUANTITY ANGULAR MİKTAR / AÇI	FORMULA / FORMÜL	QUANTITY ANGULAR MİKTAR / AÇI	FORMULA / FORMÜL	QUANTITY ANGULAR MİKTAR / AÇI	FORMULA / FORMÜL	QUANTITY ANGULAR MİKTAR / AÇI	FORMULA / FORMÜL	QUANTITY ANGULAR MİKTAR / AÇI	FORMULA / FORMÜL
5 + 5	6A	77BF-111-18	77BF-101-18	2 90°	FL-44	1 90°	FL-44	1 90°	FL-44	2 90°	FH			20 45°	SL1 = (FL-176)/10	-	-	20 45°	SH = FH-92	1 90°	FL-44	20 90°	SL1-12	-	-	-	-	-	-	-	-	-	-	1 90°	SH+6	1 90°	SH-14	-	-	-	-
			77BF-102-18	1 90°				1 90°											SH = FH-92	2 90°																SH-10				
			77BF-103-18	1 90°															SH = FH-77	2 90°																SH-14				
	6B & 6C	77BF-111-18	77BF-101-18	2 90°	FL-44										SL1 = (FL-204)/10				SH = FH-92	1 90°	FL-44	16 90°	SL1-12			4 90° / 45°	SL1+8	2 90° / 45°	SH+14	2 90° / 45°	SH+7				SH-10	2 90°	SH+1		
			77BF-102-18	1 90°		1 90°		1 90°											SH = FH-92	2 90°																SH-14				
			77BF-103-18	1 90°															SH = FH-77	2 90°																SH-10				
	6A*	77BF-111-18 + 77BF-401-18	77BF-101-18	2 90°	FL-44							2 90°	FH-54		SL1 = (FL-228)/10				SH = FH-92	1 90°	FL-96	20 90°	SL1-12			-	-	-	-	-	-				SH-14	-	-		
			77BF-102-18	1 90°		1 90°		1 90°					FH-27						SH = FH-92	2 90°																SH-10				
			77BF-103-18	1 90°									FH-39						SH = FH-77	2 90°																SH-14				
	6B & 6C	77BF-111-18 + 77BF-401-18	77BF-101-18	2 90°	FL-44							2 90°	FH-54		SL1 = (FL-256)/10				SH = FH-92	1 90°	FL-96	16 90°	SL1-12			4 90° / 45°	SL1+8	2 90° / 45°	SH+14	2 90° / 45°	SH+7				SH-10	2 90°	SH+1		
			77BF-102-18	1 90°		1 90°		1 90°					FH-27						SH = FH-92	2 90°																SH-14				
			77BF-103-18	1 90°				1 90°					FH-39						SH = FH-77	2 90°																SH-10				
7 + 3	6A	77BF-111-18	77BF-101-18	2 90°	FL-44	1 90°	FL-44	1 90°	FL-44	2 90°	FH			20 45°	SL1 = (FL-176)/10	-	-	20 45°	SH = FH-92	1 90°	FL-44	20 90°	SL1-12	-	-	-	-	-	-	-	-	-	-	1 90°	SH+6	1 90°	SH-14	-	-	-	-
			77BF-102-18	1 90°				1 90°											SH = FH-92	2 90°																SH-10				
			77BF-103-18	1 90°															SH = FH-77	2 90°																SH-14				
	6B & 6C	77BF-111-18	77BF-101-18	2 90°	FL-44										SL1 = (FL-204)/10				SH = FH-92	1 90°	FL-44	16 90°	SL1-12			4 90° / 45°	SL1+8	2 90° / 45°	SH+14	2 90° / 45°	SH+7				SH-10	2 90°	SH+1		
			77BF-102-18	1 90°		1 90°		1 90°											SH = FH-92	2 90°																SH-14				
			77BF-103-18	1 90°															SH = FH-77	2 90°																SH-10				
	6A*	77BF-111-18 + 77BF-401-18	77BF-101-18	2 90°	FL-44							2 90°	FH-54		SL1 = (FL-228)/10				SH = FH-92	1 90°	FL-96	20 90°	SL1-12			-	-	-	-	-	-				SH-14	-	-		
			77BF-102-18	1 90°		1 90°		1 90°					FH-27						SH = FH-92	2 90°																SH-10				
			77BF-103-18	1 90°									FH-39						SH = FH-77	2 90°																SH-14				
	6B & 6C	77BF-111-18 + 77BF-401-18	77BF-101-18	2 90°	FL-44							2 90°	FH-54		SL1 = (FL-256)/10				SH = FH-92	1 90°	FL-96	16 90°	SL1-12			4 90° / 45°	SL1+8	2 90° / 45°	SH+14	2 90° / 45°	SH+7				SH-10	2 90°	SH+1		
			77BF-102-18	1 90°		1 90°		1 90°					FH-27						SH = FH-92	2 90°																SH-14				
			77BF-103-18	1 90°				1 90°					FH-39						SH = FH-77	2 90°																SH-10				
6 + 4	8A	77BF-111-18	77BF-101-18	2 90°	FL-44	1 90°	FL-44	1 90°	FL-44	2 90°	FH			16 45°	SL1 = ((FL-204)/10)-9,2	4 45°	SL2=SL1+51	20 45°	SH = FH-92	1 90°	FL-44	16 90°	SL1-12	4 90°/45°	SL2+8	-	-	2 90° / 45°	SH+14	2 90° / 45°	SH+7	1 90°	SH+6	1 90°	SH-14	-	-	-	-
			77BF-102-18	1 90°				1 90°											SH = FH-92	2 90°																SH-10				
			77BF-103-18	1 90°															SH = FH-77	2 90°																SH-14				
		77BF-111-18 + 77BF-401-18	77BF-101-18	2 90°	FL-44							2 90°	FH-54		SL1 = ((FL-256)/10)-9,2				SH = FH-92	1 90°	FL-96														SH-10				
			77BF-102-18	1 90°		1 90°		1 90°					FH-27						SH = FH-92	2 90°																SH-14				
			77BF-103-18	1 90°									FH-39						SH = FH-77	2 90°																SH-10				
6 + 5	7A	77BF-111-18	77BF-101-18	2 90°	FL-44	1 90°	FL-44	1 90°	FL-44	2 90°	FH			20 45°	SL1 = ((FL-202)/11)-4,1	2 45°	SL2=SL1+51	22 45°	SH = FH-92	1 90°	FL-44	20 90°	SL1-12	2 90°/45°	SL2+8	-	-	1 90° / 45°	SH+14	1 90° / 45°	SH+7	1 90°	SH+6	1 90°	SH-14	-	-	-	-
			77BF-102-18	1 90°				1 90°											SH = FH-92	2 90°																SH-10				
			77BF-103-18	1 90°															SH = FH-77	2 90°																SH-14				
	7B & 7C	77BF-111-18	77BF-101-18	2 90°	FL-44										SL1 = ((FL-216)/11)-4,1				SH = FH-92	1 90°	FL-44	18 90°	SL1-12			2 90° / 45°	SL1+8	2 90° / 45°	SH+14	2 90° / 45°	SH+7				SH-10	1 90°	SH+1	1 90°	SH-280
			77BF-102-18	1 90°		1 90°		1 90°											SH = FH-92	2 90°																SH-14					
			77BF-103-18	1 90°															SH = FH-77	2 90°																SH-10					
	7A*	77BF-111-18 + 77BF-401-18	77BF-101-18	2 90°	FL-44							2 90°	FH-54		SL1 = ((FL-254)/11)-4,1				SH = FH-92	1 90°	FL-96	20 90°	SL1-12			-	-	1 90° / 45°	SH+14	1 90° / 45°	SH+7				SH-14	-	-	-	-
			77BF-102-18	1 90°		1 90°		1 90°					FH-27						SH = FH-92	2 90°																SH-10					
			77BF-103-18	1 90°									FH-39						SH = FH-77	2 90°																SH-14					
	7B & 7C	77BF-111-18 + 77BF-401-18	77BF-101-18	2 90°	FL-44							2 90°	FH-54		SL1 = ((FL-268)/11)-4,1				SH = FH-92	1 90°	FL-96	18 90°	SL1-12			2 90° / 45°	SL1+8	2 90° / 45°	SH+14	2 90° / 45°	SH+7				SH-10	1 90°	SH+1	1 90°	SH-280
			77BF-102-18	1 90°		1 90°		1 90°					FH-27						SH = FH-92	2 90°																SH-14					
			77BF-103-18	1 90°									FH-39						SH = FH-77	2 90°																SH-10					
7 + 4	7A	77BF-111-18	77BF-101-18	2 90°	FL-44	1 90°	FL-44	1 90°	FL-44	2 90°	FH			20 45°	SL1 = ((FL-202)/11)-4,1	2 45°	SL2=SL1+51	22 45°	SH = FH-92	1 90°	FL-44	20 90°	SL1-12	2 90°/45°	SL2+8	-	-	1 90° / 45°	SH+14	1 90° / 45°	SH+7	1 90°	SH+6	1 90°	SH-14	-	-	-	-
			77BF-102-18	1 90°				1 90°											SH = FH-92	2 90°																SH-10					
			77BF-103-18	1 90°															SH = FH-77	2 90°																SH-14					
	7B & 7C	77BF-111-18	77BF-101-18	2 90°	FL-44										SL1 = ((FL-216)/11)-4,1				SH = FH-92	1 90°	FL-44	18 90°	SL1-12			2 90° / 45°	SL1+8	2 90° / 45°	SH+14	2 90° / 45°	SH+7				SH-10	1 90°	SH+1	1 90°	SH-280
			77BF-102-18	1 90°		1 90°		1 90°											SH = FH-92	2 90°																SH-14					
			77BF-103-18	1 90°															SH = FH-77	2 90°																SH-10					
	7A*	77BF-111-18 + 77BF-401-18	77BF-101-18	2 90°	FL-44							2 90°	FH-54		SL1 = ((FL-254)/11)-4,1				SH = FH-92	1 90°	FL-96	20 90°	SL1-12			-	-	1 90° / 45°	SH+14	1 90° / 45°	SH+7				SH-14	-	-	-	-
			77BF-102-18	1 90°		1 90°		1 90°					FH-27						SH = FH-92	2 90°																SH-10					
			77BF-103-18	1 90°									FH-39						SH = FH-77	2 90°																SH-14					
	7B & 7C	77BF-111-18 + 77BF-401-18	77BF-101-18	2 90°	FL-44							2 90°	FH-54		SL1 = ((FL-268)/11)-4,1				SH = FH-92	1 90°	FL-96	18 90°	SL1-12			2 90° / 45°	SL1+8	2 90° / 45°	SH+14	2 90° / 45°	SH+7				SH-10	1 90°	SH+1	1 90°	SH-280
			77BF-102-18	1 90°		1 90°		1 90°					FH-27						SH = FH-92	2 90°																SH-14					
			77BF-103-18	1 90°									FH-39						SH = FH-77	2 90°																SH-10					

CUTTING SIZE LIST / KESİM ÖLÇÜ LİSTESİ

90° CUTTING SIZE / KESİM ÖLÇÜLERİ				GASKETS / FİTİLLER										GLASS / CAM 77BF-201-18				GLASS / CAM 77BF-202-18				GLAZING BEAD / CAM ÇİTASI 77BF-201-18								GLAZING BEAD / CAM ÇİTASI 77BF-202-18							
														GL1				GL2				GL1				GL2				CL1		CH		CL2		CH	
OPENING TYPE / AÇILIM TİPİ	SECTION TYPE / DETAY TİPİ	VERTICAL PROFILE / DÜŞEY PROFİL	BOTTOM DETAIL TYPE / ALT DETAY TİPİ	EM77BF-01	EM77BF-02	EM77BF-03	EM3-03	EM3-01	EM2-03	EM1-XX	O.RING-3 mm	AC77BF-421	EM45-05	QUANTITY / MİKTAR	FORMULA / FORMÜL Horizontal / Yatay	FORMULA / FORMÜL Vertical / Düşey	QUANTITY / MİKTAR	FORMULA / FORMÜL Horizontal / Yatay	FORMULA / FORMÜL Vertical / Düşey	QUANTITY / MİKTAR	FORMULA / FORMÜL Horizontal / Yatay	FORMULA / FORMÜL Vertical / Düşey	QUANTITY / MİKTAR	FORMULA / FORMÜL Horizontal / Yatay	FORMULA / FORMÜL Vertical / Düşey	QUANTITY / MİKTAR	FORMULA / FORMÜL Horizontal / Yatay	QUANTITY / MİKTAR	FORMULA / FORMÜL Vertical / Düşey	QUANTITY / MİKTAR	FORMULA / FORMÜL Horizontal / Yatay	QUANTITY / MİKTAR	FORMULA / FORMÜL Vertical / Düşey	QUANTITY / MİKTAR	FORMULA / FORMÜL Horizontal / Yatay	QUANTITY / MİKTAR	FORMULA / FORMÜL Vertical / Düşey
6 + 6	8A	77BF-111-18	77BF-101-18	1FL + 22FH	1FL + 22FH	FL	2FL + 3FH	FH	20 (CL1+CH1) + 4 (CL2 +CH2)	20 (CL1+CH1) + 4 (CL2 +CH2)	20 (CL1+CH1) + 4 (CL2 +CH2)	-	2 FL	10	GL1 = SL1-98	GH = SH-98	2	GL2 = SL2-98	GH = SH-98	10	GL1 = SL1-88	GH = SH-88	2	GL2 = SL2-88	GH = SH-88	20	CL1 = SL1-78	20	CH = SH-122	4	CL2 = SL2-78	4	CH = SH-122	20	CL1 = SL1-78	20	CH = SH-106	4	CL2 = SL2-78	4	CH = SH-106
			77BF-102-18				1FL + 3FH					1FL																									
			77BF-103-18																																		
		77BF-111-18 + 77BF-401-18	77BF-101-18				2FL + 5FH					-																									
			77BF-102-18									1FL																									
			77BF-103-18				1FL + 5FH																															
7 + 5	6A	77BF-111-18	77BF-101-18	1FL + 22FH	1FL + 22FH	FL	2FL + 4FH	-	24 (CL1+CH1)	24 (CL1+CH1)	24 (CL1+CH1)	-	2 FL	12	GL1 = SL1-98	GH = SH-98	-	-	-	12	GL1 = SL1-88	GH = SH-88	-	-	-	24	CL1 = SL1-78	24	CH = SH-122	-	-	-	-	24	CL1 = SL1-78	24	CH = SH-106	-	-	-	-
			77BF-102-18				1FL + 4FH					1FL																										
	6B & 6C	77BF-111-18	77BF-101-18				2FL + 4FH					-																									
			77BF-102-18				1FL + 4FH					1FL																										
			77BF-103-18				2FL + 6FH					-																										
	6A*	77BF-111-18 + 77BF-401-18	77BF-101-18				1FL + 6FH					1FL																										
			77BF-102-18				2FL + 6FH					-																										
			77BF-103-18				1FL + 6FH					1FL																										
	6B & 6C	77BF-111-18 + 77BF-401-18	77BF-101-18																																		
			77BF-102-18																																		
			77BF-103-18																																		
7 + 6	7A	77BF-111-18	77BF-101-18	1FL + 24FH	1FL + 24FH	FL	2FL + 4FH	-	24 (CL1+CH1) + 2 (CL2 +CH2)	24 (CL1+CH1) + 2 (CL2 +CH2)	24 (CL1+CH1) + 2 (CL2 +CH2)	-	2 FL	12	GL1 = SL1-98	GH = SH-98	1	GL2 = SL2-98	GH = SH-98	12	GL1 = SL1-88	GH = SH-88	1	GL2 = SL2-88	GH = SH-88	24	CL1 = SL1-78	24	CH = SH-122	2	CL2 = SL2-78	2	CH = SH-122	24	CL1 = SL1-78	24	CH = SH-106	2	CL2 = SL2-78	2	CH = SH-106
			77BF-102-18				1FL + 4FH					1FL																										
	7B & 7C	77BF-111-18	77BF-101-18				2FL + 4FH					-																										
			77BF-102-18				1FL + 4FH					1FL																										
			77BF-103-18				2FL + 6FH					-																										
	7A*	77BF-111-18 + 77BF-401-18	77BF-101-18				1FL + 6FH					1FL																										
			77BF-102-18				2FL + 6FH					-																										
			77BF-103-18				1FL + 6FH					1FL																										
	7B & 7C	77BF-111-18 + 77BF-401-18	77BF-101-18																																		
			77BF-102-18																																		
			77BF-103-18																																		
7 + 7	6A	77BF-111-18	77BF-101-18	1FL + 26FH	1FL + 26FH	FL	2FL + 4FH	-	28 (CL1+CH1)	28 (CL1+CH1)	28 (CL1+CH1)	-	2 FL	14	GL1 = SL1-98	GH = SH-98	-	-	-	14	GL1 = SL1-88	GH = SH-88	-	-	-	28	CL1 = SL1-78	28	CH = SH-122	-	-	-	-	28	CL1 = SL1-78	28	CH = SH-106	-	-	-	-
			77BF-102-18				1FL + 4FH					1FL																										
	6B & 6C	77BF-111-18	77BF-101-18				2FL + 4FH					-																										
			77BF-102-18				1FL + 4FH					1FL																										
			77BF-103-18				2FL + 6FH					-																										
	6A*	77BF-111-18 + 77BF-401-18	77BF-101-18				1FL + 6FH					1FL																										
			77BF-102-18				2FL + 6FH					-																										
			77BF-103-18				1FL + 6FH					1FL																										
	6B & 6C	77BF-111-18 + 77BF-401-18	77BF-101-18																																		
			77BF-102-18																																		
			77BF-103-18																																		

CUTTING SIZE LIST / KESİM ÖLÇÜ LİSTESİ

90° CUTTING SIZE
KESİM ÖLÇÜLERİ

OPENING TYPE AÇILIM TİPİ	SECTION TYPE DETAY TİPİ	VERTICAL PROFILE DÜŞEY PROFİL	BOTTOM DETAIL TYPE ALT DETAY TİPİ	HORIZONTAL FRAME YATAY KASA 77BF-101-18		HORIZONTAL FRAME YATAY KASA 77BF-102-18		HORIZONTAL FRAME YATAY KASA 77BF-103-18		VERTICAL FRAME DÜŞEY KASA 77BF-111-18		ADJUSTING ADAPTER AYAR ADAPTÖRÜ 77BF-401-18		HORIZONTAL SASH 1 YATAY KANAT 1 77BF-201-18		HORIZONTAL SASH 2 YATAY KANAT 2 77BF-201-18		VERTICAL SASH DÜŞEY KANAT 77BF-201-18		FRAME ADAPTER KASA ADAPTÖRÜ 77BF-402-00		HORIZONTAL SASH ADAPTER 1 YATAY KANAT ADAPTÖRÜ 1 77BF-501-00 / H1		HORIZONTAL SASH ADAPTER 2 YATAY KANAT ADAPTÖRÜ 2 77BF-501-00 H2		HORIZONTAL SASH ADAPTER 3 YATAY KANAT ADAPTÖRÜ 3 77BF-501-00 / H3		VERTICAL SASH ADAPTER 1 DÜŞEY KANAT ADAPTÖRÜ 1 77BF-501-00 / V1		VERTICAL SASH ADAPTER 2 DÜŞEY KANAT ADAPTÖRÜ 2 77BF-501-00 / V2		ADAPTER 1 ADAPTÖR 1 77BF-502-00 / 1		ADAPTER 2 ADAPTÖR 2 77BF-502-00 / 2		ADAPTER 1 ADAPTÖR 1 77BF-503-00 / 1		ADAPTER 2 ADAPTÖR 2 77BF-503-00 / 2	
				QUANTITY ANGULAR MİKTAR / AÇI	FORMULA / FORMÜL	QUANTITY ANGULAR MİKTAR / AÇI	FORMULA / FORMÜL	QUANTITY ANGULAR MİKTAR / AÇI	FORMULA / FORMÜL	QUANTITY ANGULAR MİKTAR / AÇI	FORMULA / FORMÜL	QUANTITY ANGULAR MİKTAR / AÇI	FORMULA / FORMÜL	QUANTITY ANGULAR MİKTAR / AÇI	FORMULA / FORMÜL	QUANTITY ANGULAR MİKTAR / AÇI	FORMULA / FORMÜL	QUANTITY ANGULAR MİKTAR / AÇI	FORMULA / FORMÜL	QUANTITY ANGULAR MİKTAR / AÇI	FORMULA / FORMÜL	QUANTITY ANGULAR MİKTAR / AÇI	FORMULA / FORMÜL	QUANTITY ANGULAR MİKTAR / AÇI	FORMULA / FORMÜL	QUANTITY ANGULAR MİKTAR / AÇI	FORMULA / FORMÜL	QUANTITY ANGULAR MİKTAR / AÇI	FORMULA / FORMÜL	QUANTITY ANGULAR MİKTAR / AÇI	FORMULA / FORMÜL	QUANTITY ANGULAR MİKTAR / AÇI	FORMULA / FORMÜL	QUANTITY ANGULAR MİKTAR / AÇI	FORMULA / FORMÜL	QUANTITY ANGULAR MİKTAR / AÇI	FORMULA / FORMÜL
6 + 6	8A	77BF-111-18	77BF-101-18	2 90° / 1 90°	FL-44	1 90°	FL-44		FL-44	2 90°	FH			20 45°	SL1 = ((FL-228)/12)-7,6	4 45°	SL2=SL1+51	24 45°	SH = FH-92	1 90° / 2 90°	FL-44	20 90°	SL1-12	4 90°/45°	SL2+8	-	-	2 90° / 45°	SH+14	2 90° / 45°	SH+7	1 90°	SH+6	1 90°	SH-14	-	-	-	-
			77BF-102-18																SH = FH-92																SH-10				
			77BF-103-18																SH = FH-77																SH-14				
		77BF-111-18 + 77BF-401-18	77BF-101-18									2 90°	FH-54						SH = FH-92																SH-10				
			77BF-102-18										FH-27						SH = FH-92																				
			77BF-103-18										FH-39						SH = FH-77																				
7 + 5	6A	77BF-111-18	77BF-101-18	2 90° / 1 90°	FL-44	1 90°	FL-44		FL-44	2 90°	FH			24 45°	SL1 = (FL-200)/12	-	-	24 45°	SH = FH-92	1 90° / 2 90°	FL-44	24 90°	SL1-12	-	-	-	-	-	-	-	-	1 90°	SH+6	1 90°	SH-14	-	-	-	-
			77BF-102-18																SH = FH-92																SH-10				
			77BF-103-18																SH = FH-77																SH-14				
	6B & 6C	77BF-111-18	77BF-101-18	2 90° / 1 90°	FL-44	1 90°	FL-44		FL-44						SL1 = (FL-228)/12				SH = FH-92	1 90° / 2 90°	FL-44	20 90°	SL1-12			4 90° / 45°	SL1+8	2 90° / 45°	SH+14	2 90° / 45°	SH+7				SH-10	2 90°	SH+1		
			77BF-102-18																SH = FH-92																SH-14				
			77BF-103-18																SH = FH-77																SH-10				
	6A*	77BF-111-18 + 77BF-401-18	77BF-101-18	2 90° / 1 90°	FL-44	1 90°	FL-44		FL-44	2 90°	FH			24 45°	SL1 = (FL-252)/12			24 45°	SH = FH-92	1 90° / 2 90°	FL-96	24 90°	SL1-12			-	-	-	-	-	-				SH-14	-	-		
			77BF-102-18																SH = FH-92																SH-10				
			77BF-103-18																SH = FH-77																SH-14				
	6B & 6C	77BF-111-18 + 77BF-401-18	77BF-101-18	2 90° / 1 90°	FL-44	1 90°	FL-44		FL-44			2 90°	FH-54						SH = FH-92	1 90° / 2 90°	FL-96	20 90°	SL1-12			4 90° / 45°	SL1+8	2 90° / 45°	SH+14	2 90° / 45°	SH+7				SH-10	2 90°	SH+1		
			77BF-102-18										FH-27						SH = FH-92																SH-14				
			77BF-103-18										FH-39						SH = FH-77																SH-10				
7 + 6	7A	77BF-111-18	77BF-101-18	2 90° / 1 90°	FL-44	1 90°	FL-44		FL-44	2 90°	FH			24 45°	SL1 = ((FL-226)/13)-3,5	2 45°	SL2=SL1+51	26 45°	SH = FH-92	1 90° / 2 90°	FL-44	24 90°	SL1-12	2 90°/45°	SL2+8	-	-	1 90° / 45°	SH+14	1 90° / 45°	SH+7	1 90°	SH+6	1 90°	SH-14	-	-	-	-
			77BF-102-18																SH = FH-92																SH-10				
			77BF-103-18																SH = FH-77																SH-14				
	7B & 7C	77BF-111-18	77BF-101-18	2 90° / 1 90°	FL-44	1 90°	FL-44		FL-44						SL1 = ((FL-240)/13)-3,5				SH = FH-92	1 90° / 2 90°	FL-44	22 90°	SL1-12			2 90° / 45°	SL1+8	2 90° / 45°	SH+14	2 90° / 45°	SH+7				SH-10	1 90°	SH+1	1 90°	SH-280
			77BF-102-18																SH = FH-92																SH-14				
			77BF-103-18																SH = FH-77																SH-10				
	7A*	77BF-111-18 + 77BF-401-18	77BF-101-18	2 90° / 1 90°	FL-44	1 90°	FL-44		FL-44	2 90°	FH			24 45°	SL1 = ((FL-278)/13)-3,5				SH = FH-92	1 90° / 2 90°	FL-96	24 90°	SL1-12			-	-	1 90° / 45°	SH+14	1 90° / 45°	SH+7				SH-14	-	-	-	-
			77BF-102-18																SH = FH-92																SH-10				
			77BF-103-18																SH = FH-77																SH-14				
	7B & 7C	77BF-111-18 + 77BF-401-18	77BF-101-18	2 90° / 1 90°	FL-44	1 90°	FL-44		FL-44			2 90°	FH-54						SH = FH-92	1 90° / 2 90°	FL-96	22 90°	SL1-12			2 90° / 45°	SL1+8	2 90° / 45°	SH+14	2 90° / 45°	SH+7				SH-10	1 90°	SH+1	1 90°	SH-280
			77BF-102-18										FH-27						SH = FH-92																SH-14				
			77BF-103-18										FH-39						SH = FH-77																SH-10				
7 + 7	6A	77BF-111-18	77BF-101-18	2 90° / 1 90°	FL-44	1 90°	FL-44		FL-44	2 90°	FH			28 45°	SL1 = (FL-224)/14	-	-	28 45°	SH = FH-92	1 90° / 2 90°	FL-44	28 90°	SL1-12	-	-	-	-	-	-	-	-	1 90°	SH+6	1 90°	SH-14	-	-	-	-
			77BF-102-18																SH = FH-92																SH-10				
			77BF-103-18																SH = FH-77																SH-14				
	6B & 6C	77BF-111-18	77BF-101-18	2 90° / 1 90°	FL-44	1 90°	FL-44		FL-44						SL1 = (FL-252)/14				SH = FH-92	1 90° / 2 90°	FL-44	24 90°	SL1-12			4 90° / 45°	SL1+8	2 90° / 45°	SH+14	2 90° / 45°	SH+7				SH-10	2 90°	SH+1		
			77BF-102-18																SH = FH-92																SH-14				
			77BF-103-18																SH = FH-77																SH-10				
	6A*	77BF-111-18 + 77BF-401-18	77BF-101-18	2 90° / 1 90°	FL-44	1 90°	FL-44		FL-44	2 90°	FH			28 45°	SL1 = (FL-276)/14			28 45°	SH = FH-92	1 90° / 2 90°	FL-96	28 90°	SL1-12			-	-	-	-	-	-				SH-14	-	-		
			77BF-102-18																SH = FH-92																SH-10				
			77BF-103-18																SH = FH-77																SH-14				
	6B & 6C	77BF-111-18 + 77BF-401-18	77BF-101-18	2 90° / 1 90°	FL-44	1 90°	FL-44		FL-44			2 90°	FH-54						SH = FH-92	1 90° / 2 90°	FL-96	24 90°	SL1-12			4 90° / 45°	SL1+8	2 90° / 45°	SH+14	2 90° / 45°	SH+7				SH-10	2 90°	SH+1		
			77BF-102-18										FH-27						SH = FH-92																SH-14				
			77BF-103-18										FH-39						SH = FH-77																SH-10				

PASSIVE / PASİF

90° **FORMULE DESCRIPTION** / FORMÜL AÇIKLAMALARI

INWARD OPENING / İÇE AÇILIR

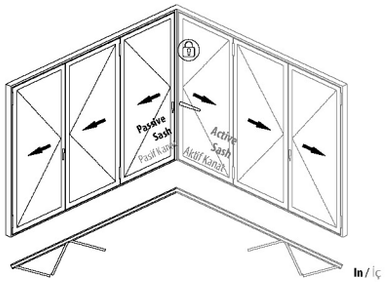

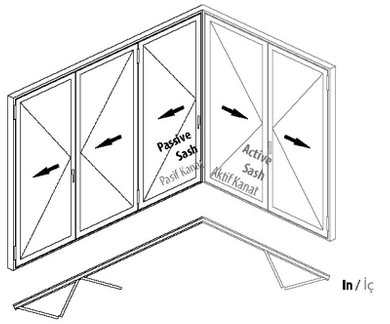

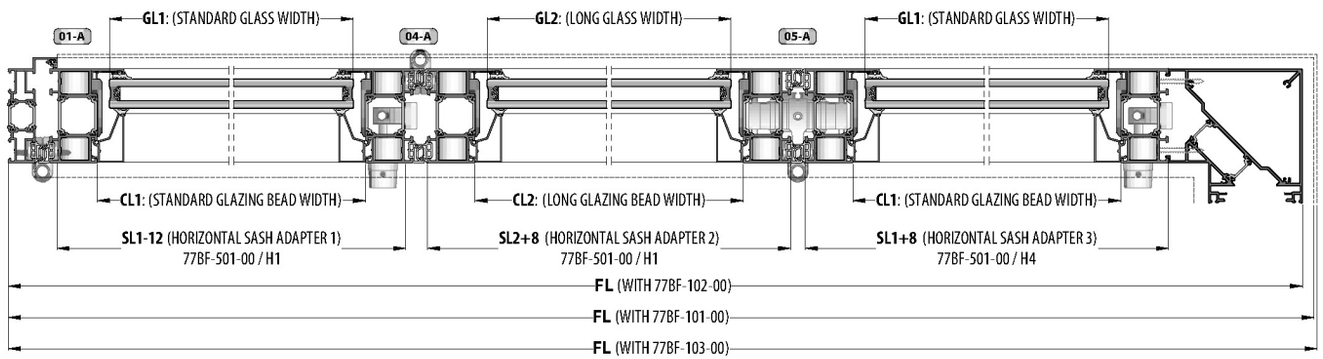

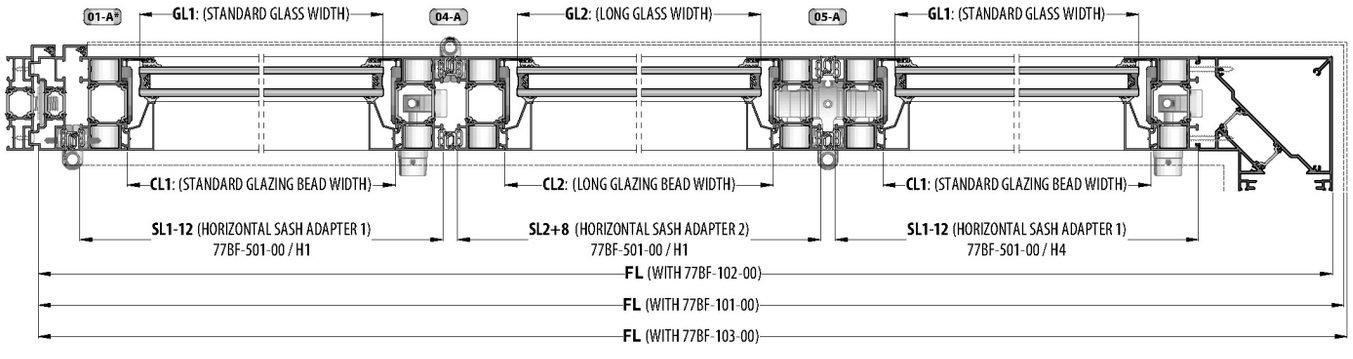

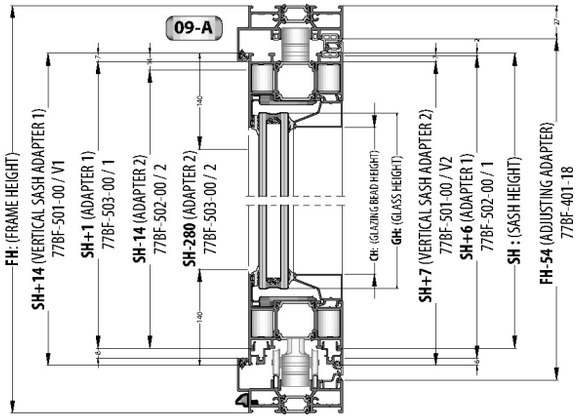

10-A **HORIZONTAL FRAME** / YATAY KASA **: 77BF-101-18**

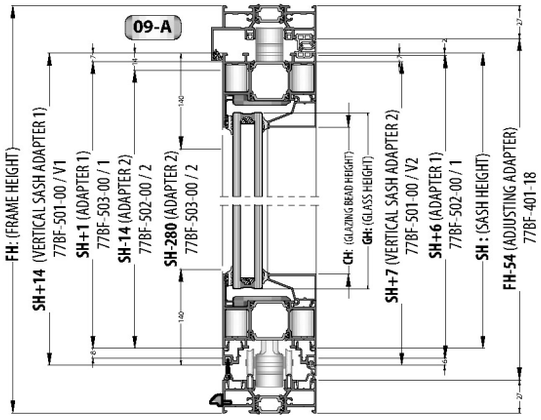

10-B **HORIZONTAL FRAME** / YATAY KASA **: 77BF-102-18**

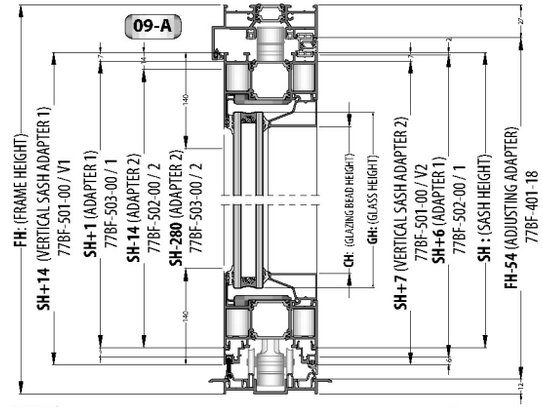

10-C **HORIZONTAL FRAME** / YATAY KASA **: 77BF-103-00**

PASSIVE / PASİF

90° **FORMULE DESCRIPTION** / FORMÜL AÇIKLAMALARI

OUTWARD OPENING / DIŞA AÇILIR

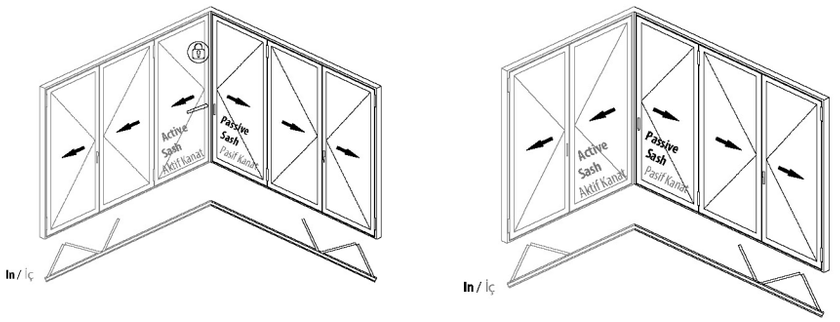

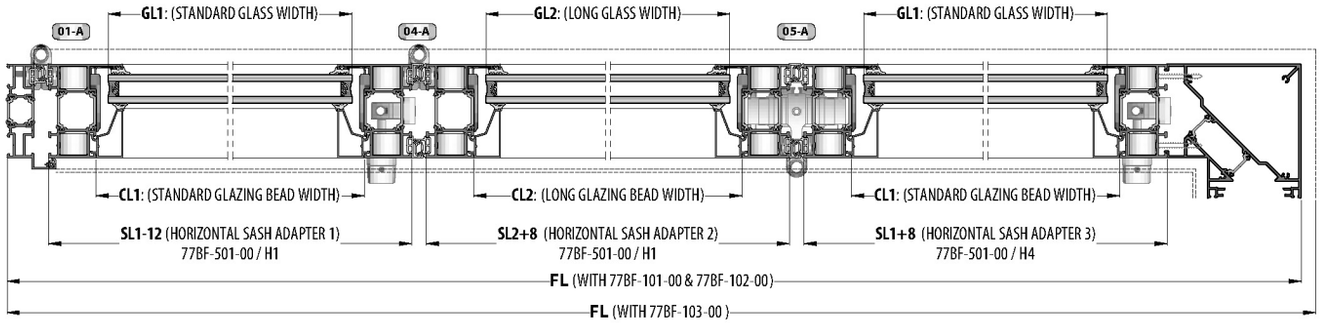

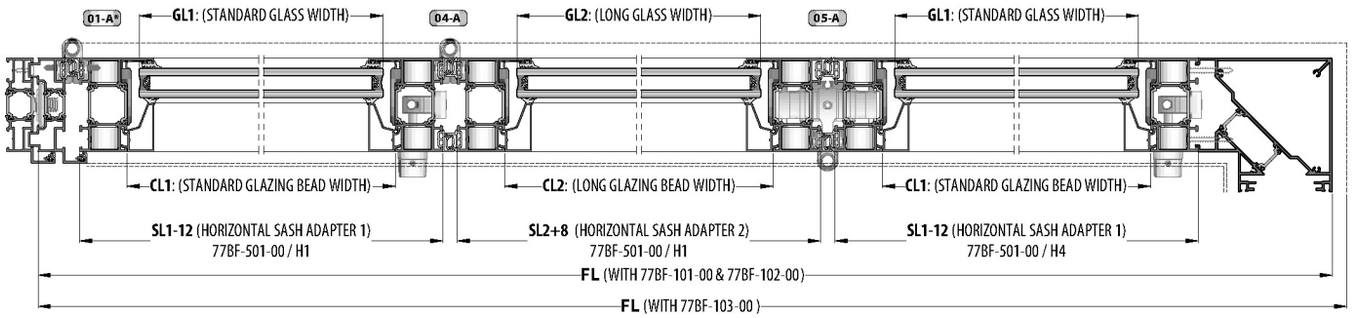

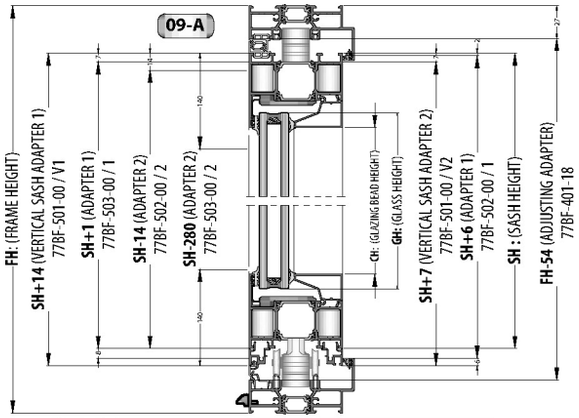

10-A **HORIZONTAL FRAME** / YATAY KASA **: 77BF-101-18**

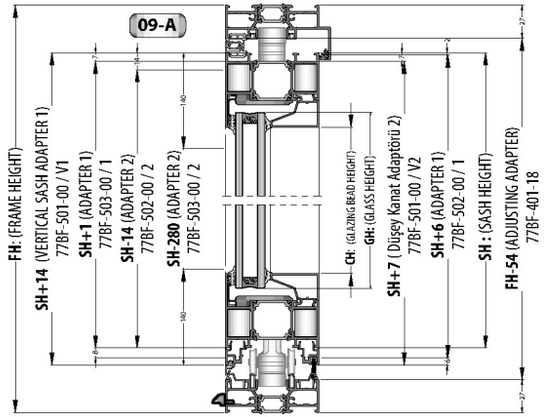

10-B **HORIZONTAL FRAME** / YATAY KASA **: 77BF-102-18**

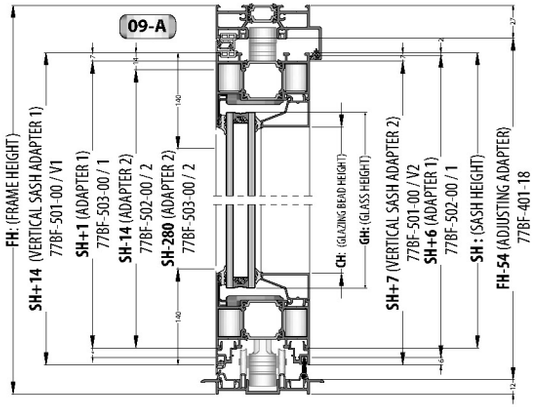

10-C **HORIZONTAL FRAME** / YATAY KASA **: 77BF-103-00**

PASSIVE / PASİF

90° **CORNER CUTTING SIZE LIST** / KÖŞE DÖNÜŞ KESİM ÖLÇÜ LİSTESİ

90° CUTTING SIZE / KESİM ÖLÇÜLERİ				GASKETS / FİTİLLER										GLASS / CAM 77BF-201-18						GLASS / CAM 77BF-202-18						GLAZING BEAD / CAM ÇITASI 77BF-201-18								GLAZING BEAD / CAM ÇITASI 77BF-202-18							
														GL1				GL2				GL1				GL2				CL1		CH		CL2		CH		CL1		CH		CL2		CH	
OPENING TYPE AÇILIM TİPİ	SECTION TYPE DETAY TİPİ	VERTICAL PROFILE DÜŞEY PROFİL	BOTTOM DETAIL TYPE ALT DETAY TİPİ	EM77BF-01	EM77BF-02	EM77BF-03	EM3-03	EM3-01	EM2-03	EM1-XX	O.RING-3 mm	AC77BF-421	EM45-05	QUANTITY MİKTAR	FORMULA FORMÜL Horizontal / Yatay	FORMULA FORMÜL Vertical / Düşey		QUANTITY MİKTAR	FORMULA FORMÜL Horizontal / Yatay	FORMULA FORMÜL Vertical / Düşey		QUANTITY MİKTAR	FORMULA FORMÜL Horizontal / Yatay	FORMULA FORMÜL Vertical / Düşey		QUANTITY MİKTAR	FORMULA FORMÜL Horizontal / Yatay	FORMULA FORMÜL Vertical / Düşey		QUANTITY MİKTAR	FORMULA FORMÜL Horizontal / Yatay	QUANTITY MİKTAR	FORMULA FORMÜL Vertical / Düşey	QUANTITY MİKTAR	FORMULA FORMÜL Horizontal / Yatay	QUANTITY MİKTAR	FORMULA FORMÜL Vertical / Düşey	QUANTITY MİKTAR	FORMULA FORMÜL Horizontal / Yatay	QUANTITY MİKTAR	FORMULA FORMÜL Vertical / Düşey	QUANTITY MİKTAR	FORMULA FORMÜL Horizontal / Yatay	QUANTITY MİKTAR	FORMULA FORMÜL Vertical / Düşey
1	2A	77BF-111-18	77BF-101-18	1FL + 1FH	1FL + 1FH	FL	2FL + 1FH	-	2 (CL1+CH1)	2 (CL1+CH1)	2 (CL1+CH1)	-	2 FL	1	GL1 = SL1-98	GH = SH-98		-	-	-		1	GL1 = SL1-88	GH = SH-88		-	-	-		2	CL1 = SL1-78	2	CH = SH-122	-	-	-	-	2	CL1 = SL1-78	2	CH = SH-106	-	-	-	-
			77BF-102-18				1FL + 1FH					1FL																														
			77BF-103-18				2FL + 2FH					-																														
	2A*	77BF-111-18 + 77BF-401-18	77BF-101-18				1FL + 2FH					1FL																														
			77BF-102-18																																						
			77BF-103-18																																						
3	2A	77BF-111-18	77BF-101-18	1FL + 5FH	1FL + 5FH	FL	2FL + 1FH	-	6 (CL1+CH1)	6 (CL1+CH1)	6 (CL1+CH1)	-	2 FL	3	GL1 = SL1-98	GH = SH-98		-	-	-		3	GL1 = SL1-88	GH = SH-88		-	-	-		6	CL1 = SL1-78	6	CH = SH-122	-	-	-	-	6	CL1 = SL1-78	6	CH = SH-106	-	-	-	-
			77BF-102-18				1FL + 1FH					1FL																														
			77BF-103-18				2FL + 2FH					-																														
	2A*	77BF-111-18 + 77BF-401-18	77BF-101-18				1FL + 2FH					1FL																														
			77BF-102-18																																						
			77BF-103-18																																						
5	2A	77BF-111-18	77BF-101-18	1FL + 9FH	1FL + 9FH	FL	2FL + 1FH	-	10 (CL1+CH1)	10 (CL1+CH1)	10 (CL1+CH1)	-	2 FL	5	GL1 = SL1-98	GH = SH-98		-	-	-		5	GL1 = SL1-88	GH = SH-88		-	-	-		10	CL1 = SL1-78	10	CH = SH-122	-	-	-	-	10	CL1 = SL1-78	10	CH = SH-106	-	-	-	-
			77BF-102-18				1FL + 1FH					1FL																														
			77BF-103-18				2FL + 2FH					-																														
	2A*	77BF-111-18 + 77BF-401-18	77BF-101-18				1FL + 2FH					1FL																														
			77BF-102-18																																						
			77BF-103-18																																						
7	2A	77BF-111-18	77BF-101-18	1FL + 13FH	1FL + 13FH	FL	2FL + 1FH	-	14 (CL1+CH1)	14 (CL1+CH1)	14 (CL1+CH1)	-	2 FL	7	GL1 = SL1-98	GH = SH-98		-	-	-		7	GL1 = SL1-88	GH = SH-88		-	-	-		14	CL1 = SL1-78	14	CH = SH-122	-	-	-	-	14	CL1 = SL1-78	14	CH = SH-106	-	-	-	-
			77BF-102-18				1FL + 1FH					1FL																														
			77BF-103-18				2FL + 2FH					-																														
	2A*	77BF-111-18 + 77BF-401-18	77BF-101-18				1FL + 2FH					1FL																														
			77BF-102-18																																						
			77BF-103-18																																						

PASSIVE / PASİF

90° **CORNER CUTTING SIZE LIST** / KÖŞE DÖNÜŞ KESİM ÖLÇÜ LİSTESİ

90° CUTTING SIZE / KESİM ÖLÇÜLERİ				INSIDE OPENING İÇE AÇILIR HORIZONTAL FRAME YATAY KASA 77BF-101-18		OUTSIDE OPENING DIŞA AÇILIR HORIZONTAL FRAME YATAY KASA 77BF-101-18		HORIZONTAL FRAME YATAY KASA 77BF-102-18		HORIZONTAL FRAME YATAY KASA 77BF-103-18		VERTICAL FRAME DÜŞEY KASA 77BF-111-18		ADJUSTING ADAPTER AYAR ADAPTÖRÜ 77BF-401-18		HORIZONTAL SASH 1 YATAY KANAT 1 77BF-201-18		HORIZONTAL SASH 2 YATAY KANAT 2 77BF-201-18		VERTICAL SASH DÜŞEY KANAT 77BF-201-18		INSIDE OPENING / İÇE AÇILIR FRAME ADAPTER KASA ADAPTÖRÜ 77BF-402-00		INSIDE OPENING / İÇE AÇILIR FRAME ADAPTER KASA ADAPTÖRÜ 77BF-402-00		HORIZONTAL SASH ADAPTER 1 YATAY KANAT ADAPTÖRÜ 1 77BF-501-00 / H1		HORIZONTAL SASH ADAPTER 2 YATAY KANAT ADAPTÖRÜ 2 77BF-501-00 / H4		CORNER ADAPTER KÖŞE DÖNÜŞ ADAPTÖR 77BF-515-00	
OPENING TYPE AÇILIM TİPİ	SECTION TYPE DETAY TİPİ	VERTICAL PROFILE DÜŞEY PROFİL	BOTTOM DETAIL TYPE ALT DETAY TİPİ	QUANTITY ANGULAR MİKTAR / AÇI	FORMULA / FORMÜL	QUANTITY ANGULAR MİKTAR / AÇI	FORMULA / FORMÜL	QUANTITY ANGULAR MİKTAR / AÇI	FORMULA / FORMÜL	QUANTITY ANGULAR MİKTAR / AÇI	FORMULA / FORMÜL	QUANTITY ANGULAR MİKTAR / AÇI	FORMULA / FORMÜL	QUANTITY ANGULAR MİKTAR / AÇI	FORMULA / FORMÜL	QUANTITY ANGULAR MİKTAR / AÇI	FORMULA / FORMÜL	QUANTITY ANGULAR MİKTAR / AÇI	FORMULA / FORMÜL	QUANTITY ANGULAR MİKTAR / AÇI	FORMULA / FORMÜL	QUANTITY ANGULAR MİKTAR / AÇI	FORMULA / FORMÜL	QUANTITY ANGULAR MİKTAR / AÇI	FORMULA / FORMÜL	QUANTITY ANGULAR MİKTAR / AÇI	FORMULA / FORMÜL	QUANTITY ANGULAR MİKTAR / AÇI	FORMULA / FORMÜL	QUANTITY ANGULAR MİKTAR / AÇI	FORMULA / FORMÜL
1	2A	77BF-111-18	77BF-101-18	2 90°/45°	FL-12,5	2 90°/45°	FL-22			1 90°/45°	FL-22	1 90°/45°	FL-10	1 90°	FH			2 45°	SL1 = FL-144	-	-	2 45°	SH = FH-92	1 90°/45°	FL-82	1 90°/45°	FL-23	-	-	2 90°	SL1-6	1 90°	SH-4
			77BF-102-18	1 90°/45°		1 90°/45°																2 90°/45°	SH = FH-92	2 90°/45°	FL-82 FL-23	2 90°/45°	FL-82 FL-23						
			77BF-103-18	1 90°/45°		1 90°/45°				1 90°/45°	FL-10											2 90°/45°	SH = FH-77	2 90°/45°	FL-82 FL-23	2 90°/45°	FL-82 FL-23						
	2A*	77BF-111-18 + 77BF-401-18	77BF-101-18	2 90°/45°	FL-12,5	2 90°/45°	FL-22									1 90°	FH-54					1 90°	SH = FH-92	1 90°	FL-108	1 90°	FL-49						
			77BF-102-18	1 90°/45°		1 90°/45°		1 90°/45°	FL-22						FH-27						2 90°	SH = FH-92	2 90°	FL-108 FL-49	2 90°	FL-108 FL-49						
			77BF-103-18	1 90°/45°		1 90°/45°		1 90°/45°	FL-22	1 90°/45°	FL-10				FH-39						2 90°	SH = FH-77	2 90°	FL-108 FL-49	2 90°	FL-108 FL-49						
3	2A	77BF-111-18	77BF-101-18	2 90°/45°	FL-12,5	2 90°/45°	FL-22			1 90°/45°	FL-22							6 45°	SL1 = (FL-168)/3	-	-	6 45°	SH = FH-92	1 90°/45°	FL-82	1 90°/45°	FL-23	4 90°	SL1-12	2 90°	SL1-6	1 90°	SH-4
			77BF-102-18	1 90°/45°		1 90°/45°																2 90°/45°	SH = FH-92	2 90°/45°	FL-82 FL-23	2 90°/45°	FL-82 FL-23						
			77BF-103-18	1 90°/45°		1 90°/45°				1 90°/45°	FL-10											2 90°/45°	SH = FH-77	2 90°/45°	FL-82 FL-23	2 90°/45°	FL-82 FL-23						
	2A*	77BF-111-18 + 77BF-401-18	77BF-101-18	2 90°/45°	FL-12,5	2 90°/45°	FL-22									1 90°	FH-54					1 90°	SH = FH-92	1 90°	FL-108	1 90°	FL-49						
			77BF-102-18	1 90°/45°		1 90°/45°		1 90°/45°	FL-22						FH-27						2 90°	SH = FH-92	2 90°	FL-108 FL-49	2 90°	FL-108 FL-49						
			77BF-103-18	1 90°/45°		1 90°/45°		1 90°/45°	FL-22	1 90°/45°	FL-10				FH-39						2 90°	SH = FH-77	2 90°	FL-108 FL-49	2 90°	FL-108 FL-49						
5	2A	77BF-111-18	77BF-101-18	2 90°/45°	FL-12,5	2 90°/45°	FL-22			1 90°/45°	FL-22							10 45°	SL1 = (FL-192)/5	-	-	10 45°	SH = FH-92	1 90°/45°	FL-82	1 90°/45°	FL-23	8 90°	SL1-12	2 90°	SL1-6	1 90°	SH-4
			77BF-102-18	1 90°/45°		1 90°/45°																2 90°/45°	SH = FH-92	2 90°/45°	FL-82 FL-23	2 90°/45°	FL-82 FL-23						
			77BF-103-18	1 90°/45°		1 90°/45°				1 90°/45°	FL-10											2 90°/45°	SH = FH-77	2 90°/45°	FL-82 FL-23	2 90°/45°	FL-82 FL-23						
	2A*	77BF-111-18 + 77BF-401-18	77BF-101-18	2 90°/45°	FL-12,5	2 90°/45°	FL-22									1 90°	FH-54					1 90°	SH = FH-92	1 90°	FL-108	1 90°	FL-49						
			77BF-102-18	1 90°/45°		1 90°/45°		1 90°/45°	FL-22						FH-27						2 90°	SH = FH-92	2 90°	FL-108 FL-49	2 90°	FL-108 FL-49						
			77BF-103-18	1 90°/45°		1 90°/45°		1 90°/45°	FL-22	1 90°/45°	FL-10				FH-39						2 90°	SH = FH-77	2 90°	FL-108 FL-49	2 90°	FL-108 FL-49						
7	2A	77BF-111-18	77BF-101-18	2 90°/45°	FL-12,5	2 90°/45°	FL-22			1 90°/45°	FL-22							10 45°	SL1 = (FL-216)/7	-	-	14 45°	SH = FH-92	1 90°/45°	FL-82	1 90°/45°	FL-23	12 90°	SL1-12	2 90°	SL1-6	1 90°	SH-4
			77BF-102-18	1 90°/45°		1 90°/45°																2 90°/45°	SH = FH-92	2 90°/45°	FL-82 FL-23	2 90°/45°	FL-82 FL-23						
			77BF-103-18	1 90°/45°		1 90°/45°				1 90°/45°	FL-10											2 90°/45°	SH = FH-77	2 90°/45°	FL-82 FL-23	2 90°/45°	FL-82 FL-23						
	2A*	77BF-111-18 + 77BF-401-18	77BF-101-18	2 90°/45°	FL-12,5	2 90°/45°	FL-22									1 90°	FH-54					1 90°	SH = FH-92	1 90°	FL-108	1 90°	FL-49						
			77BF-102-18	1 90°/45°		1 90°/45°		1 90°/45°	FL-22						FH-27						2 90°	SH = FH-92	2 90°	FL-108 FL-49	2 90°	FL-108 FL-49						
			77BF-103-18	1 90°/45°		1 90°/45°		1 90°/45°	FL-22	1 90°/45°	FL-10				FH-39						2 90°	SH = FH-77	2 90°	FL-108 FL-49	2 90°	FL-108 FL-49						

ACTIVE / AKTİF

90° **FORMULE DESCRIPTION** / FORMÜL AÇIKLAMALARI

INWARD OPENING / İÇE AÇILIR

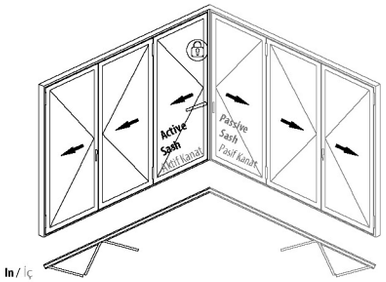

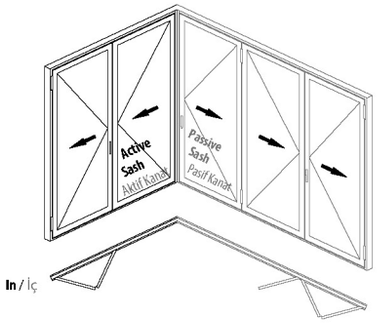

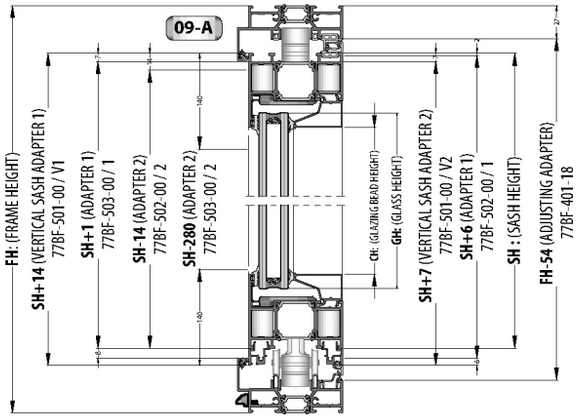

10-A HORIZONTAL FRAME / YATAY KASA : 77BF-101-18

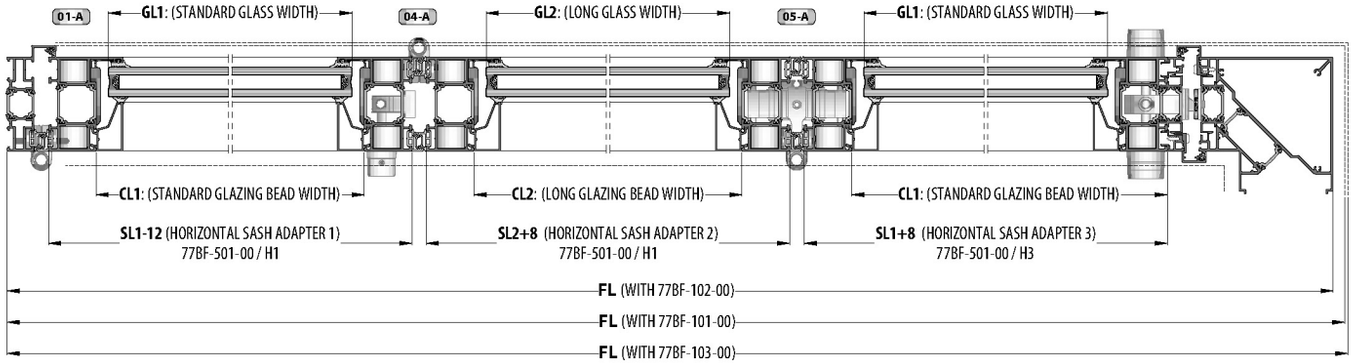

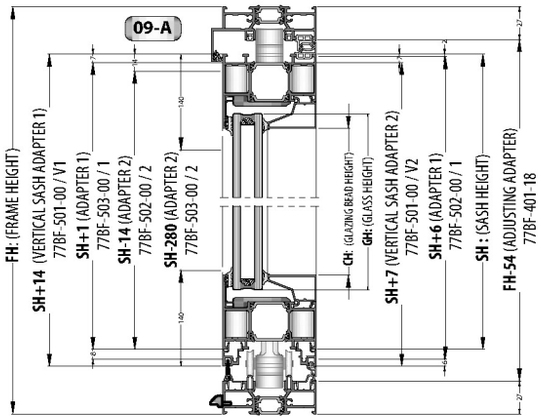

10-B HORIZONTAL FRAME / YATAY KASA : 77BF-102-18

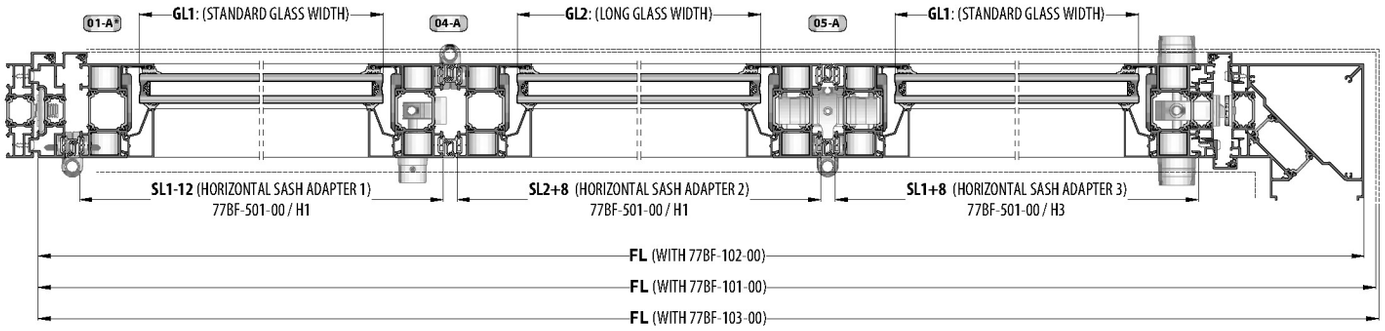

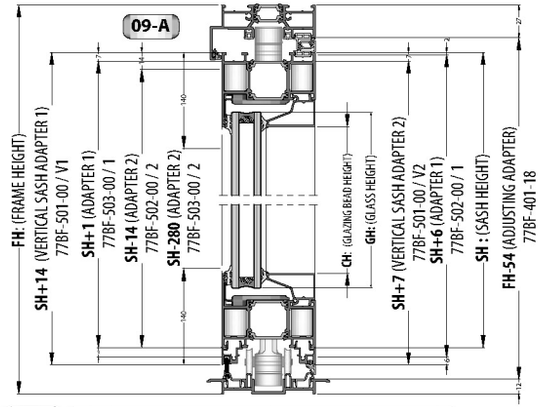

10-C HORIZONTAL FRAME / YATAY KASA : 77BF-103-00

ACTIVE / AKTİF

90° **FORMULE DESCRIPTION** / FORMÜL AÇIKLAMALARI

OUTWARD OPENING / DIŞA AÇILIR

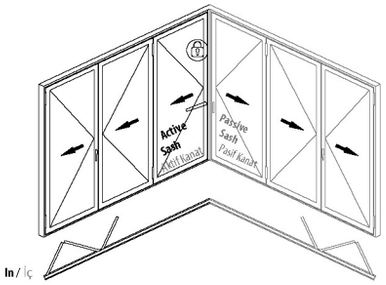

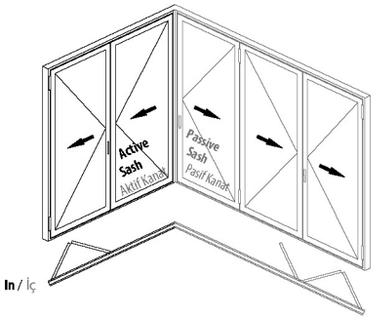

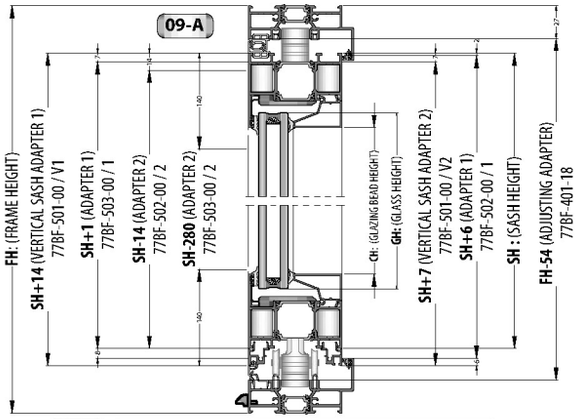

10-A HORIZONTAL FRAME / YATAY KASA : 77BF-101-18

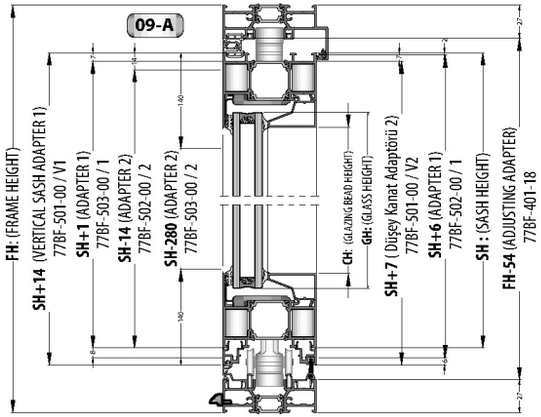

10-B HORIZONTAL FRAME / YATAY KASA : 77BF-102-18

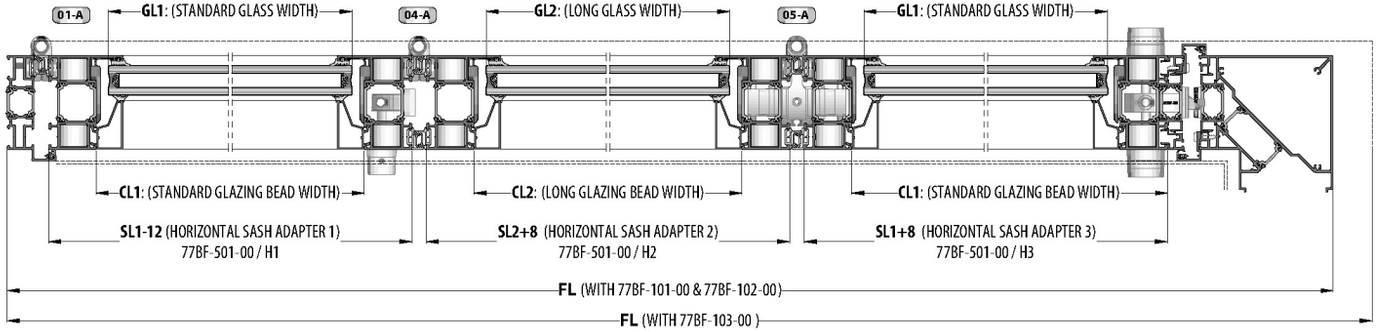

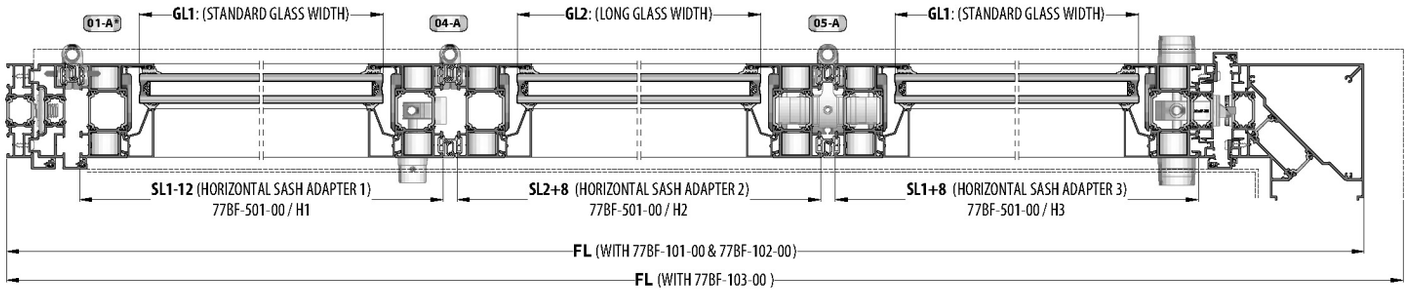

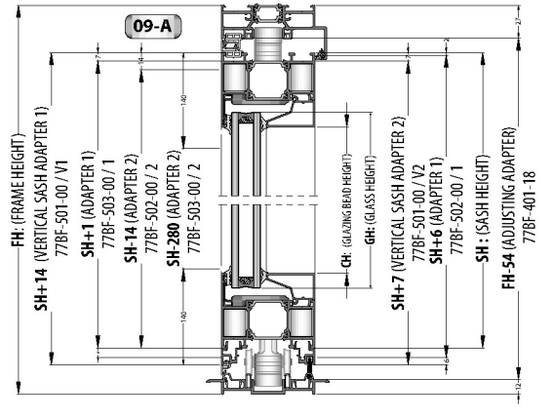

10-C HORIZONTAL FRAME / YATAY KASA : 77BF-103-00

ACTIVE / AKTİF

90° **CORNER CUTTING SIZE LIST** / KÖŞE DÖNÜŞ KESİM ÖLÇÜ LİSTESİ

90° CUTTING SIZE / KESİM ÖLÇÜLERİ				GASKETS / FİTİLLER										GLASS / CAM 77BF-201-18						GLASS / CAM 77BF-202-18						GLAZING BEAD / CAM ÇITASI 77BF-201-18								GLAZING BEAD / CAM ÇITASI 77BF-202-18							
OPENING TYPE AÇILIM TİPİ	SECTION TYPE DETAY TİPİ	VERTICAL PROFILE DÜŞEY PROFİL	BOTTOM DETAIL TYPE ALT DETAY TİPİ	EM77BF-01	EM77BF-02	EM77BF-03	EM3-03	EM3-01	EM2-03	EM1-XX	O.RING-3 mm	AC77BF-421	EM45-05	GL1			GL2			GL1			GL2			CL1			CH			CL2			CH			CL1			CH			CL2			CH		
														QUANTITY MIKTAR	FORMULA FORMÜL Horizontal / Yatay	FORMULA FORMÜL Vertical / Düşey	QUANTITY MIKTAR	FORMULA FORMÜL Horizontal / Yatay	FORMULA FORMÜL Vertical / Düşey	QUANTITY MIKTAR	FORMULA FORMÜL Horizontal / Yatay	FORMULA FORMÜL Vertical / Düşey	QUANTITY MIKTAR	FORMULA FORMÜL Horizontal / Yatay		QUANTITY MIKTAR	FORMULA FORMÜL Vertical / Düşey		QUANTITY MIKTAR	FORMULA FORMÜL Horizontal / Yatay		QUANTITY MIKTAR	FORMULA FORMÜL Vertical / Düşey		QUANTITY MIKTAR	FORMULA FORMÜL Horizontal / Yatay		QUANTITY MIKTAR	FORMULA FORMÜL Vertical / Düşey		QUANTITY MIKTAR	FORMULA FORMÜL Horizontal / Yatay		QUANTITY MIKTAR	FORMULA FORMÜL Vertical / Düşey	
1	3A	77BF-111-18	77BF-101-18	1FL + 1FH	1FL + 1FH	FL	2FL + 3FH	-	2 (CL1+CH1)	2 (CL1+CH1)	2 (CL1+CH1)	-	2 FL	1	GL1 = SL1-98	GH = SH-98	-	-	-	1	GL1 = SL1-88	GH = SH-88	-	-	-	2	CL1 = SL1-78		2	CH = SH-122		-	-		-	-		2	CL1 = SL1-78		2	CH = SH-106		-	-		-	-	
			77BF-102-18				1FL + 3FH					1FL																																
			77BF-103-18				2FL + 4FH					-																																
	3A*	77BF-111-18 + 77BF-401-18	77BF-101-18				1FL + 4FH					1FL																																
			77BF-102-18																																								
			77BF-103-18																																								
2	3A	77BF-111-18	77BF-101-18	1FL + 3FH	1FL + 3FH	FL	2FL + 2FH	FH	2 (CL1+CH1) + 2 (CL2 +CH2)	2 (CL1+CH1) + 2 (CL2 +CH2)	2 (CL1+CH1) + 2 (CL2 +CH2)	-	2 FL	1	GL1 = SL1-98	GH = SH-98	1	GL2 = SL2-98	GH = SH-98	1	GL1 = SL1-88	GH = SH-88	1	GL2 = SL2-88	GH = SH-88	2	CL1 = SL1-78		2	CH = SH-122		2	CL2 = SL2-78		2	CH = SH-122		2	CL1 = SL1-78		2	CH = SH-106		2	CL2 = SL2-78		2	CH = SH-106	
			77BF-102-18				1FL + 3FH					1FL																																
			77BF-103-18				2FL + 2FH					-																																
	3A*	77BF-111-18 + 77BF-401-18	77BF-101-18				1FL + 3FH					1FL																																
			77BF-102-18																																								
			77BF-103-18																																								
3	2B & 2C	77BF-111-18	77BF-101-18	1FL + 5FH	1FL + 5FH	FL	2FL + 3FH	-	6 (CL1+CH1)	6 (CL1+CH1)	6 (CL1+CH1)	-	2 FL	3	GL1 = SL1-98	GH = SH-98	-	-	-	3	GL1 = SL1-88	GH = SH-88	-	-	-	6	CL1 = SL1-78		6	CH = SH-122		-	-		-	-		6	CL1 = SL1-78		6	CH = SH-106		-	-		-	-	
			77BF-102-18				1FL + 3FH					1FL																																
			77BF-103-18				2FL + 4FH					-																																
	2B & 2C	77BF-111-18 + 77BF-401-18	77BF-101-18				1FL + 4FH					1FL																																
			77BF-102-18																																								
			77BF-103-18																																								
4	3A	77BF-111-18	77BF-101-18	1FL + 7FH	1FL + 7FH	FL	2FL + 2FH	FH	4 (CL1+CH1) + 4 (CL2 +CH2)	4 (CL1+CH1) + 4 (CL2 +CH2)	4 (CL1+CH1) + 4 (CL2 +CH2)	-	2 FL	3	GL1 = SL1-98	GH = SH-98	1	GL2 = SL2-98	GH = SH-98	3	GL1 = SL1-88	GH = SH-88	1	GL2 = SL2-88	GH = SH-88	6	CL1 = SL1-78		6	CH = SH-122		2	CL2 = SL2-78		2	CH = SH-122		6	CL1 = SL1-78		6	CH = SH-106		2	CL2 = SL2-78		2	CH = SH-106	
			77BF-102-18				1FL + 3FH					1FL																																
			77BF-103-18				2FL + 2FH					-																																
	3A*	77BF-111-18 + 77BF-401-18	77BF-101-18				1FL + 3FH					1FL																																
			77BF-102-18																																								
			77BF-103-18																																								
5	2B & 2C	77BF-111-18	77BF-101-18	1FL + 9FH	1FL + 9FH	FL	2FL + 3FH	-	10 (CL1+CH1)	10 (CL1+CH1)	10 (CL1+CH1)	-	2 FL	5	GL1 = SL1-98	GH = SH-98	-	-	-	5	GL1 = SL1-88	GH = SH-88	-	-	-	10	CL1 = SL1-78		10	CH = SH-122		-	-		-	-		10	CL1 = SL1-78		10	CH = SH-106		-	-		-	-	
			77BF-102-18				1FL + 3FH					1FL																																
			77BF-103-18				2FL + 4FH					-																																
	2B & 2C	77BF-111-18 + 77BF-401-18	77BF-101-18				1FL + 4FH					1FL																																
			77BF-102-18																																								
			77BF-103-18																																								
6	3A	77BF-111-18	77BF-101-18	1FL + 11FH	1FL + 11FH	FL	2FL + 2FH	FH	6 (CL1+CH1) + 6 (CL2 +CH2)	6 (CL1+CH1) + 6 (CL2 +CH2)	6 (CL1+CH1) + 6 (CL2 +CH2)	-	2 FL	5	GL1 = SL1-98	GH = SH-98	1	GL2 = SL2-98	GH = SH-98	5	GL1 = SL1-88	GH = SH-88	1	GL2 = SL2-88	GH = SH-88	10	CL1 = SL1-78		10	CH = SH-122		2	CL2 = SL2-78		2	CH = SH-122		10	CL1 = SL1-78		10	CH = SH-106		2	CL2 = SL2-78		2	CH = SH-106	
			77BF-102-18				1FL + 3FH					1FL																																
			77BF-103-18				2FL + 2FH					-																																
	3A*	77BF-111-18 + 77BF-401-18	77BF-101-18				1FL + 3FH					1FL																																
			77BF-102-18																																								
			77BF-103-18																																								

ACTIVE / AKTİF

90° **CORNER CUTTING SIZE LIST** / KÖŞE DÖNÜŞ KESİM ÖLÇÜ LİSTESİ

90° CUTTING SIZE / KESİM ÖLÇÜLERİ				INSIDE OPENING İÇE AÇILIR HORIZONTAL FRAME YATAY KASA 77BF-101-18		OUTSIDE OPENING DIŞA AÇILIR HORIZONTAL FRAME YATAY KASA 77BF-101-18		HORIZONTAL FRAME YATAY KASA 77BF-102-18		HORIZONTAL FRAME YATAY KASA 77BF-103-18		VERTICAL FRAME DÜŞEY KASA 77BF-111-18		ADJUSTING ADAPTER AYAR ADAPTÖRÜ 77BF-401-18		HORIZONTAL SASH 1 YATAY KANAT 1 77BF-201-18		HORIZONTAL SASH 2 YATAY KANAT 2 77BF-201-18		VERTICAL SASH DÜŞEY KANAT 77BF-201-18		INSIDE OPENING İÇE AÇILIR FRAME ADAPTER KASA ADAPTÖRÜ 77BF-402-00		OUTSIDE OPENING DIŞA AÇILIR FRAME ADAPTER KASA ADAPTÖRÜ 77BF-402-00		HORIZONTAL SASH ADAPTER 1 YATAY KANAT ADAPTÖRÜ 1 77BF-501-00 H1		HORIZONTAL SASH ADAPTER 2 YATAY KANAT ADAPTÖRÜ 2 77BF-501-00 H2		HORIZONTAL SASH ADAPTER 3 YATAY KANAT ADAPTÖRÜ 3 77BF-501-00 H3		VERTICAL SASH ADAPTER 1 DÜŞEY KANAT ADAPTÖRÜ 1 77BF-501-00 V1		VERTICAL SASH ADAPTER 2 DÜŞEY KANAT ADAPTÖRÜ 2 77BF-501-00 V2		ADAPTER 1 ADAPTÖR 1 77BF-502-00 1		ADAPTER 2 ADAPTÖR 2 77BF-502-00 / 2		ADAPTER 1 ADAPTÖR 1 77BF-503-00 1		ADAPTER 2 ADAPTÖR 2 77BF-503-00 2	
OPENING TYPE AÇILIM TİPİ	SECTION TYPE DETAY TİPİ	VERTICAL PROFILE DÜŞEY PROFİL	BOTTOM DETAIL TYPE ALT DETAY TİPİ	QUANTITY ANGULAR MİKTAR / AÇI	FORMULA / FORMÜL	QUANTITY ANGULAR MİKTAR / AÇI	FORMULA / FORMÜL	QUANTITY ANGULAR MİKTAR / AÇI	FORMULA / FORMÜL	QUANTITY ANGULAR MİKTAR / AÇI	FORMULA / FORMÜL	QUANTITY ANGULAR MİKTAR / AÇI	FORMULA / FORMÜL	QUANTITY ANGULAR MİKTAR / AÇI	FORMULA / FORMÜL	QUANTITY ANGULAR MİKTAR / AÇI	FORMULA / FORMÜL	QUANTITY ANGULAR MİKTAR / AÇI	FORMULA / FORMÜL	QUANTITY ANGULAR MİKTAR / AÇI	FORMULA / FORMÜL	QUANTITY ANGULAR MİKTAR / AÇI	FORMULA / FORMÜL	QUANTITY ANGULAR MİKTAR / AÇI	FORMULA / FORMÜL	QUANTITY ANGULAR MİKTAR / AÇI	FORMULA / FORMÜL	QUANTITY ANGULAR MİKTAR / AÇI	FORMULA / FORMÜL	QUANTITY ANGULAR MİKTAR / AÇI	FORMULA / FORMÜL	QUANTITY ANGULAR MİKTAR / AÇI	FORMULA / FORMÜL	QUANTITY ANGULAR MİKTAR / AÇI	FORMULA / FORMÜL	QUANTITY ANGULAR MİKTAR / AÇI	FORMULA / FORMÜL
1	3A	77BF-111-18	77BF-101-18	2 90°/45° 1 90°/45° 1 90°/45°	FL-12,5	2 90°/45° 1 90°/45° 1 90°/45°	FL-22	1 90°/45°	FL-22	1 90°/45°	FL-10	1 90°	FH	1 90°	FH-54 FH-27 FH-39	2 45°	SL1 = FL-170	-	-	2 45°	SH = FH-92 SH = FH-92 SH = FH-77 SH = FH-92 SH = FH-92 SH = FH-77	1 90°/45° 2 90°/45° 2 90°/45° 1 90° 2 90° 2 90°	FL-82 FL-82 FL-82 FL-108 FL-108 FL-108	FL-23 FL-23 FL-23 FL-49 FL-49 FL-49	1 90°/45° 2 90°/45° 2 90°/45° 1 90° 2 90° 2 90°	FL-23 FL-23 FL-23 FL-49 FL-49 FL-49	-	-	-	-	2 90° / 45°	SH+8	1 90° / 45°	SH+14	1 90° / 45°	SH+7	1 90°	SH+6	1 90°	SH-14 SH-10 SH-14 SH-10	1 90°	SH-4	1 90°	SH-4
	3A*	77BF-111-18 + 77BF-401-18	77BF-101-18	2 90°/45° 1 90°/45° 1 90°/45°	FL-12,5	2 90°/45° 1 90°/45° 1 90°/45°	FL-22	1 90°/45°	FL-22	1 90°/45°	FL-10						SL1 = FL-196																								
			77BF-102-18																																				
			77BF-103-18																																				
2	3A	77BF-111-18	77BF-101-18	2 90°/45° 1 90°/45° 1 90°/45°	FL-12,5	2 90°/45° 1 90°/45° 1 90°/45°	FL-22	1 90°/45°	FL-22	1 90°/45°	FL-10	1 90°	FH	1 90°	FH-54 FH-27 FH-39	2 45°	SL1 = ((FL-182)/2)-23	2 45°	SL2=SL1+51	4 45°	SH = FH-92 SH = FH-92 SH = FH-77 SH = FH-92 SH = FH-92 SH = FH-77	1 90°/45° 2 90°/45° 2 90°/45° 1 90° 2 90° 2 90°	FL-82 FL-82 FL-82 FL-108 FL-108 FL-108	FL-23 FL-23 FL-23 FL-49 FL-49 FL-49	1 90°/45° 2 90°/45° 2 90°/45° 1 90° 2 90° 2 90°	FL-23 FL-23 FL-23 FL-49 FL-49 FL-49	2 90°	SL1-12	2 90°/45°	SL2+8	-	-	1 90° / 45°	SH+14	1 90° / 45°	SH+7	1 90°	SH+6	1 90°	SH-14 SH-10 SH-14 SH-10	1 90°	SH-4	-	-
	3A*	77BF-111-18 + 77BF-401-18	77BF-101-18	2 90°/45° 1 90°/45° 1 90°/45°	FL-12,5	2 90°/45° 1 90°/45° 1 90°/45°	FL-22	1 90°/45°	FL-22	1 90°/45°	FL-10						SL1 = ((FL-208)/2)-23																								
			77BF-102-18																																				
			77BF-103-18																																				
3	2B & 2C	77BF-111-18	77BF-101-18	2 90°/45° 1 90°/45° 1 90°/45°	FL-12,5	2 90°/45° 1 90°/45° 1 90°/45°	FL-22	1 90°/45°	FL-22	1 90°/45°	FL-10	1 90°	FH	1 90°	FH-54 FH-27 FH-39	6 45°	SL1 = (FL-194)/3	-	-	6 45°	SH = FH-92 SH = FH-92 SH = FH-77 SH = FH-92 SH = FH-92 SH = FH-77	1 90°/45° 2 90°/45° 2 90°/45° 1 90° 2 90° 2 90°	FL-82 FL-82 FL-82 FL-108 FL-108 FL-108	FL-23 FL-23 FL-23 FL-49 FL-49 FL-49	1 90°/45° 2 90°/45° 2 90°/45° 1 90° 2 90° 2 90°	FL-23 FL-23 FL-23 FL-49 FL-49 FL-49	4 90°	SL1-12	-	-	2 90° / 45° 2 90° / 45°	SL1+8 SL1+8	1 90° / 45°	SH+14	1 90° / 45°	SH+7	1 90°	SH+6	1 90°	SH-14 SH-10 SH-14 SH-10	1 90°	SH-4	1 90°	SH+1
	2B & 2C	77BF-111-18 + 77BF-401-18	77BF-101-18	2 90°/45° 1 90°/45° 1 90°/45°	FL-12,5	2 90°/45° 1 90°/45° 1 90°/45°	FL-22	1 90°/45°	FL-22	1 90°/45°	FL-10						SL1 = ((FL-218)/5																								
			77BF-102-18																																				
			77BF-103-18																																				
4	3A	77BF-111-18	77BF-101-18	2 90°/45° 1 90°/45° 1 90°/45°	FL-12,5	2 90°/45° 1 90°/45° 1 90°/45°	FL-22	1 90°/45°	FL-22	1 90°/45°	FL-10	1 90°	FH	1 90°	FH-54 FH-27 FH-39	6 45°	SL1 = ((FL-206)/4)-11,5	2 45°	SL2=SL1+51	8 45°	SH = FH-92 SH = FH-92 SH = FH-77 SH = FH-92 SH = FH-92 SH = FH-77	1 90°/45° 2 90°/45° 2 90°/45° 1 90° 2 90° 2 90°	FL-82 FL-82 FL-82 FL-108 FL-108 FL-108	FL-23 FL-23 FL-23 FL-49 FL-49 FL-49	1 90°/45° 2 90°/45° 2 90°/45° 1 90° 2 90° 2 90°	FL-23 FL-23 FL-23 FL-49 FL-49 FL-49	6 90°	SL1-12	2 90°/45°	SL2+8	-	-	1 90° / 45°	SH+14	1 90° / 45°	SH+7	1 90°	SH+6	1 90°	SH-14 SH-10 SH-14 SH-10	1 90°	SH-4	-	-
	3A*	77BF-111-18 + 77BF-401-18	77BF-101-18	2 90°/45° 1 90°/45° 1 90°/45°	FL-12,5	2 90°/45° 1 90°/45° 1 90°/45°	FL-22	1 90°/45°	FL-22	1 90°/45°	FL-10						SL1 = ((FL-232)/4)-11,5																								
			77BF-102-18																																				
			77BF-103-18																																				
5	2B & 2C	77BF-111-18	77BF-101-18	2 90°/45° 1 90°/45° 1 90°/45°	FL-12,5	2 90°/45° 1 90°/45° 1 90°/45°	FL-22	1 90°/45°	FL-22	1 90°/45°	FL-10	1 90°	FH	1 90°	FH-54 FH-27 FH-39	10 45°	SL1 = (FL-218)/5	-	-	10 45°	SH = FH-92 SH = FH-92 SH = FH-77 SH = FH-92 SH = FH-92 SH = FH-77	1 90°/45° 2 90°/45° 2 90°/45° 1 90° 2 90° 2 90°	FL-82 FL-82 FL-82 FL-108 FL-108 FL-108	FL-23 FL-23 FL-23 FL-49 FL-49 FL-49	1 90°/45° 2 90°/45° 2 90°/45° 1 90° 2 90° 2 90°	FL-23 FL-23 FL-23 FL-49 FL-49 FL-49	8 90°	SL1-12	-	-	2 90° / 45° 2 90° / 45°	SL1+8 SL1+8	1 90° / 45°	SH+14	1 90° / 45°	SH+7	1 90°	SH+6	1 90°	SH-14 SH-10 SH-14 SH-10	1 90°	SH-4	1 90°	SH+1
	2B & 2C	77BF-111-18 + 77BF-401-18	77BF-101-18	2 90°/45° 1 90°/45° 1 90°/45°	FL-12,5	2 90°/45° 1 90°/45° 1 90°/45°	FL-22	1 90°/45°	FL-22	1 90°/45°	FL-10						SL1 = ((FL-244)/5																								
			77BF-102-18																																				
			77BF-103-18																																				
6	3A	77BF-111-18	77BF-101-18	2 90°/45° 1 90°/45° 1 90°/45°	FL-12,5	2 90°/45° 1 90°/45° 1 90°/45°	FL-22	1 90°/45°	FL-22	1 90°/45°	FL-10	1 90°	FH	1 90°	FH-54 FH-27 FH-39	10 45°	SL1 = ((FL-230)/6)-7,6	2 45°	SL2=SL1+51	12 45°	SH = FH-92 SH = FH-92 SH = FH-77 SH = FH-92 SH = FH-92 SH = FH-77	1 90°/45° 2 90°/45° 2 90°/45° 1 90° 2 90° 2 90°	FL-82 FL-82 FL-82 FL-108 FL-108 FL-108	FL-23 FL-23 FL-23 FL-49 FL-49 FL-49	1 90°/45° 2 90°/45° 2 90°/45° 1 90° 2 90° 2 90°	FL-23 FL-23 FL-23 FL-49 FL-49 FL-49	10 90°	SL1-12	2 90°/45°	SL2+8	-	-	1 90° / 45°	SH+14	1 90° / 45°	SH+7	1 90°	SH+6	1 90°	SH-14 SH-10 SH-14 SH-10	1 90°	SH-4	-	-
	3A*	77BF-111-18 + 77BF-401-18	77BF-101-18	2 90°/45° 1 90°/45° 1 90°/45°	FL-12,5	2 90°/45° 1 90°/45° 1 90°/45°	FL-22	1 90°/45°	FL-22	1 90°/45°	FL-10						SL1 = ((FL-256)/6)-7,6																								
			77BF-102-18																																				
			77BF-103-18																																				

ACTIVE / AKTİF

90° **CORNER CUTTING SIZE LIST** / KÖŞE DÖNÜŞ KESİM ÖLÇÜ LİSTESİ

90° CUTTING SIZE / KESİM ÖLÇÜLERİ				GASKETS / FİTİLLER										GLASS / CAM 77BF-201-18						GLASS / CAM 77BF-202-18						GLAZING BEAD / CAM ÇİTASI 77BF-201-18								GLAZING BEAD / CAM ÇİTASI 77BF-202-18							
														GL1			GL2			GL1			GL2			CL1		CH		CL2		CH		CL1		CH		CL2		CH	
OPENING TYPE AÇILIM TİPİ	SECTION TYPE DETAY TİPİ	VERTICAL PROFILE DÜŞEY PROFİL	BOTTOM DETAIL TYPE ALT DETAY TİPİ	EM77BF-01	EM77BF-02	EM77BF-03	EM3-03	EM3-01	EM2-03	EM1-XX	O.RING-3 mm	AC77BF-421	EM45-05	QUANTITY MİKTAR	FORMULA FORMÜL Horizontal / Yatay	FORMULA FORMÜL Vertical / Düşey	QUANTITY MİKTAR	FORMULA FORMÜL Horizontal / Yatay	FORMULA FORMÜL Vertical / Düşey	QUANTITY MİKTAR	FORMULA FORMÜL Horizontal / Yatay	FORMULA FORMÜL Vertical / Düşey	QUANTITY MİKTAR	FORMULA FORMÜL Horizontal / Yatay	FORMULA FORMÜL Vertical / Düşey	QUANTITY MİKTAR	FORMULA FORMÜL Horizontal / Yatay	QUANTITY MİKTAR	FORMULA FORMÜL Vertical / Düşey	QUANTITY MİKTAR	FORMULA FORMÜL Horizontal / Yatay	QUANTITY MİKTAR	FORMULA FORMÜL Vertical / Düşey	QUANTITY MİKTAR	FORMULA FORMÜL Horizontal / Yatay	QUANTITY MİKTAR	FORMULA FORMÜL Vertical / Düşey	QUANTITY MİKTAR	FORMULA FORMÜL Horizontal / Yatay	QUANTITY MİKTAR	FORMULA FORMÜL Vertical / Düşey
7	2B & 2C	77BF-111-18	77BF-101-18	1FL + 13FH	1FL + 13FH	FL	2FL + 3FH	-	14 (CL1+CH1)	14 (CL1+CH1)	14 (CL1+CH1)	-	2 FL	7	GL1 = SL1-98	GH = SH-98	-	-	-	7	GL1 = SL1-88	GH = SH-88	-	-	-	14	CL1 = SL1-78	14	CH = SH-122	-	-	-	-	14	CL1 = SL1-78	14	CH = SH-106	-	-	-	-
			77BF-102-18				1FL + 3FH					1FL																												
			77BF-103-18				2FL + 4FH					-																												
	2B & 2C	77BF-111-18 + 77BF-401-18	77BF-101-18				1FL + 4FH					1FL																												
			77BF-102-18																																				
			77BF-103-18																																				

ACTIVE / AKTİF

90° **CORNER CUTTING SIZE LIST** / KÖŞE DÖNÜŞ KESİM ÖLÇÜ LİSTESİ

90° CUTTING SIZE / KESİM ÖLÇÜLERİ

OPENING TYPE AÇILIM TİPİ	SECTION TYPE DETAY TİPİ	VERTICAL PROFILE DÜŞEY PROFİL	BOTTOM DETAIL TYPE ALT DETAY TİPİ	INSIDE OPENING İÇE AÇILIR HORIZONTAL FRAME YATAY KASA 77BF-101-18		OUTSIDE OPENING DIŞA AÇILIR HORIZONTAL FRAME YATAY KASA 77BF-101-18		HORIZONTAL FRAME YATAY KASA 77BF-102-18		HORIZONTAL FRAME YATAY KASA 77BF-103-18		VERTICAL FRAME DÜŞEY KASA 77BF-111-18		ADJUSTING ADAPTER AYAR ADAPTÖRÜ 77BF-401-18		HORIZONTAL SASH 1 YATAY KANAT 1 77BF-201-18		HORIZONTAL SASH 2 YATAY KANAT 2 77BF-201-18		VERTICAL SASH DÜŞEY KANAT 77BF-201-18		INSIDE OPENING İÇE AÇILIR FRAME ADAPTER KASA ADAPTÖRÜ 77BF-402-00		OUTSIDE OPENING DIŞA AÇILIR FRAME ADAPTER KASA ADAPTÖRÜ 77BF-402-00		HORIZONTAL SASH ADAPTER 1 YATAY KANAT ADAPTÖRÜ 1 77BF-501-00 H1		HORIZONTAL SASH ADAPTER 2 YATAY KANAT ADAPTÖRÜ 2 77BF-501-00 H2		HORIZONTAL SASH ADAPTER 3 YATAY KANAT ADAPTÖRÜ 3 77BF-501-00 H3		VERTICAL SASH ADAPTER 1 DÜŞEY KANAT ADAPTÖRÜ 1 77BF-501-00 V1		VERTICAL SASH ADAPTER 2 DÜŞEY KANAT ADAPTÖRÜ 2 77BF-501-00 V2		ADAPTER 1 ADAPTÖR 1 77BF-502-00 1		ADAPTER 2 ADAPTÖR 2 77BF-502-00 / 2		ADAPTER 1 ADAPTÖR 1 77BF-503-00 1		ADAPTER 2 ADAPTÖR 2 77BF-503-00 2	
				QUANTITY ANGULAR MİKTAR / AÇI	FORMULA / FORMÜL	QUANTITY ANGULAR MİKTAR / AÇI	FORMULA / FORMÜL	QUANTITY ANGULAR MİKTAR / AÇI	FORMULA / FORMÜL	QUANTITY ANGULAR MİKTAR / AÇI	FORMULA / FORMÜL	QUANTITY ANGULAR MİKTAR / AÇI	FORMULA / FORMÜL	QUANTITY ANGULAR MİKTAR / AÇI	FORMULA / FORMÜL	QUANTITY ANGULAR MİKTAR / AÇI	FORMULA / FORMÜL	QUANTITY ANGULAR MİKTAR / AÇI	FORMULA / FORMÜL	QUANTITY ANGULAR MİKTAR / AÇI	FORMULA / FORMÜL	QUANTITY ANGULAR MİKTAR / AÇI	FORMULA / FORMÜL	QUANTITY ANGULAR MİKTAR / AÇI	FORMULA / FORMÜL	QUANTITY ANGULAR MİKTAR / AÇI	FORMULA / FORMÜL	QUANTITY ANGULAR MİKTAR / AÇI	FORMULA / FORMÜL	QUANTITY ANGULAR MİKTAR / AÇI	FORMULA / FORMÜL	QUANTITY ANGULAR MİKTAR / AÇI	FORMULA / FORMÜL	QUANTITY ANGULAR MİKTAR / AÇI	FORMULA / FORMÜL	QUANTITY ANGULAR MİKTAR / AÇI	FORMULA / FORMÜL	QUANTITY ANGULAR MİKTAR / AÇI	FORMULA / FORMÜL
7	2B & 2C	77BF-111-18	77BF-101-18	2 90°/45°	FL-12,5	2 90°/45°	FL-22					1 90°	FH			14 45°	SL1 = (FL-242)/7	-	-	14 45°	SH = FH-92	1 90°/45°	FL-82	1 90°/45°	FL-23	12 90°	SL1-12	-	-	2 90°/45°	SL1+8	1 90°/45°	SH+14	1 90°	SH-14	1 90°	SH-4	1 90°	SH+1
			77BF-102-18	1 90°/45°		1 90°/45°		1 90°/45°	FL-22												SH = FH-92	2 90°/45°	FL-82 FL-23	2 90°/45°	FL-82 FL-23																
			77BF-103-18	1 90°/45°		1 90°/45°				1 90°/45°	FL-10										SH = FH-77	1 90°	FL-108	1 90°	FL-49																
	2B & 2C	77BF-111-18 + 77BF-401-18	77BF-101-18	2 90°/45°	FL-12,5	2 90°/45°	FL-22															SH = FH-92	2 90°	FL-108 FL-49	2 90°	FL-108 FL-49																
			77BF-102-18	1 90°/45°		1 90°/45°		1 90°/45°	FL-22					1 90°	FH-54						SH = FH-92	2 90°	FL-108 FL-49	2 90°	FL-108 FL-49																
			77BF-103-18	1 90°/45°		1 90°/45°				1 90°/45°	FL-10				FH-27						SH = FH-77																				
															FH-39																										

45°
CUTTING SIZE
KESİM ÖLÇÜLERİ

45° **FORMULE DESCRIPTION** / FORMÜL AÇIKLAMALARI

INWARD OPENING / İÇE AÇILIR

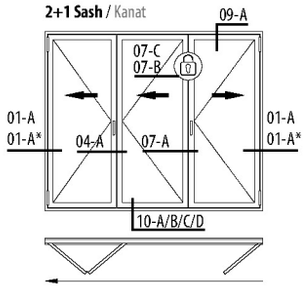

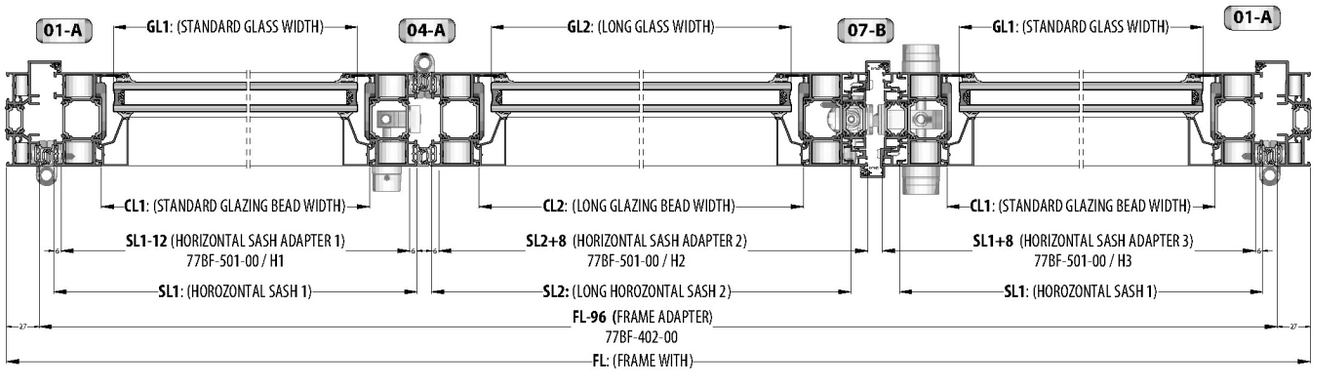

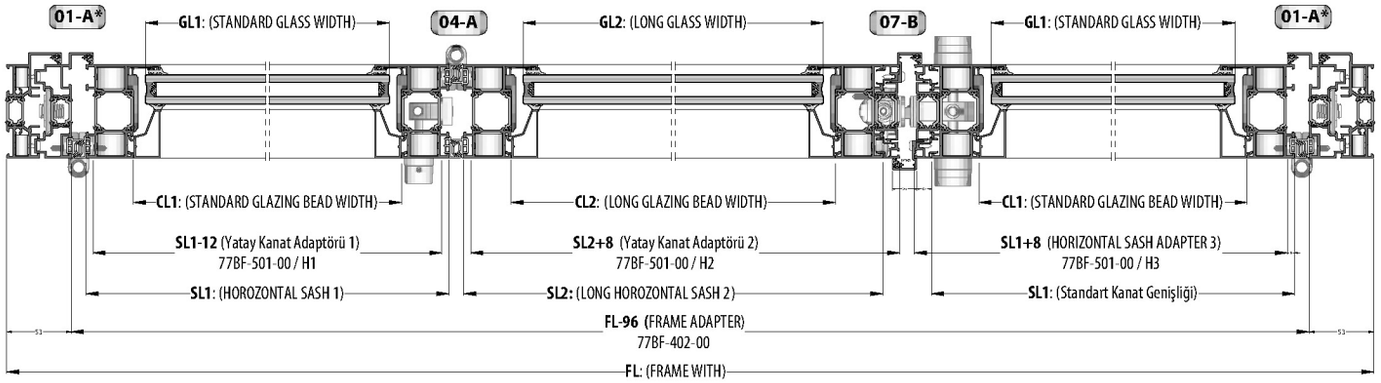

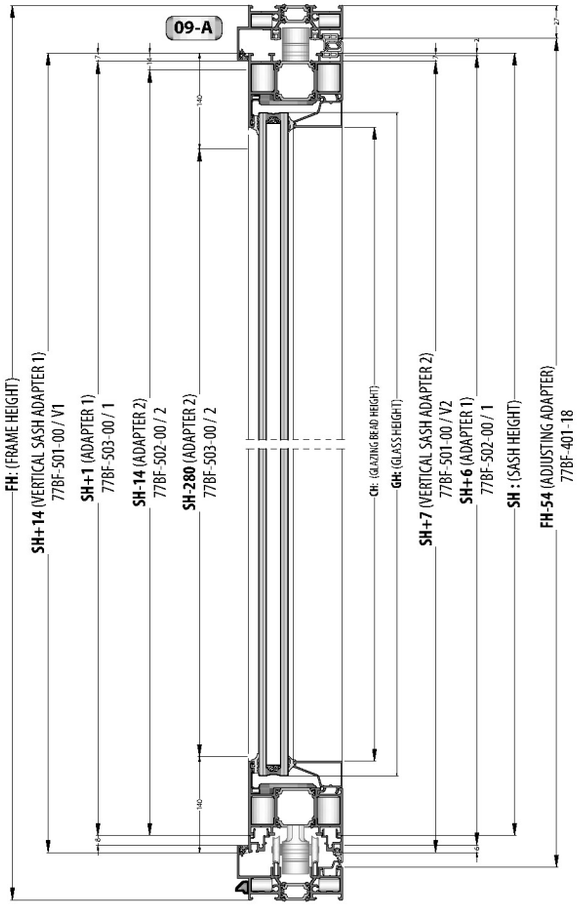

10-A **HORIZONTAL FRAME** / YATAY KASA **: 77BF-101-18**

45° **FORMULE DESCRIPTION** / FORMÜL AÇIKLAMALARI

OUTWARD OPENING / DIŞA AÇILIR

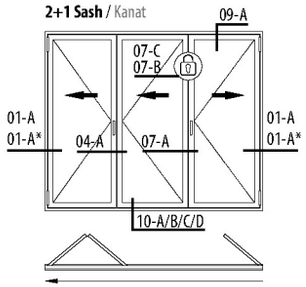

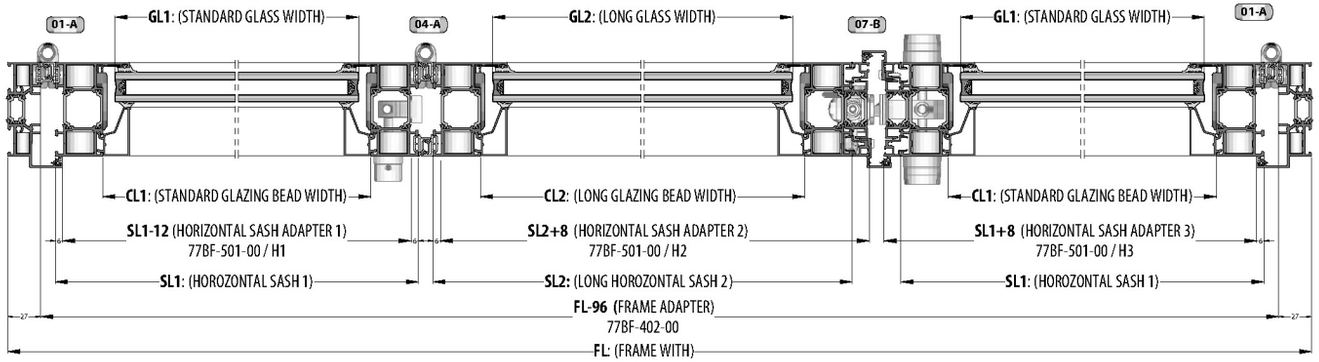

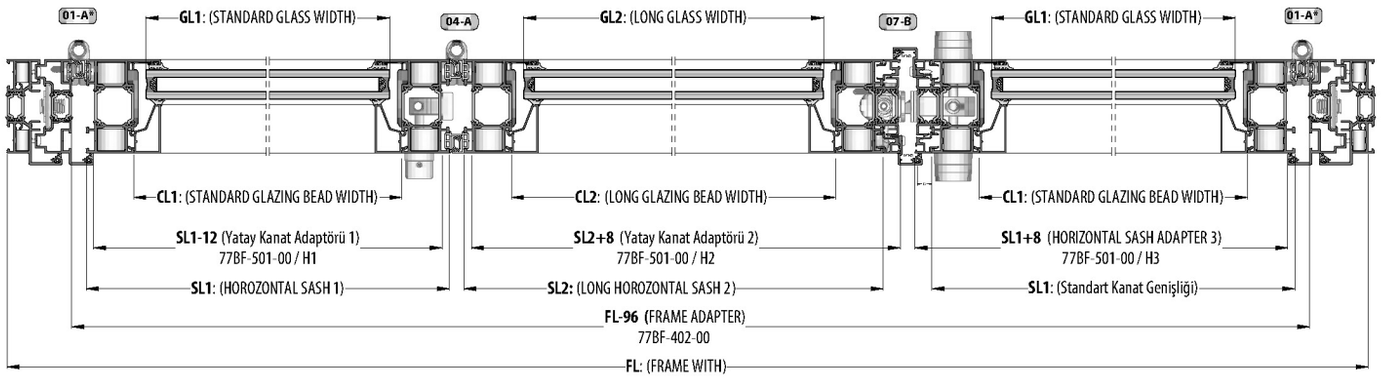

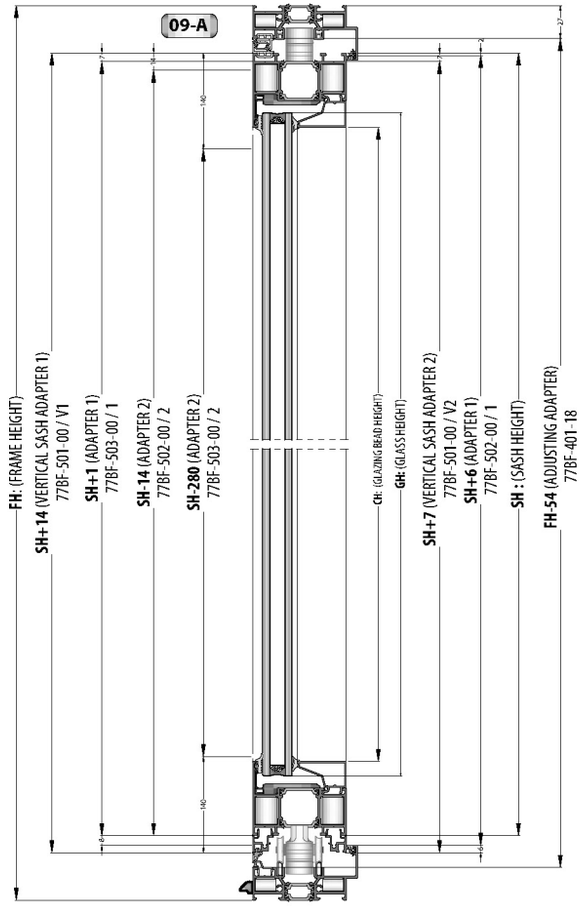

10-A **HORIZONTAL FRAME** / YATAY KASA **: 77BF-101-18**

45° CUTTING SIZE KESİM ÖLÇÜLERİ				GASKETS / FİTİLLER									GLASS / CAM 77BF-201-18				GLASS / CAM 77BF-202-18				GLAZING BEAD / CAM ÇITASI 77BF-201-18								GLAZING BEAD / CAM ÇITASI 77BF-201-18							
													GL1				GL2				GL1				GL2				CL1				CH			
OPENING TYPE AÇILIM TİPİ	SECTION TYPE DETAY TİPİ	VERTICAL PROFILE DÜŞEY PROFİL	BOTTOM DETAIL TYPE ALT DETAY TİPİ	EM77BF-01	EM77BF-02	EM77BF-03	EM3-03	EM3-01	EM2-03	EM1-XX	O.RING-3 mm	EM45-05	QUANTITY MİKTAR	FORMULA FORMÜL Horizontal / Yatay	FORMULA FORMÜL Vertical / Düşey		QUANTITY MİKTAR	FORMULA FORMÜL Horizontal / Yatay	FORMULA FORMÜL Vertical / Düşey		QUANTITY MİKTAR	FORMULA FORMÜL Horizontal / Yatay	FORMULA FORMÜL Vertical / Düşey		QUANTITY MİKTAR	FORMULA FORMÜL Horizontal / Yatay	FORMULA FORMÜL Vertical / Düşey		QUANTITY MİKTAR	FORMULA FORMÜL Horizontal / Yatay	FORMULA FORMÜL Vertical / Düşey		QUANTITY MİKTAR	FORMULA FORMÜL Horizontal / Yatay	FORMULA FORMÜL Vertical / Düşey	
2 + 0	3A	77BF-101-18 77BF-101-18 + 77BF-401-18	77BF-101-18	1FL + 3FH	1FL + 3FH	FL	2FL+2FH	FH	2 (CL1+CH1) + 2 (CL2 +CH2)	2 (CL1+CH1) + 2 (CL2 +CH2)	2 (CL1+CH1) + 2 (CL2 +CH2)	2FL+4FH	1	GL1 = SL1-98	GH = SH-98		1	GL2 = SL2-98	GH = SH-98		1	GL1 = SL1-88	GH = SH-88		1	GL2 = SL2-88	GH = SH-88		2	CL1 = SL1-78			2	CH = SH-122			2	CL2 = SL2-78			2	CH = SH-122			2	CL1 = SL1-78			2	CH = SH-106			2	CL2 = SL2-78			2	CH = SH-106		
2 + 1	7A	77BF-101-18	77BF-101-18	1FL + 4FH	1FL + 4FH	FL	2FL + 4FH	-	4 (CL1+CH1) + 2 (CL2 +CH2)	4 (CL1+CH1) + 2 (CL2 +CH2)	4 (CL1+CH1) + 2 (CL2+CH2)	2FL+4FH	2	GL1 = SL1-98	GH = SH-98		1	GL2 = SL2-98	GH = SH-98		2	GL1 = SL1-88	GH = SH-88		1	GL2 = SL2-88	GH = SH-88		4	CL1 = SL1-78			4	CH = SH-122			2	CL2 = SL2-78			2	CH = SH-122			4	CL1 = SL1-78			4	CH = SH-106			2	CL2 = SL2-78			2	CH = SH-106		
	7B & 7C						2FL + 4FH																																																
	7A*	77BF-101-18 + 77BF-401-18					2FL + 6FH																																																
	7B & 7C						2FL + 6FH																																																
3 + 0	2A	77BF-101-18	77BF-101-18	1FL + 5FH	1FL + 5FH	FL	2FL + 3FH	-	6 (CL1+CH1)	6 (CL1+CH1)	6 (CL1+CH1)	2 FL+4FH	3	GL1 = SL1-98	GH = SH-98		-	-	-		3	GL1 = SL1-88	GH = SH-88		-	-	-		6	CL1 = SL1-78			6	CH = SH-122			-	-			-	-			6	CL1 = SL1-78			6	CH = SH-106			-	-			-	-		
	2B & 2C						2FL + 3FH																																															
	2A*	77BF-101-18 + 77BF-401-18					2FL + 5FH																																															
	2B & 2C						2FL + 5FH																																															
2 + 2	8A	77BF-101-18 77BF-101-18 + 77BF-401-18	77BF-101-18	1FL + 6FH	1FL + 6FH	FL	2FL + 3FH	FH	4 (CL1+CH1) + 4 (CL2 +CH2)	4 (CL1+CH1) + 4 (CL2 +CH2)	4 (CL1+CH1) + 4 (CL2 +CH2)	2 FL+4FH	2	GL1 = SL1-98	GH = SH-98		2	GL2 = SL2-98	GH = SH-98		2	GL1 = SL1-88	GH = SH-88		2	GL2 = SL2-88	GH = SH-88		4	CL1 = SL1-78			4	CH = SH-122			4	CL2 = SL2-78			4	CH = SH-122			4	CL1 = SL1-78			4	CH = SH-106			4	CL2 = SL2-78			4	CH = SH-106		
							2FL + 5FH																																															
3 + 1	6A	77BF-101-18	77BF-101-18	1FL + 6FH	1FL + 6FH	FL	2FL+4FH	-	8 (CL1+CH1)	8 (CL1+CH1)	8 (CL1+CH1)	2 FL+4FH	4	GL1 = SL1-98	GH = SH-98		-	-	-		4	GL1 = SL1-88	GH = SH-88		-	-	-		8	CL1 = SL1-78			8	CH = SH-122			-	-			-	-			8	CL1 = SL1-78			8	CH = SH-106			-	-			-	-		
	6B & 6C						2FL+4FH																																															
	6A*	77BF-101-18 + 77BF-401-18					2FL+6FH																																															
	6B & 6C						2FL+6FH																																															

45° CUTTING SIZE LIST / KESİM ÖLÇÜ LİSTESİ

45° CUTTING SIZE KESİM ÖLÇÜLERİ				HORIZONTAL FRAME YATAY KASA 77BF-101-18		VERTICAL FRAME DÜŞEY KASA 77BF-101-18		ADJUSTING ADAPTER AYAR ADAPTÖRÜ 77BF-401-18		HORIZONTAL SASH 1 YATAY KANAT 1 77BF-201-18		HORIZONTAL SASH 2 YATAY KANAT 2 77BF-201-18		VERTICAL SASH DÜŞEY KANAT 77BF-201-18		FRAME ADAPTER KASA ADAPTÖRÜ 77BF-402-00		HORIZONTAL SASH ADAPTER 1 YATAY KANAT ADAPTÖRÜ 1 77BF-501-00 / H1		HORIZONTAL SASH ADAPTER 2 YATAY KANAT ADAPTÖRÜ 2 77BF-501-00 / H2		HORIZONTAL SASH ADAPTER 3 YATAY KANAT ADAPTÖRÜ 3 77BF-501-00 / H3		VERTICAL SASH ADAPTER 1 DÜŞEY KANAT ADAPTÖRÜ 1 77BF-501-00 / V1		VERTICAL SASH ADAPTER 2 DÜŞEY KANAT ADAPTÖRÜ 2 77BF-501-00 / V2		ADAPTER 1 ADAPTÖR 1 77BF-502-00 / 1		ADAPTER 2 ADAPTÖR 2 77BF-502-00 / 2		ADAPTER 1 ADAPTÖR 1 77BF-503-00 / 1		ADAPTER 2 ADAPTÖR 2 77BF-503-00 / 2	
OPENING TYPE AÇILIM TİPİ	SECTION TYPE DETAY TİPİ	VERTICAL PROFILE DÜŞEY PROFİL	BOTTOM DETAIL TYPE ALT DETAY TİPİ	QUANTITY ANGULAR MİKTAR / AÇI	FORMULA / FORMÜL	QUANTITY ANGULAR MİKTAR / AÇI	FORMULA / FORMÜL	QUANTITY ANGULAR MİKTAR / AÇI	FORMULA / FORMÜL	QUANTITY ANGULAR MİKTAR / AÇI	FORMULA / FORMÜL	QUANTITY ANGULAR MİKTAR / AÇI	FORMULA / FORMÜL	QUANTITY ANGULAR MİKTAR / AÇI	FORMULA / FORMÜL	QUANTITY ANGULAR MİKTAR / AÇI	FORMULA / FORMÜL	QUANTITY ANGULAR MİKTAR / AÇI	FORMULA / FORMÜL	QUANTITY ANGULAR MİKTAR / AÇI	FORMULA / FORMÜL	QUANTITY ANGULAR MİKTAR / AÇI	FORMULA / FORMÜL	QUANTITY ANGULAR MİKTAR / AÇI	FORMULA / FORMÜL	QUANTITY ANGULAR MİKTAR / AÇI	FORMULA / FORMÜL	QUANTITY ANGULAR MİKTAR / AÇI	FORMULA / FORMÜL	QUANTITY ANGULAR MİKTAR / AÇI	FORMULA / FORMÜL	QUANTITY ANGULAR MİKTAR / AÇI	FORMULA / FORMÜL
2 + 0	3A	77BF-101-18	77BF-101-18	2 45°	FL	2 45°	FH			2 45°	SL1 = ((FL-104)/2)-23	2 45°	SL2=SL1+51	4 45°	SH = FH-92	1 90°	FL-54	2 90°	SL1-12	2 90°/45°	SL2+8	-	-	1 90° / 45°	SH+14	1 90° / 45°	SH+7	1 90°	SH+6	-	-	-	-	-	-
		77BF-101-18 + 77BF-401-18						2 90°	FH-54		SL1 = ((FL-156)/2)-23					1 90°	FL-106																		
2 + 1	7A	77BF-101-18	77BF-101-18	2 45°	FL	2 45°	FH			4 45°	SL1 = ((FL-116)/3)-15,3	2 45°	SL2=SL1+51	6 45°	SH = FH-92	1 90°	FL-54	4 90°	SL1-12	2 90°/45°	SL2+8	-	-	1 90° / 45°	SH+14	1 90° / 45°	SH+7	1 90°	SH+6	1 90°	SH-14	-	-	-	-
	7B & 7C										SL1 = ((FL-130)/3)-15,3							2 90°				2 90° / 45°	SL1+8	2 90° / 45°		2 90° / 45°						1 90°	SH+1	1 90°	SH-280
	7A*	77BF-101-18 + 77BF-401-18						2 90°	FH-54		SL1 = ((FL-168)/3)-15,3					1 90°	FL-106					-	-	1 90° / 45°		1 90° / 45°				-	-	-	-
	7B & 7C										SL1 = ((FL-182)/3)-15,3							2 90°				2 90° / 45°	SL1+8	2 90° / 45°		2 90° / 45°				1 90°	SH+1	1 90°	SH-280
3 + 0	2A	77BF-101-18	77BF-101-18	2 45°	FL	2 45°	FH			6 45°	SL1 = (FL-102)/3	-	-	6 45°	SH = FH-92	1 90°	FL-54	6 90°	SL1-12	-	-	-	-	-	-	-	-	-	-			-	-	-	-
	2B & 2C										SL1 = (FL-116)/3							4 90°				2 90° / 45°	SL1+8	1 90° / 45°	SH+14	1 90° / 45°	SH+7	1 90°	SH+6			1 90°	SH+1	-	-
	2A*	77BF-101-18 + 77BF-401-18						2 90°	FH-54		SL1 = (FL-154)/3					1 90°	FL-106	6 90°		-	-	-	-	-	-	-	-					-	-	-	-
	2B & 2C										SL1 = (FL-168)/3							4 90°				2 90° / 45°	SL1+8	1 90° / 45°	SH+14	1 90° / 45°	SH+7					1 90°	SH+1	-	-
2 + 2	8A	77BF-101-18	77BF-101-18	2 45°	FL	2 45°	FH			4 45°	SL1 = ((FL-142)/4)-23	4 45°	SL2=SL1+51	8 45°	SH = FH-92	1 90°	FL-54	4 90°	SL1-12	4 90°/45°	SL2+8	-	-	2 90° / 45°	SH+14	2 90° / 45°	SH+7	1 90°	SH+6	1 90°	SH-14	-	-	-	-
		77BF-101-18 + 77BF-401-18						2 90°	FH-54		SL1 = ((FL-194)/4)-23					1 90°	FL-106																		
3 + 1	6A	77BF-101-18	77BF-101-18	2 45°	FL	2 45°	FH			8 45°	SL1 = (FL-114)/4	-	-	8 45°	SH = FH-92	1 90°	FL-54	8 90°	SL1-12	-	-	-	-	-	-	-	-	-	-	1 90°	SH+6	1 90°	SH-14	-	-
	6B & 6C										SL1 = (FL-142)/4							4 90°				4 90° / 45°	SL1+8	2 90° / 45°	SH+14	2 90° / 45°	SH+7					2 90°	SH+1		
	6A*	77BF-101-18 + 77BF-401-18						2 90°	FH-54		SL1 = (FL-166)/4					1 90°	FL-106	8 90°		-	-	-	-	-	-	-	-					-	-		
	6B & 6C										SL1 = (FL-194)/4							4 90°				4 90° / 45°	SL1+8	2 90° / 45°	SH+14	2 90° / 45°	SH+7					2 90°	SH+1		

45° **CUTTING SIZE LIST** / KESİM ÖLÇÜ LİSTESİ

45° CUTTING SIZE KESİM ÖLÇÜLERİ				GASKETS / FİTİLLER									GLASS / CAM 77BF-201-18				GLASS / CAM 77BF-202-18				GLAZING BEAD / CAM ÇITASI 77BF-201-18								GLAZING BEAD / CAM ÇITASI 77BF-201-18							
OPENING TYPE AÇILIM TİPİ	SECTION TYPE DETAY TİPİ	VERTICAL PROFILE DÜŞEY PROFİL	BOTTOM DETAIL TYPE ALT DETAY TİPİ	EM77BF-01	EM77BF-02	EM77BF-03	EM3-03	EM3-01	EM2-03	EM1-XX	O.RING-3 mm	EM45-05	GL1			GL2			GL1			GL2			CL1		CH		CL2		CH		CL1		CH		CL2		CH	
													QUANTITY MİKTAR	FORMULA FORMÜL Horizontal / Yatay	FORMULA FORMÜL Vertical / Düşey	QUANTITY MİKTAR	FORMULA FORMÜL Horizontal / Yatay	FORMULA FORMÜL Vertical / Düşey	QUANTITY MİKTAR	FORMULA FORMÜL Horizontal / Yatay	FORMULA FORMÜL Vertical / Düşey	QUANTITY MİKTAR	FORMULA FORMÜL Horizontal / Yatay	FORMULA FORMÜL Vertical / Düşey	QUANTITY MİKTAR	FORMULA FORMÜL Horizontal / Yatay	QUANTITY MİKTAR	FORMULA FORMÜL Vertical / Düşey	QUANTITY MİKTAR	FORMULA FORMÜL Horizontal / Yatay	QUANTITY MİKTAR	FORMULA FORMÜL Vertical / Düşey	QUANTITY MİKTAR	FORMULA FORMÜL Horizontal / Yatay	QUANTITY MİKTAR	FORMULA FORMÜL Horizontal / Yatay	QUANTITY MİKTAR	FORMULA FORMÜL Vertical / Düşey	QUANTITY MİKTAR	FORMULA FORMÜL Horizontal / Yatay	QUANTITY MİKTAR	FORMULA FORMÜL Vertical / Düşey
4 + 0	3A	77BF-101-18	77BF-101-18	1FL + 7FH	1FL + 7FH	FL	2FL + 2FH	FH	6 (CL1+CH1) + 2 (CL2 +CH2)	6 (CL1+CH1) + 2 (CL2 +CH2)	6 (CL1+CH1) + 2 (CL2 +CH2)	2 FL+4FH	3	GL1 = SL1-98	GH = SH-98	1	GL2 = SL2-98	GH = SH-98	3	GL1 = SL1-88	GH = SH-88	1	GL2 = SL2-88	GH = SH-88	6	CL1 = SL1-78	6	CH = SH-122	2	CL2 = SL2-78	2	CH = SH-122	6	CL1 = SL1-78	6	CH = SH-106	2	CL2 = SL2-78	2	CH = SH-106
							2FL + 4FH																																	
		77BF-101-18 + 77BF-401-18																																						
3 + 2	7A	77BF-101-18	77BF-101-18	1FL + 8FH	1FL + 8FH	FL	2FL + 4FH	-	8 (CL1+CH1) + 2 (CL2 +CH2)	8 (CL1+CH1) + 2 (CL2 +CH2)	8 (CL1+CH1) + 2 (CL2 +CH2)	2 FL+4FH	4	GL1 = SL1-98	GH = SH-98	1	GL2 = SL2-98	GH = SH-98	4	GL1 = SL1-88	GH = SH-88	1	GL2 = SL2-88	GH = SH-88	8	CL1 = SL1-78	8	CH = SH-122	2	CL2 = SL2-78	2	CH = SH-122	8	CL1 = SL1-78	8	CH = SH-106	2	CL2 = SL2-78	2	CH = SH-106
	7B & 7C	77BF-101-18					2FL + 4FH																																	
	7A*	77BF-101-18 + 77BF-401-18					2FL + 6FH																																	
	7B & 7C	77BF-101-18 + 77BF-401-18					2FL + 6FH																																	
4 + 1	7A	77BF-101-18	77BF-101-18	1FL + 8FH	1FL + 8FH	FL	2FL +4FH	-	8 (CL1+CH1) + 2 (CL2 +CH2)	8 (CL1+CH1) + 2 (CL2 +CH2)	8 (CL1+CH1) + 2 (CL2 +CH2)	2 FL+4FH	4	GL1 = SL1-98	GH = SH-98	1	GL2 = SL2-98	GH = SH-98	4	GL1 = SL1-88	GH = SH-88	1	GL2 = SL2-88	GH = SH-88	8	CL1 = SL1-78	8	CH = SH-122	2	CL2 = SL2-78	2	CH = SH-122	8	CL1 = SL1-78	8	CH = SH-106	2	CL2 = SL2-78	2	CH = SH-106
	7B & 7C	77BF-101-18					2FL +4FH																																	
	7A*	77BF-101-18 + 77BF-401-18					2FL +6FH																																	
	7B & 7C	77BF-101-18 + 77BF-401-18					2FL +6FH																																	
5 + 0	2A	77BF-101-18	77BF-101-18	1FL + 9FH	1FL + 9FH	FL	2FL +3FH	-	10 (CL1+CH1)	10 (CL1+CH1)	10 (CL1+CH1)	2 FL+4FH	5	GL1 = SL1-98	GH = SH-98	-	-	-	5	GL1 = SL1-88	GH = SH-88	-	-	-	10	CL1 = SL1-78	10	CH = SH-122	-	-	-	-	10	CL1 = SL1-78	10	CH = SH-106	-	-	-	-
	2B & 2C	77BF-101-18					2FL +3FH																																	
	2A*	77BF-101-18 + 77BF-401-18					2FL +5FH																																	
	2B & 2C	77BF-101-18 + 77BF-401-18					2FL +5FH																																	
3 + 3	6A	77BF-101-18	77BF-101-18	1FL + 10FH	1FL + 10FH	FL	2FL +4FH	-	12 (CL1+CH1)	12 (CL1+CH1)	12 (CL1+CH1)	2 FL+4FH	6	GL1 = SL1-98	GH = SH-98	-	-	-	6	GL1 = SL1-88	GH = SH-88	-	-	-	12	CL1 = SL1-78	12	CH = SH-122	-	-	-	-	12	CL1 = SL1-78	12	CH = SH-106	-	-	-	-
	6B & 6C	77BF-101-18					2FL +4FH																																	
	6A*	77BF-101-18 + 77BF-401-18					2FL +6FH																																	
	6B & 6C	77BF-101-18 + 77BF-401-18					2FL +6FH																																	

45° CUTTING SIZE LIST / KESİM ÖLÇÜ LİSTESİ

45° CUTTING SIZE KESİM ÖLÇÜLERİ				HORIZONTAL FRAME YATAY KASA 77BF-101-18		VERTICAL FRAME DÜŞEY KASA 77BF-101-18		ADJUSTING ADAPTER AYAR ADAPTÖRÜ 77BF-401-18		HORIZONTAL SASH 1 YATAY KANAT 1 77BF-201-18		HORIZONTAL SASH 2 YATAY KANAT 2 77BF-201-18		VERTICAL SASH DÜŞEY KANAT 77BF-201-18		FRAME ADAPTER KASA ADAPTÖRÜ 77BF-402-00		HORIZONTAL SASH ADAPTER 1 YATAY KANAT ADAPTÖRÜ 1 77BF-501-00 / H1		HORIZONTAL SASH ADAPTER 2 YATAY KANAT ADAPTÖRÜ 2 77BF-501-00 H2		HORIZONTAL SASH ADAPTER 3 YATAY KANAT ADAPTÖRÜ 3 77BF-501-00 / H3		VERTICAL SASH ADAPTER 1 DÜŞEY KANAT ADAPTÖRÜ 1 77BF-501-00 / V1		VERTICAL SASH ADAPTER 2 DÜŞEY KANAT ADAPTÖRÜ 2 77BF-501-00 / V2		ADAPTER 1 ADAPTÖR 1 77BF-502-00 / 1		ADAPTER 2 ADAPTÖR 2 77BF-502-00 / 2		ADAPTER 1 ADAPTÖR 1 77BF-503-00 / 1		ADAPTER 2 ADAPTÖR 2 77BF-503-00 / 2	
OPENING TYPE AÇILIM TİPİ	SECTION TYPE DETAY TİPİ	VERTICAL PROFILE DÜŞEY PROFİL	BOTTOM DETAIL TYPE ALT DETAY TİPİ	QUANTITY ANGULAR MİKTAR / AÇI	FORMULA / FORMÜL	QUANTITY ANGULAR MİKTAR / AÇI	FORMULA / FORMÜL	QUANTITY ANGULAR MİKTAR / AÇI	FORMULA / FORMÜL	QUANTITY ANGULAR MİKTAR / AÇI	FORMULA / FORMÜL	QUANTITY ANGULAR MİKTAR / AÇI	FORMULA / FORMÜL	QUANTITY ANGULAR MİKTAR / AÇI	FORMULA / FORMÜL	QUANTITY ANGULAR MİKTAR / AÇI		QUANTITY ANGULAR MİKTAR / AÇI	FORMULA / FORMÜL	QUANTITY ANGULAR MİKTAR / AÇI	FORMULA / FORMÜL	QUANTITY ANGULAR MİKTAR / AÇI	FORMULA / FORMÜL	QUANTITY ANGULAR MİKTAR / AÇI	FORMULA / FORMÜL	QUANTITY ANGULAR MİKTAR / AÇI	FORMULA / FORMÜL	QUANTITY ANGULAR MİKTAR / AÇI	FORMULA / FORMÜL	QUANTITY ANGULAR MİKTAR / AÇI	FORMULA / FORMÜL	QUANTITY ANGULAR MİKTAR / AÇI	FORMULA / FORMÜL
4 + 0	3A	77BF-101-18	77BF-101-18	2 45°	FL	2 45°	FH			6 45°	SL1 = ((FL-128)/4)-11,5	2 45°	SL2=SL1+51	8 45°	SH = FH-92	1 90°	FL-54	6 90°	SL1-12	2 90°/45°	SL2+8	-	-	1 90° / 45°	SH+14	1 90° / 45°	SH+7	1 90°	SH+6	-	-	-	-	-	-
		77BF-101-18 + 77BF-401-18						2 90°	FH-54		SL1 = ((FL-180)/4)-11,5					1 90°	FL-106																		
3 + 2	7A	77BF-101-18	77BF-101-18	2 45°	FL	2 45°	FH			8 45°	SL1 = ((FL-140)/5)-9,2	2 45°	SL2=SL1+51	10 45°	SH = FH-92	1 90°	FL-54	8 90°	SL1-12	2 90°/45°	SL2+8	-	-	1 90° / 45°	SH+14	1 90° / 45°	SH+7	1 90°	SH+6	1 90°	SH-14	-	-	-	-
	7B & 7C	77BF-101-18									SL1 = ((FL-154)/5)-9,2							6 90°				2 90° / 45°	SL1+8	2 90° / 45°		2 90° / 45°						1 90°	SH+1	1 90°	SH-280
	7A*	77BF-101-18 + 77BF-401-18						2 90°	SH-54		SL1 = ((FL-192)/5)-9,2					1 90°	FL-106	8 90°				-	-	1 90° / 45°		1 90° / 45°						-	-	-	-
	7B & 7C	77BF-101-18 + 77BF-401-18									SL1 = ((FL-206)/5)-9,2							6 90°				2 90° / 45°	SL1+8	2 90° / 45°		2 90° / 45°						1 90°	SH+1	1 90°	SH-280
4 + 1	7A	77BF-101-18	77BF-101-18	2 45°	FL	2 45°	FH			8 45°	SL1 = ((FL-140)/5)-9,2	2 45°	SL2=SL1+51	10 45°	SH = FH-92	1 90°	FL-54	8 90°	SL1-12	2 90°/45°	SL2+8	-	-	1 90° / 45°	SH+14	1 90° / 45°	SH+7	1 90°	SH+6	1 90°	SH-14	-	-	-	-
	7B & 7C	77BF-101-18									SL1 = ((FL-154)/5)-9,2							6 90°				2 90° / 45°	SL1+8	2 90° / 45°		2 90° / 45°						1 90°	SH+1	1 90°	SH-280
	7A*	77BF-101-18 + 77BF-401-18						2 90°	FH-54		SL1 = ((FL-192)/5)-9,2					1 90°	FL-106	8 90°				-	-	1 90° / 45°		1 90° / 45°						-	-	-	-
	7B & 7C	77BF-101-18 + 77BF-401-18									SL1 = ((FL-206)/5)-9,2							6 90°				2 90° / 45°	SL1+8	2 90° / 45°		2 90° / 45°						1 90°	SH+1	1 90°	SH-280
5 + 0	2A	77BF-101-18	77BF-101-18	2 45°	FL	2 45°	FH			10 45°	SL1 = (FL-126)/5	-	-	10 45°	SH = FH-92	1 90°	FL-54	10 90°	SL1-12	-	-	-	-	-	-	-	-	1 90°	SH+6	-	-	-	-	-	-
	2B & 2C	77BF-101-18									SL1 = (FL-140)/5							8 90°	SL1-12			2 90° / 45°	SL1+8	1 90° / 45°	SH+14	1 90° / 45°	SH+7					1 90°	SH+1	-	-
	2A*	77BF-101-18 + 77BF-401-18						2 90°	FH-54		SL1 = (FL-178)/5					1 90°	FL-106	10 90°	SL1-12			-	-	-	-	-	-					-	-	-	-
	2B & 2C	77BF-101-18 + 77BF-401-18									SL1 = (FL-192)/5							8 90°	SL1-12			2 90° / 45°	SL1+8	1 90° / 45°	SH+14	1 90° / 45°	SH+7					1 90°	SH+1	-	-
3 + 3	6A	77BF-101-18	77BF-101-18	2 45°	FL	2 45°	FH			12 45°	SL1 = (FL-138)/6	-	-	12 45°	SH = FH-92	1 90°	FL-54	12 90°	SL1-12	-	-	-	-	-	-	-	-	1 90°	SH+6	1 90°	SH-14	-	-	-	-
	6B & 6C	77BF-101-18									SL1 = (FL-166)/6							8 90°				4 90° / 45°	SL1+8	2 90° / 45°	SH+14	2 90° / 45°	SH+7					2 90°	SH+1		
	6A*	77BF-101-18 + 77BF-401-18						2 90°	FH-54		SL1 = (FL-190)/6					1 90°	FL-106	12 90°				-	-	-	-	-	-					-	-		
	6B & 6C	77BF-101-18 + 77BF-401-18									SL1 = (FL-218)/6							8 90°				4 90° / 45°	SL1+8	2 90° / 45°	SH+14	2 90° / 45°	SH+7					2 90°	SH+1		

45° **CUTTING SIZE LIST** / KESİM ÖLÇÜ LİSTESİ

45° CUTTING SIZE KESİM ÖLÇÜLERİ				GASKETS / FİTİLLER									GLASS / CAM 77BF-201-18				GLASS / CAM 77BF-202-18				GLAZING BEAD / CAM ÇITASI 77BF-201-18								GLAZING BEAD / CAM ÇITASI 77BF-201-18							
OPENING TYPE AÇILIM TİPİ	SECTION TYPE DETAY TİPİ	VERTICAL PROFILE DÜŞEY PROFİL	BOTTOM DETAIL TYPE ALT DETAY TİPİ	EM77BF-01	EM77BF-02	EM77BF-03	EM3-03	EM3-01	EM2-03	EM1-XX	O.RING-3 mm	EM45-05	GL1			GL2			GL1		GL2			CL1		CH		CL2		CH		CL1		CH		CL2		CH	
													QUANTITY MİKTAR	FORMULA FORMÜL	Horizontal / Yatay	QUANTITY MİKTAR	FORMULA FORMÜL	Vertical / Düşey	QUANTITY MİKTAR	FORMULA FORMÜL	QUANTITY MİKTAR	FORMULA FORMÜL	Horizontal / Yatay	QUANTITY MİKTAR	FORMULA FORMÜL	Vertical / Düşey	QUANTITY MİKTAR	FORMULA FORMÜL	Horizontal / Yatay	QUANTITY MİKTAR	FORMULA FORMÜL	Vertical / Düşey	QUANTITY MİKTAR	FORMULA FORMÜL	Horizontal / Yatay	QUANTITY MİKTAR	FORMULA FORMÜL	Vertical / Düşey
4 + 2	8A	77BF-101-18	77BF-101-18	1FL + 10FH	1FL + 10FH	FL	2FL + 3FH	FH	8 (CL1+CH1) + 4 (CL2 +CH2)	8 (CL1+CH1) + 4 (CL2 +CH2)	8 (CL1+CH1) + 4 (CL2 +CH2)	2 FL+ 4FH	4	GL1 = SL1-98	GH = SH-98	2	GL2 = SL2-98	GH = SH-98	4	GL1 = SL1-88	GH = SH-88	2	GL2 = SL2-88	GH = SH-88	8	CL1 = SL1-78	8	CH = SH-122	4	CL2 = SL2-78	4	CH = SH-122	8	CL1 = SL1-78	8	CH = SH-106	4	CL2 = SL2-78	4	CH = SH-106
		77BF-101-18 + 77BF-401-18					2FL+ 5FH																															
5 + 1	6A	77BF-101-18	77BF-101-18	1FL + 10FH	1FL + 10FH	FL	2FL +4FH	-	12 (CL1+CH1)	12 (CL1+CH1)	12 (CL1+CH1)	2 FL+ 4FH	6	GL1 = SL1-98	GH = SH-98	-	-	-	6	GL1 = SL1-88	GH = SH-88	-	-	-	12	CL1 = SL1-78	12	CH = SH-122	-	-	-	-	12	CL1 = SL1-78	12	CH = SH-106	-	-	-	-
	6B & 6C	77BF-101-18					2FL +4FH																															
	6A*	77BF-101-18 + 77BF-401-18					2FL +6FH																															
	6B & 6C	77BF-101-18 + 77BF-401-18					2FL +6FH																															
6 + 0	3A	77BF-101-18	77BF-101-18	1FL + 11FH	1FL + 11FH	FL	2FL + 2FH	FH	10 (CL1+CH1) + 2 (CL2 +CH2)	10 (CL1+CH1) + 2 (CL2 +CH2)	10 (CL1+CH1) + 2 (CL2 +CH2)	2 FL+ 4FH	5	GL1 = SL1-98	GH = SH-98	1	GL2 = SL2-98	GH = SH-98	5	GL1 = SL1-88	GH = SH-88	1	GL2 = SL2-88	GH = SH-88	10	CL1 = SL1-78	10	CH = SH-122	2	CL2 = SL2-78	2	CH = SH-122	10	CL1 = SL1-78	10	CH = SH-106	2	CL2 = SL2-78	2	CH = SH-106
		77BF-101-18 + 77BF-401-18					2FL+ 4FH																															
4 + 3	7A	77BF-101-18	77BF-101-18	1FL + 12FH	1FL + 12FH	FL	2FL +4FH	-	12 (CL1+CH1) + 2 (CL2 +CH2)	12 (CL1+CH1) + 2 (CL2 +CH2)	12 (CL1+CH1) + 2 (CL2 +CH2)	2 FL+ 4FH	6	GL1 = SL1-98	GH = SH-98	1	GL2 = SL2-98	GH = SH-98	6	GL1 = SL1-88	GH = SH-88	1	GL2 = SL2-88	GH = SH-88	12	CL1 = SL1-78	12	CH = SH-122	2	CL2 = SL2-78	2	CH = SH-122	12	CL1 = SL1-78	12	CH = SH-106	2	CL2 = SL2-78	2	CH = SH-106
	7B & 7C	77BF-101-18					2FL +4FH																															
	7A*	77BF-101-18 + 77BF-401-18					2FL +6FH																															
	7B & 7C	77BF-101-18 + 77BF-401-18					2FL +6FH																															
5 + 2	7A	77BF-101-18	77BF-101-18	1FL + 12FH	1FL + 12FH	FL	2FL +4FH	-	12 (CL1+CH1) + 2 (CL2 +CH2)	12 (CL1+CH1) + 2 (CL2 +CH2)	12 (CL1+CH1) + 2 (CL2 +CH2)	2 FL+ 4FH	6	GL1 = SL1-98	GH = SH-98	1	GL2 = SL2-98	GH = SH-98	6	GL1 = SL1-88	GH = SH-88	1	GL2 = SL2-88	GH = SH-88	12	CL1 = SL1-78	12	CH = SH-122	2	CL2 = SL2-78	2	CH = SH-122	12	CL1 = SL1-78	12	CH = SH-106	2	CL2 = SL2-78	2	CH = SH-106
	7B & 7C	77BF-101-18					2FL +4FH																															
	7A*	77BF-101-18 + 77BF-401-18					2FL +6FH																															
	7B & 7C	77BF-101-18 + 77BF-401-18					2FL +6FH																															

45° CUTTING SIZE LIST / KESİM ÖLÇÜ LİSTESİ

45° CUTTING SIZE KESİM ÖLÇÜLERİ				HORIZONTAL FRAME YATAY KASA 77BF-101-18		VERTICAL FRAME DÜŞEY KASA 77BF-101-18		ADJUSTING ADAPTER AYAR ADAPTÖRÜ 77BF-401-18		HORIZONTAL SASH 1 YATAY KANAT 1 77BF-201-18		HORIZONTAL SASH 2 YATAY KANAT 2 77BF-201-18		VERTICAL SASH DÜŞEY KANAT 77BF-201-18		FRAME ADAPTER KASA ADAPTÖRÜ 77BF-402-00		HORIZONTAL SASH ADAPTER 1 YATAY KANAT ADAPTÖRÜ 1 77BF-501-00 / H1		HORIZONTAL SASH ADAPTER 2 YATAY KANAT ADAPTÖRÜ 2 77BF-501-00 H2		HORIZONTAL SASH ADAPTER 3 YATAY KANAT ADAPTÖRÜ 3 77BF-501-00 / H3		VERTICAL SASH ADAPTER 1 DÜŞEY KANAT ADAPTÖRÜ 1 77BF-501-00 / V1		VERTICAL SASH ADAPTER 2 DÜŞEY KANAT ADAPTÖRÜ 2 77BF-501-00 / V2		ADAPTER 1 ADAPTÖR 1 77BF-502-00 / 1		ADAPTER 2 ADAPTÖR 2 77BF-502-00 / 2		ADAPTER 1 ADAPTÖR 1 77BF-503-00 / 1		ADAPTER 2 ADAPTÖR 2 77BF-503-00 / 2	
OPENING TYPE AÇILIM TİPİ	SECTION TYPE DETAY TİPİ	VERTICAL PROFILE DÜŞEY PROFİL	BOTTOM DETAIL TYPE ALT DETAY TİPİ	QUANTITY ANGULAR MİKTAR / AÇI	FORMULA / FORMÜL	QUANTITY ANGULAR MİKTAR / AÇI	FORMULA / FORMÜL	QUANTITY ANGULAR MİKTAR / AÇI	FORMULA / FORMÜL	QUANTITY ANGULAR MİKTAR / AÇI	FORMULA / FORMÜL	QUANTITY ANGULAR MİKTAR / AÇI	FORMULA / FORMÜL	QUANTITY ANGULAR MİKTAR / AÇI	FORMULA / FORMÜL	QUANTITY ANGULAR MİKTAR / AÇI	FORMULA / FORMÜL	QUANTITY ANGULAR MİKTAR / AÇI	FORMULA / FORMÜL	QUANTITY ANGULAR MİKTAR / AÇI	FORMULA / FORMÜL	QUANTITY ANGULAR MİKTAR / AÇI	FORMULA / FORMÜL	QUANTITY ANGULAR MİKTAR / AÇI	FORMULA / FORMÜL	QUANTITY ANGULAR MİKTAR / AÇI	FORMULA / FORMÜL	QUANTITY ANGULAR MİKTAR / AÇI	FORMULA / FORMÜL	QUANTITY ANGULAR MİKTAR / AÇI	FORMULA / FORMÜL	QUANTITY ANGULAR MİKTAR / AÇI	FORMULA / FORMÜL
4 + 2	8A	77BF-101-18	77BF-101-18	2 45°	FL	2 45°	FH			8 45°	SL1 = ((FL-166)/6)-15,3	4 45°	SL2=SL1+51	12 45°	SH = FH-92	1 90°	FL-54	8 90°	SL1-12	4 90°/45°	SL2+8	-	-	2 90° / 45°	SH+14	2 90° / 45°	SH+7	1 90°	SH+6	1 90°	SH-14	-	-	-	-
		77BF-101-18 + 77BF-401-18						2 90°	FH-54		SL1 = ((FL-218)/6)-15,3					1 90°	FL-106																		
5 + 1	6A	77BF-101-18	77BF-101-18	2 45°	FL	2 45°	FH			12 45°	SL1 = (FL-138)/6	'	'	12 45°	SH = FH-92	1 90°	FL-54	12 90°	SL1-12	-	-	-	-	-	-	-	-	-	-	1 90°	SH+6	1 90°	SH-14	-	-	-	-
	6B & 6C	77BF-101-18									SL1 = (FL-166)/6							8 90°				4 90° / 45°	SL1+8	2 90° / 45°	SH+14	2 90° / 45°	SH+7					2 90°	SH+1		
	6A*	77BF-101-18 + 77BF-401-18						2 90°	FH-54		SL1 = (FL-190)/6					1 90°	FL-106	12 90°		-	-	-	-	-	-	-	-					-	-	-	-
	6B & 6C	77BF-101-18 + 77BF-401-18									SL1 = (FL-218)/6							8 90°				4 90° / 45°	SL1+8	2 90° / 45°	SH+14	2 90° / 45°	SH+7					2 90°	SH+1		
6 + 0	3A	77BF-101-18	77BF-101-18	2 45°	FL	2 45°	FH			10 45°	SL1 = ((FL-152)/6)-7,6	2 45°	SL2=SL1+51	12 45°	SH = FH-92	1 90°	FL-54	10 90°	SL1-12	2 90°/45°	SL2+8	-	-	1 90° / 45°	SH+14	1 90° / 45°	SH+7	1 90°	SH+6	-	-	-	-	-	-
		77BF-101-18 + 77BF-401-18						2 90°	FH-54		SL1 = ((FL-204)/6)-7,6					1 90°	FL-106																		
4 + 3	7A	77BF-101-18	77BF-101-18	2 45°	FL	2 45°	FH			12 45°	SL1 = ((FL-164)/7)-6,6	2 45°	SL2=SL1+51	14 45°	SH = FH-92	1 90°	FL-54	12 90°	SL1-12	2 90°/45°	SL2+8	-	-	1 90° / 45°	SH+14	1 90° / 45°	SH+7	1 90°	SH+6	1 90°	SH-14	-	-	-	-
	7B & 7C	77BF-101-18									SL1 = ((FL-178)/7)-6,6							10 90°				2 90° / 45°	SL1+8	2 90° / 45°		2 90° / 45°						1 90°	SH+1	1 90°	SH-280
	7A*	77BF-101-18 + 77BF-401-18						2 90°	FH-54		SL1 = ((FL-216)/7)-6,6					1 90°	FL-106	12 90°		-	-	-		1 90° / 45°		1 90° / 45°						-	-	-	-
	7B & 7C	77BF-101-18 + 77BF-401-18									SL1 = ((FL-230)/7)-6,6							10 90°				2 90° / 45°	SL1+8	2 90° / 45°		2 90° / 45°						1 90°	SH+1	1 90°	SH-280
5 + 2	7A	77BF-101-18	77BF-101-18	2 45°	FL	2 45°	FH			12 45°	SL1 = ((FL-164)/7)-6,6	2 45°	SL2=SL1+51	14 45°	SH = FH-92	1 90°	FL-54	12 90°	SL1-12	2 90°/45°	SL2+8	-	-	1 90° / 45°	SH+14	1 90° / 45°	SH+7	1 90°	SH+6	1 90°	SH-14	-	-	-	-
	7B & 7C	77BF-101-18									SL1 = ((FL-178)/7)-6,6							10 90°				2 90° / 45°	SL1+8	2 90° / 45°		2 90° / 45°						1 90°	SH+1	1 90°	SH-280
	7A*	77BF-101-18 + 77BF-401-18						2 90°	FH-54		SL1 = ((FL-216)/7)-6,6					1 90°	FL-106	12 90°		-	-	-		1 90° / 45°		1 90° / 45°						-	-	-	-
	7B & 7C	77BF-101-18 + 77BF-401-18									SL1 = ((FL-230)/7)-6,6							10 90°				2 90° / 45°	SL1+8	2 90° / 45°		2 90° / 45°						1 90°	SH+1	1 90°	SH-280

45° **CUTTING SIZE LIST** / KESİM ÖLÇÜ LİSTESİ

45° CUTTING SIZE KESİM ÖLÇÜLERİ				GASKETS / FİTİLLER									GLASS / CAM 77BF-201-18				GLASS / CAM 77BF-202-18				GLAZING BEAD / CAM ÇITASI 77BF-201-18								GLAZING BEAD / CAM ÇITASI 77BF-201-18							
OPENING TYPE AÇILIM TİPİ	SECTION TYPE DETAY TİPİ	VERTICAL PROFILE DÜŞEY PROFİL	BOTTOM DETAIL TYPE ALT DETAY TİPİ	EM77BF-01	EM77BF-02	EM77BF-03	EM3-03	EM3-01	EM2-03	EM1-XX	O.RING-3 mm	EM45-05	GL1			GL2				GL1			GL2				CL1		CH		CL2		CH									
													QUANTITY MİKTAR	FORMULA FORMÜL Yatay	Horizontal / Yatay	QUANTITY MİKTAR	FORMULA FORMÜL	Horizontal / Yatay	FORMULA FORMÜL	Vertical / Düşey	QUANTITY MİKTAR	FORMULA FORMÜL Yatay	Horizontal / Yatay	QUANTITY MİKTAR	FORMULA FORMÜL	Horizontal / Yatay	FORMULA FORMÜL	Vertical / Düşey	QUANTITY MİKTAR	FORMULA FORMÜL Yatay	Horizontal / Yatay	QUANTITY MİKTAR	FORMULA FORMÜL	Vertical / Düşey	QUANTITY MİKTAR	FORMULA FORMÜL Yatay	Horizontal / Yatay	QUANTITY MİKTAR	FORMULA FORMÜL	Vertical / Düşey	QUANTITY MİKTAR	FORMULA FORMÜL Yatay	Horizontal / Yatay	QUANTITY MİKTAR	FORMULA FORMÜL	Vertical / Düşey
6 + 1	7A	77BF-101-18	77BF-101-18	1FL + 12FH	1FL + 12FH	FL	2FL +4FH	-	12 (CL1+CH1) + 2 (CL2 +CH2)	12 (CL1+CH1) + 2 (CL2 +CH2)	12 (CL1+CH1) + 2 (CL2 +CH2)	2 FL+ 4FH	6	GL1 = SL1-98	GH = SH-98	1	GL2 = SL2-98	GH = SH-98	6	GL1 = SL1-88	GH = SH-88	1	GL2 = SL2-88	GH = SH-88	12	CL1 = SL1-78		12	CH = SH-122		2	CL2 = SL2-78		2	CH = SH-122		12	CL1 = SL1-78		12	CH = SH-106		2	CL2 = SL2-78		2	CH = SH-106	
	7B & 7C	77BF-101-18																																										
	7A*	77BF-101-18 + 77BF-401-18					2FL +4FH																																					
	7B & 7C	77BF-101-18 + 77BF-401-18					2FL +6FH																																					
7 + 0	2A	77BF-101-18	77BF-101-18	1FL + 13FH	1FL + 13FH	FL	2FL +3FH	-	14 (CL1+CH1)	14 (CL1+CH1)	14 (CL1+CH1)	2 FL+ 4FH	7	GL1 = SL1-98	GH = SH-98	-	-	-	7	GL1 = SL1-88	GH = SH-88	-	-	-	14	CL1 = SL1-78		14	CH = SH-122		-	-		-	-		14	CL1 = SL1-78		14	CH = SH-106		-	-		-	-	
	2B & 2C	77BF-101-18					2FL +3FH																																					
	2A*	77BF-101-18 + 77BF-401-18					2FL +5FH																																					
	2B & 2C	77BF-101-18 + 77BF-401-18					2FL +5FH																																					
4 + 4	8A	77BF-101-18	77BF-101-18	1FL + 14FH	1FL + 14FH	FL	2FL + 3FH	FH	12 (CL1+CH1) + 4 (CL2 +CH2)	12 (CL1+CH1) + 4 (CL2 +CH2)	12 (CL1+CH1) + 4 (CL2 +CH2)	2 FL+ 4FH	6	GL1 = SL1-98	GH = SH-98	2	GL2 = SL2-98	GH = SH-98	6	GL1 = SL1-88	GH = SH-88	2	GL2 = SL2-88	GH = SH-88	12	CL1 = SL1-78		12	CH = SH-122		4	CL2 = SL2-78		4	CH = SH-122		12	CL1 = SL1-78		12	CH = SH-106		4	CL2 = SL2-78		4	CH = SH-106	
		77BF-101-18 + 77BF-401-18					2FL + 5FH																																					
5 + 3	6A	77BF-101-18	77BF-101-18	1FL + 14FH	1FL + 14FH	FL	2FL +4FH	-	16 (CL1+CH1)	16 (CL1+CH1)	16 (CL1+CH1)	2 FL+ 4FH	8	GL1 = SL1-98	GH = SH-98	-	-	-	8	GL1 = SL1-88	GH = SH-88	-	-	-	16	CL1 = SL1-78		16	CH = SH-122		-	-		-	-		16	CL1 = SL1-78		16	CH = SH-106		-	-		-	-	
	6B & 6C	77BF-101-18					2FL +4FH																																					
	6A*	77BF-101-18 + 77BF-401-18					2FL +6FH																																					
	6B & 6C	77BF-101-18 + 77BF-401-18					2FL +6FH																																					

45° CUTTING SIZE LIST / KESİM ÖLÇÜ LİSTESİ

45° CUTTING SIZE KESİM ÖLÇÜLERİ				HORIZONTAL FRAME YATAY KASA 77BF-101-18		VERTICAL FRAME DÜŞEY KASA 77BF-101-18		ADJUSTING ADAPTER AYAR ADAPTÖRÜ 77BF-401-18		HORIZONTAL SASH 1 YATAY KANAT 1 77BF-201-18		HORIZONTAL SASH 2 YATAY KANAT 2 77BF-201-18		VERTICAL SASH DÜŞEY KANAT 77BF-201-18		FRAME ADAPTER KASA ADAPTÖRÜ 77BF-402-00		HORIZONTAL SASH ADAPTER 1 YATAY KANAT ADAPTÖRÜ 1 77BF-501-00 / H1		HORIZONTAL SASH ADAPTER 2 YATAY KANAT ADAPTÖRÜ 2 77BF-501-00 H2		HORIZONTAL SASH ADAPTER 3 YATAY KANAT ADAPTÖRÜ 3 77BF-501-00 / H3		VERTICAL SASH ADAPTER 1 DÜŞEY KANAT ADAPTÖRÜ 1 77BF-501-00 / V1		VERTICAL SASH ADAPTER 2 DÜŞEY KANAT ADAPTÖRÜ 2 77BF-501-00 / V2		ADAPTER 1 ADAPTÖR 1 77BF-502-00 / 1		ADAPTER 2 ADAPTÖR 2 77BF-502-00 / 2		ADAPTER 1 ADAPTÖR 1 77BF-503-00 / 1		ADAPTER 2 ADAPTÖR 2 77BF-503-00 / 2	
OPENING TYPE AÇILIM TİPİ	SECTION TYPE DETAY TİPİ	VERTICAL PROFILE DÜŞEY PROFİL	BOTTOM DETAIL TYPE ALT DETAY TİPİ	QUANTITY ANGULAR MİKTAR / AÇI	FORMULA / FORMÜL	QUANTITY ANGULAR MİKTAR / AÇI	FORMULA / FORMÜL	QUANTITY ANGULAR MİKTAR / AÇI	FORMULA / FORMÜL	QUANTITY ANGULAR MİKTAR / AÇI	FORMULA / FORMÜL	QUANTITY ANGULAR MİKTAR / AÇI	FORMULA / FORMÜL	QUANTITY ANGULAR MİKTAR / AÇI	FORMULA / FORMÜL	QUANTITY ANGULAR MİKTAR / AÇI	FORMULA / FORMÜL	QUANTITY ANGULAR MİKTAR / AÇI	FORMULA / FORMÜL	QUANTITY ANGULAR MİKTAR / AÇI	FORMULA / FORMÜL	QUANTITY ANGULAR MİKTAR / AÇI	FORMULA / FORMÜL	QUANTITY ANGULAR MİKTAR / AÇI	FORMULA / FORMÜL	QUANTITY ANGULAR MİKTAR / AÇI	FORMULA / FORMÜL	QUANTITY ANGULAR MİKTAR / AÇI	FORMULA / FORMÜL	QUANTITY ANGULAR MİKTAR / AÇI	FORMULA / FORMÜL
6 + 1	7A	77BF-101-18	77BF-101-18	2 45°	FL	2 45°	FH			12 45°	SL1 = ((FL-164)/7)-6,6	2 45°	SL2=SL1+51	14 45°	SH = FH-92	1 90°	FL-54	12 90°	SL1-12	2 90°/45°	SL2+8	-	-	1 90° / 45°	SH+14	1 90° / 45°	SH+7	1 90°	SH+6	1 90°	SH-14	-	-	-	-
	7B & 7C	77BF-101-18									SL1 = ((FL-178)/7)-6,6							10 90°	SL1-12			2 90° / 45°	SL1+8	2 90° / 45°		2 90° / 45°						1 90°	SH+1	1 90°	SH-280
	7A*	77BF-101-18 + 77BF-401-18						2 90°	FH-54		SL1 = ((FL-216)/7)-6,6					1 90°	FL-106	12 90°	SL1-12			-	-	1 90° / 45°		1 90° / 45°						-	-	-	-
	7B & 7C	77BF-101-18 + 77BF-401-18									SL1 = ((FL-230)/7)-6,6							10 90°	SL1-12			2 90° / 45°	SL1+8	2 90° / 45°		2 90° / 45°						1 90°	SH+1	1 90°	SH-280
7 + 0	2A	77BF-101-18	77BF-101-18	2 45°	FL	2 45°	FH			14 45°	SL1 = (FL-150)/7	-	-	14 45°	SH = FH-92	1 90°	FL-54	14 90°	SL1-12	-	-	-	-	-	-	-	-	-	-	-	-	-	-	-	-
	2B & 2C	77BF-101-18									SL1 = (FL-164)/7							12 90°				2 90° / 45°	SL1+8	1 90° / 45°	SH+14	1 90° / 45°	SH+7	1 90°	SH+6	-	-	1 90°	SH+1	-	-
	2A*	77BF-101-18 + 77BF-401-18						2 90°	FH-54		SL1 = (FL-202)/7					1 90°	FL-106	14 90°				-	-	-	-	-	-					-	-	-	-
	2B & 2C	77BF-101-18 + 77BF-401-18									SL1 = (FL-216)/7							12 90°				2 90° / 45°	SL1+8	1 90° / 45°	SH+14	1 90° / 45°	SH+7					1 90°	SH+1	-	-
4 + 4	8A	77BF-101-18	77BF-101-18	2 45°	FL	2 45°	FH			12 45°	SL1 = ((FL-190)/8)-11,5	4 45°	SL2=SL1+51	16 45°	SH = FH-92	1 90°	FL-54	12 90°	SL1-12	4 90°/45°	SL2+8	-	-	2 90° / 45°	SH+14	2 90° / 45°	SH+7	1 90°	SH+6	1 90°	SH-14	-	-	-	-
		77BF-101-18 + 77BF-401-18						2 90°	FH-54		SL1 = ((FL-242)/8)-11,5						FL-106																	
5 + 3	6A	77BF-101-18	77BF-101-18	2 45°	FL	2 45°	FH			16 45°	SL1 = (FL-162)/8	-	-	16 45°	SH = FH-92	1 90°	FL-54	16 90°	SL1-12	-	-	-	-	-	-	-	-	-	-	-	-	-	-	-	-
	6B & 6C	77BF-101-18									SL1 = (FL-190)/8							12 90°				4 90° / 45°	SL1+8	2 90° / 45°	SH+14	2 90° / 45°	SH+7	1 90°	SH+6	1 90°	SH-14	-	-	2 90°	SH+1
	6A*	77BF-101-18 + 77BF-401-18						2 90°	FH-54		SL1 = (FL-214)/8					1 90°	FL-106	16 90°				-	-	-	-	-	-							-	-
	6B & 6C	77BF-101-18 + 77BF-401-18									SL1 = (FL-242)/8							12 90°				4 90° / 45°	SL1+8	2 90° / 45°	SH+14	2 90° / 45°	SH+7					2 90°	SH+1	-	-

45° **CUTTING SIZE LIST** / KESİM ÖLÇÜ LİSTESİ

45° CUTTING SIZE KESİM ÖLÇÜLERİ				GASKETS / FİTİLLER									GLASS / CAM 77BF-201-18				GLASS / CAM 77BF-202-18				GLAZING BEAD / CAM ÇİTASI 77BF-201-18								GLAZING BEAD / CAM ÇİTASI 77BF-201-18							
													GL1				GL2				GL1				GL2				CL1				CH			
OPENING TYPE AÇILIM TİPİ	SECTION TYPE DETAY TİPİ	VERTICAL PROFILE DÜŞEY PROFİL	BOTTOM DETAIL TYPE ALT DETAY TİPİ	EM77BF-01	EM77BF-02	EM77BF-03	EM3-03	EM3-01	EM2-03	EM1-XX	O.RING-3 mm	EM45-05	QUANTITY MİKTAR	FORMULA FORMÜL Horizontal / Yatay	FORMULA FORMÜL Vertical / Düşey		QUANTITY MİKTAR	FORMULA FORMÜL Horizontal / Yatay	FORMULA FORMÜL Vertical / Düşey		QUANTITY MİKTAR	FORMULA FORMÜL Horizontal / Yatay	FORMULA FORMÜL Vertical / Düşey		QUANTITY MİKTAR	FORMULA FORMÜL Horizontal / Yatay		QUANTITY MİKTAR	FORMULA FORMÜL Vertical / Düşey		QUANTITY MİKTAR	FORMULA FORMÜL Horizontal / Yatay		QUANTITY MİKTAR	FORMULA FORMÜL Vertical / Düşey		QUANTITY MİKTAR	FORMULA FORMÜL Horizontal / Yatay		QUANTITY MİKTAR	FORMULA FORMÜL Vertical / Düşey	
6 + 2	8A	77BF-101-18	77BF-101-18	1FL + 14FH	1FL + 14FH	FL	2FL + 3FH	FH	12 (CL1+CH1) + 4 (CL2 +CH2)	12 (CL1+CH1) + 4 (CL2 +CH2)	12 (CL1+CH1) + 4 (CL2 +CH2)	2 FL+ 4FH	6	GL1 = SL1-98	GH = SH-98		2	GL2 = SL2-98	GH = SH-98		6	GL1 = SL1-88	GH = SH-88		2	GL2 = SL2-88	GH = SH-88		12	CL1 = SL1-78		12	CH = SH-122		4	CL2 = SL2-78		4	CH = SH-122		12	CL1 = SL1-78		12	CH = SH-106		4	CL2 = SL2-78		4	CH = SH-106	
		77BF-101-18 + 77BF-401-18					1FL + 5FH																																					
7 + 1	6A	77BF-101-18	77BF-101-18	1FL + 14FH	1FL + 14FH	FL	2FL + 4FH	-	16 (CL1+CH1)	16 (CL1+CH1)	16 (CL1+CH1)	2 FL+ 4FH	8	GL1 = SL1-98	GH = SH-98		-	-	-		8	GL1 = SL1-88	GH = SH-88		-	-	-		16	CL1 = SL1-78		16	CH = SH-122		-	-		-	-		16	CL1 = SL1-78		16	CH = SH-106		-	-		-	-	
	6B & 6C	77BF-101-18					2FL + 4FH																																					
	6A*	77BF-101-18 + 77BF-401-18					2FL + 6FH																																					
	6B & 6C	77BF-101-18 + 77BF-401-18					2FL + 6FH																																					
5 + 4	7A	77BF-101-18	77BF-101-18	1FL + 16FH	1FL + 16FH	FL	2FL + 4FH	-	16 (CL1+CH1) + 2 (CL2 +CH2)	16 (CL1+CH1) + 2 (CL2 +CH2)	16 (CL1+CH1) + 2 (CL2 +CH2)	2 FL+ 4FH	8	GL1 = SL1-98	GH = SH-98		1	GL2 = SL2-98	GH = SH-98		8	GL1 = SL1-88	GH = SH-88		1	GL2 = SL2-88	GH = SH-88		16	CL1 = SL1-78		16	CH = SH-122		2	CL2 = SL2-78		2	CH = SH-122		16	CL1 = SL1-78		16	CH = SH-106		2	CL2 = SL2-78		2	CH = SH-106	
	7B & 7C	77BF-101-18					2FL + 4FH																																					
	7A*	77BF-101-18 + 77BF-401-18					2FL + 6FH																																					
	7B & 7C	77BF-101-18 + 77BF-401-18					2FL + 6FH																																					
6 + 3	7A	77BF-101-18	77BF-101-18	1FL + 16FH	1FL + 16FH	FL	2FL + 4FH	-	16 (CL1+CH1) + 2 (CL2 +CH2)	16 (CL1+CH1) + 2 (CL2 +CH2)	16 (CL1+CH1) + 2 (CL2 +CH2)	2 FL+ 4FH	8	GL1 = SL1-98	GH = SH-98		1	GL2 = SL2-98	GH = SH-98		8	GL1 = SL1-88	GH = SH-88		1	GL2 = SL2-88	GH = SH-88		16	CL1 = SL1-78		16	CH = SH-122		2	CL2 = SL2-78		2	CH = SH-122		16	CL1 = SL1-78		16	CH = SH-106		2	CL2 = SL2-78		2	CH = SH-106	
	7B & 7C	77BF-101-18					2FL + 4FH																																					
	7A*	77BF-101-18 + 77BF-401-18					2FL + 6FH																																					
	7B & 7C	77BF-101-18 + 77BF-401-18					2FL + 6FH																																					
7 + 2	7A	77BF-101-18	77BF-101-18	1FL + 16FH	1FL + 16FH	FL	2FL + 4FH	-	16 (CL1+CH1) + 2 (CL2 +CH2)	16 (CL1+CH1) + 2 (CL2 +CH2)	16 (CL1+CH1) + 2 (CL2 +CH2)	2 FL+ 4FH	8	GL1 = SL1-98	GH = SH-98		1	GL2 = SL2-98	GH = SH-98		8	GL1 = SL1-88	GH = SH-88		1	GL2 = SL2-88	GH = SH-88		16	CL1 = SL1-78		16	CH = SH-122		2	CL2 = SL2-78		2	CH = SH-122		16	CL1 = SL1-78		16	CH = SH-106		2	CL2 = SL2-78		2	CH = SH-106	
	7B & 7C	77BF-101-18					2FL + 4FH																																					
	7A*	77BF-101-18 + 77BF-401-18					2FL + 6FH																																					
	7B & 7C	77BF-101-18 + 77BF-401-18					2FL + 6FH																																					

45° CUTTING SIZE LIST / KESİM ÖLÇÜ LİSTESİ

45° CUTTING SIZE KESİM ÖLÇÜLERİ				HORIZONTAL FRAME YATAY KASA 77BF-101-18		VERTICAL FRAME DÜŞEY KASA 77BF-101-18		ADJUSTING ADAPTER AYAR ADAPTÖRÜ 77BF-401-18		HORIZONTAL SASH 1 YATAY KANAT 1 77BF-201-18		HORIZONTAL SASH 2 YATAY KANAT 2 77BF-201-18		VERTICAL SASH DÜŞEY KANAT 77BF-201-18		FRAME ADAPTER KASA ADAPTÖRÜ 77BF-402-00		HORIZONTAL SASH ADAPTER 1 YATAY KANAT ADAPTÖRÜ 1 77BF-501-00 / H1		HORIZONTAL SASH ADAPTER 2 YATAY KANAT ADAPTÖRÜ 2 77BF-501-00 H2		HORIZONTAL SASH ADAPTER 3 YATAY KANAT ADAPTÖRÜ 3 77BF-501-00 / H3		VERTICAL SASH ADAPTER 1 DÜŞEY KANAT ADAPTÖRÜ 1 77BF-501-00 / V1		VERTICAL SASH ADAPTER 2 DÜŞEY KANAT ADAPTÖRÜ 2 77BF-501-00 / V2		ADAPTER 1 ADAPTÖR 1 77BF-502-00 / 1		ADAPTER 2 ADAPTÖR 2 77BF-502-00 / 2		ADAPTER 1 ADAPTÖR 1 77BF-503-00 / 1		ADAPTER 2 ADAPTÖR 2 77BF-503-00 / 2	
OPENING TYPE AÇILIM TİPİ	SECTION TYPE DETAY TİPİ	VERTICAL PROFILE DÜŞEY PROFİL	BOTTOM DETAIL TYPE ALT DETAY TİPİ	QUANTITY ANGULAR MİKTAR / AÇI	FORMULA / FORMÜL	QUANTITY ANGULAR MİKTAR / AÇI	FORMULA / FORMÜL	QUANTITY ANGULAR MİKTAR / AÇI	FORMULA / FORMÜL	QUANTITY ANGULAR MİKTAR / AÇI	FORMULA / FORMÜL	QUANTITY ANGULAR MİKTAR / AÇI	FORMULA / FORMÜL	QUANTITY ANGULAR MİKTAR / AÇI	FORMULA / FORMÜL	QUANTITY ANGULAR MİKTAR / AÇI	FORMULA / FORMÜL	QUANTITY ANGULAR MİKTAR / AÇI	FORMULA / FORMÜL	QUANTITY ANGULAR MİKTAR / AÇI	FORMULA / FORMÜL	QUANTITY ANGULAR MİKTAR / AÇI	FORMULA / FORMÜL	QUANTITY ANGULAR MİKTAR / AÇI	FORMULA / FORMÜL	QUANTITY ANGULAR MİKTAR / AÇI	FORMULA / FORMÜL	QUANTITY ANGULAR MİKTAR / AÇI	FORMULA / FORMÜL	QUANTITY ANGULAR MİKTAR / AÇI	FORMULA / FORMÜL	QUANTITY ANGULAR MİKTAR / AÇI	FORMULA / FORMÜL
6 + 2	8A	77BF-101-18	77BF-101-18	2 45°	FL	2 45°	FH			12 45°	SL1 = ((FL-190)/8)-11,5	4 45°	SL2=SL1+51	16 45°	SH = FH-92	1 90°	FL-44	12 90°	SL1-12	4 90°/45°	SL2+8	-	-	2 90° / 45°	SH+14	2 90° / 45°	SH+7	1 90°	SH+6	1 90°	SH-14	-	-	-	-
		77BF-101-18 + 77BF-401-18						2 90°	FH-54		SL1 = ((FL-242)/8)-11,5					1 90°	FL-106																		
7 + 1	6A	77BF-101-18	77BF-101-18	2 45°	FL	2 45°	FH			16 45°	SL1 = (FL-162)/8	-	-	16 45°	SH = FH-92	1 90°	FL-54	16 90°	SL1-12	-	-	-	-	4 90° / 45°	SL1+8	2 90° / 45°	SH+14	2 90° / 45°	SH+7	1 90°	SH+6	1 90°	SH-14	-	-	-	-
	6B & 6C	77BF-101-18									SL1 = (FL-190)/8							12 90°				-	-	-	-	-	-					2 90°	SH+1		
	6A*	77BF-101-18 + 77BF-401-18						2 90°	FH-54		SL1 = (FL-214)/8					1 90°	FL-106	16 90°				4 90° / 45°	SL1+8	2 90° / 45°	SH+14	2 90° / 45°	SH+7					-	-		
	6B & 6C	77BF-101-18 + 77BF-401-18									SL1 = (FL-242)/8							12 90°				-	-	-	-	-	-					2 90°	SH+1		
5 + 4	7A	77BF-101-18	77BF-101-18	2 45°	FL	2 45°	FH			16 45°	SL1 = ((FL-188)/9)-5,1	2 45°	SL2=SL1+51	18 45°	SH = FH-92	1 90°	FL-54	16 90°	SL1-12	2 90°/45°	SL2+8	-	-	1 90° / 45°	SH+14	1 90° / 45°	SH+7	1 90°	SH+6	1 90°	SH-14	-	-	-	-
	7B & 7C	77BF-101-18									SL1 = ((FL-202)/9)-5,1							14 90°				2 90° / 45°	SL1+8	2 90° / 45°	SH+14	1 90° / 45°						1 90°	SH+1	1 90°	SH-280
	7A*	77BF-101-18 + 77BF-401-18						2 90°	FH-54		SL1 = ((FL-240)/9)-5,1					1 90°	FL-106	16 90°				-	-	1 90° / 45°	SH+14	2 90° / 45°						-	-	-	-
	7B & 7C	77BF-101-18 + 77BF-401-18									SL1 = ((FL-254)/9)-5,1							14 90°				2 90° / 45°	SL1+8	2 90° / 45°	SH+14	2 90° / 45°						1 90°	SH+1	1 90°	SH-280
6 + 3	7A	77BF-101-18	77BF-101-18	2 45°	FL	2 45°	FH			16 45°	SL1 = ((FL-188)/9)-5,1	2 45°	SL2=SL1+51	18 45°	SH = FH-92	1 90°	FL-54	16 90°	SL1-12	2 90°/45°	SL2+8	-	-	1 90° / 45°	SH+14	1 90° / 45°	SH+7	1 90°	SH+6	1 90°	SH-14	-	-	-	-
	7B & 7C	77BF-101-18									SL1 = ((FL-202)/9)-5,1							14 90°				2 90° / 45°	SL1+8	2 90° / 45°		2 90° / 45°						1 90°	SH+1	1 90°	SH-280
	7A*	77BF-101-18 + 77BF-401-18						2 90°	SH - 54		SL1 = ((FL-240)/9)-5,1					1 90°	FL-106	16 90°				-	-	1 90° / 45°		2 90° / 45°						-	-	-	-
	7B & 7C	77BF-101-18 + 77BF-401-18									SL1 = ((FL-254)/9)-5,1							14 90°				2 90° / 45°	SL1+8	2 90° / 45°		2 90° / 45°						1 90°	SH+1	1 90°	SH-280
7 + 2	7A	77BF-101-18	77BF-101-18	2 45°	FL	2 45°	FH			16 45°	SL1 = ((FL-188)/9)-5,1	2 45°	SL2=SL1+51	18 45°	SH = FH-92	1 90°	FL-54	16 90°	SL1-12	2 90°/45°	SL2+8	-	-	1 90° / 45°	SH+14	1 90° / 45°	SH+7	1 90°	SH+6	1 90°	SH-14	-	-	-	-
	7B & 7C	77BF-101-18									SL1 = ((FL-202)/9)-5,1							14 90°				2 90° / 45°	SL1+8	2 90° / 45°		2 90° / 45°						1 90°	SH+1	1 90°	SH-280
	7A*	77BF-101-18 + 77BF-401-18						2 90°	SH - 54		SL1 = ((FL-240)/9)-5,1					1 90°	FL-106	16 90°				-	-	1 90° / 45°		2 90° / 45°						-	-	-	-
	7B & 7C	77BF-101-18 + 77BF-401-18									SL1 = ((FL-254)/9)-5,1							14 90°				2 90° / 45°	SL1+8	2 90° / 45°		2 90° / 45°						1 90°	SH+1	1 90°	SH-280

45° **CUTTING SIZE LIST** / KESİM ÖLÇÜ LİSTESİ

45° CUTTING SIZE KESİM ÖLÇÜLERİ				GASKETS / FİTİLLER									GLASS / CAM 77BF-201-18				GLASS / CAM 77BF-202-18				GLAZING BEAD / CAM ÇİTASI 77BF-201-18								GLAZING BEAD / CAM ÇİTASI 77BF-201-18							
													GL1				GL2				GL1				GL2				CL1		CH		CL2		CH	
OPENING TYPE AÇILIM TİPİ	SECTION TYPE DETAY TİPİ	VERTICAL PROFILE DÜŞEY PROFİL	BOTTOM DETAIL TYPE ALT DETAY TİPİ	EM77BF-01	EM77BF-02	EM77BF-03	EM3-03	EM3-01	EM2-03	EM1-XX	O.RING-3 mm	EM45-05	QUANTITY MİKTAR	FORMULA FORMÜL Horizontal / Yatay	FORMULA FORMÜL Vertical / Düşey		QUANTITY MİKTAR	FORMULA FORMÜL Horizontal / Yatay	FORMULA FORMÜL Vertical / Düşey		QUANTITY MİKTAR	FORMULA FORMÜL Horizontal / Yatay	FORMULA FORMÜL Vertical / Düşey		QUANTITY MİKTAR	FORMULA FORMÜL Horizontal / Yatay		QUANTITY MİKTAR	FORMULA FORMÜL Horizontal / Yatay		QUANTITY MİKTAR	FORMULA FORMÜL Horizontal / Yatay		QUANTITY MİKTAR	FORMULA FORMÜL Horizontal / Yatay		QUANTITY MİKTAR	FORMULA FORMÜL Horizontal / Yatay	
5 + 5	6A	77BF-101-18	77BF-101-18	1FL + 18FH	1FL + 18FH	FL	2FL + 4FH	-	20 (CL1+CH1)	20 (CL1+CH1)	20 (CL1+CH1)	2 FL+ 4FH	10	GL1 = SL1-98	GH = SH-98	-	-	-	-	10	GL1 = SL1-88	GH = SH-88	-	-	-	-	20	CL1 = SL1-78	20	CH = SH-122	-	-	-	-	20	CL1 = SL1-78	20	CH = SH-106	-	-	-	-
	6B & 6C	77BF-101-18					2FL + 4FH																																	
	6A*	77BF-101-18 + 77BF-401-18					2FL + 6FH																																	
	6B & 6C	77BF-101-18 + 77BF-401-18					2FL + 6FH																																	
7 + 3	6A	77BF-101-18	77BF-101-18	1FL + 18FH	1FL + 18FH	FL	2FL + 4FH	-	20 (CL1+CH1)	20 (CL1+CH1)	20 (CL1+CH1)	2 FL+ 4FH	10	GL1 = SL1-98	GH = SH-98	-	-	-	-	10	GL1 = SL1-88	GH = SH-88	-	-	-	-	20	CL1 = SL1-78	20	CH = SH-122	-	-	-	-	20	CL1 = SL1-78	20	CH = SH-106	-	-	-	-
	6B & 6C	77BF-101-18					2FL + 4FH																																	
	6A*	77BF-101-18 + 77BF-401-18					2FL + 6FH																																	
	6B & 6C	77BF-101-18 + 77BF-401-18					2FL + 6FH																																	
6 + 4	8A	77BF-101-18	77BF-101-18	1FL + 18FH	1FL + 18FH	FL	2FL + 3FH	FH	16 (CL1+CH1) + 4 (CL2 +CH2)	16 (CL1+CH1) + 4 (CL2 +CH2)	16 (CL1+CH1) + 4 (CL2 +CH2)	2 FL+ 4FH	8	GL1 = SL1-98	GH = SH-98	2	GL2 = SL2-98	GH = SH-98	8	GL1 = SL1-88	GH = SH-88	2	GL2 = SL2-88	GH = SH-88	16	CL1 = SL1-78	16	CH = SH-122	4	CL2 = SL2-78	4	CH = SH-122	16	CL1 = SL1-78	16	CH = SH-106	4	CL2 = SL2-78	4	CH = SH-106
		77BF-101-18 + 77BF-401-18					2FL + 5FH																																	
6 + 5	7A	77BF-101-18	77BF-101-18	1FL + 20FH	1FL + 20FH	FL	2FL + 4FH	-	20 (CL1+CH1) + 2 (CL2 +CH2)	20 (CL1+CH1) + 2 (CL2 +CH2)	20 (CL1+CH1) + 2 (CL2 +CH2)	2 FL+ 4FH	10	GL1 = SL1-98	GH = SH-98	1	GL2 = SL2-98	GH = SH-98	10	GL1 = SL1-88	GH = SH-88	1	GL2 = SL2-88	GH = SH-88	20	CL1 = SL1-78	20	CH = SH-122	2	CL2 = SL2-78	2	CH = SH-122	20	CL1 = SL1-78	20	CH = SH-106	2	CL2 = SL2-78	2	CH = SH-106
	7B & 7C	77BF-101-18					2FL + 4FH																																	
	7A*	77BF-101-18 + 77BF-401-18					2FL + 6FH																																	
	7B & 7C	77BF-101-18 + 77BF-401-18					2FL + 6FH																																	
7 + 4	7A	77BF-101-18	77BF-101-18	1FL + 20FH	1FL + 20FH	FL	2FL + 4FH	-	20 (CL1+CH1) + 2 (CL2 +CH2)	20 (CL1+CH1) + 2 (CL2 +CH2)	20 (CL1+CH1) + 2 (CL2 +CH2)	2 FL+ 4FH	10	GL1 = SL1-98	GH = SH-98	1	GL2 = SL2-98	GH = SH-98	10	GL1 = SL1-88	GH = SH-88	1	GL2 = SL2-88	GH = SH-88	20	CL1 = SL1-78	20	CH = SH-122	2	CL2 = SL2-78	2	CH = SH-122	20	CL1 = SL1-78	20	CH = SH-106	2	CL2 = SL2-78	2	CH = SH-106
	7B & 7C	77BF-101-18					2FL + 4FH																																	
	7A*	77BF-101-18 + 77BF-401-18					2FL + 6FH																																	
	7B & 7C	77BF-101-18 + 77BF-401-18					2FL + 6FH																																	

45° CUTTING SIZE LIST / KESİM ÖLÇÜ LİSTESİ

45° CUTTING SIZE KESİM ÖLÇÜLERİ				HORIZONTAL FRAME YATAY KASA 77BF-101-18		VERTICAL FRAME DÜŞEY KASA 77BF-101-18		ADJUSTING ADAPTER AYAR ADAPTÖRÜ 77BF-401-18		HORIZONTAL SASH 1 YATAY KANAT 1 77BF-201-18		HORIZONTAL SASH 2 YATAY KANAT 2 77BF-201-18		VERTICAL SASH DÜŞEY KANAT 77BF-201-18		FRAME ADAPTER KASA ADAPTÖRÜ 77BF-402-00		HORIZONTAL SASH ADAPTER 1 YATAY KANAT ADAPTÖRÜ 1 77BF-501-00 / H1		HORIZONTAL SASH ADAPTER 2 YATAY KANAT ADAPTÖRÜ 2 77BF-501-00 H2		HORIZONTAL SASH ADAPTER 3 YATAY KANAT ADAPTÖRÜ 3 77BF-501-00 / H3		VERTICAL SASH ADAPTER 1 DÜŞEY KANAT ADAPTÖRÜ 1 77BF-501-00 / V1		VERTICAL SASH ADAPTER 2 DÜŞEY KANAT ADAPTÖRÜ 2 77BF-501-00 / V2		ADAPTER 1 ADAPTÖR 1 77BF-502-00 / 1		ADAPTER 2 ADAPTÖR 2 77BF-502-00 / 2		ADAPTER 1 ADAPTÖR 1 77BF-503-00 / 1		ADAPTER 2 ADAPTÖR 2 77BF-503-00 / 2	
OPENING TYPE AÇILIM TİPİ	SECTION TYPE DETAY TİPİ	VERTICAL PROFILE DÜŞEY PROFİL	BOTTOM DETAIL TYPE ALT DETAY TİPİ	QUANTITY ANGULAR MİKTAR / AÇI	FORMULA / FORMÜL	QUANTITY ANGULAR MİKTAR / AÇI	FORMULA / FORMÜL	QUANTITY ANGULAR MİKTAR / AÇI	FORMULA / FORMÜL	QUANTITY ANGULAR MİKTAR / AÇI	FORMULA / FORMÜL	QUANTITY ANGULAR MİKTAR / AÇI	FORMULA / FORMÜL	QUANTITY ANGULAR MİKTAR / AÇI	FORMULA / FORMÜL	QUANTITY ANGULAR MİKTAR / AÇI	FORMULA / FORMÜL	QUANTITY ANGULAR MİKTAR / AÇI	FORMULA / FORMÜL	QUANTITY ANGULAR MİKTAR / AÇI	FORMULA / FORMÜL	QUANTITY ANGULAR MİKTAR / AÇI	FORMULA / FORMÜL	QUANTITY ANGULAR MİKTAR / AÇI	FORMULA / FORMÜL	QUANTITY ANGULAR MİKTAR / AÇI	FORMULA / FORMÜL	QUANTITY ANGULAR MİKTAR / AÇI	FORMULA / FORMÜL	QUANTITY ANGULAR MİKTAR / AÇI	FORMULA / FORMÜL	QUANTITY ANGULAR MİKTAR / AÇI	FORMULA / FORMÜL
5 + 5	6A	77BF-101-18	77BF-101-18	2 45°	FL	2 45°	FH			20 45°	SL1 = (FL-186)/10	-	'	20 45°	SH = FH-92	1 90°	FL-54	20 90°	SL1-12	-	-	-	-	-	-	-	-	-	-	1 90°	SH+6	1 90°	SH-14	-	-	-	-
	6B & 6C	77BF-101-18									SL1 = (FL-214)/10							16 90°				4 90° / 45°	SL1+8	2 90° / 45°	SH+14	2 90° / 45°	SH+7					2 90°	SH+1		
	6A*	77BF-101-18 + 77BF-401-18						2 90°	SH - 54		SL1 = (FL-238)/10					1 90°	FL-106	20 90°				-	-	-	-	-	-					-	-		
	6B & 6C	77BF-101-18 + 77BF-401-18									SL1 = (FL-266)/10							16 90°				4 90° / 45°	SL1+8	2 90° / 45°	SH+14	2 90° / 45°	SH+7					2 90°	SH+1		
7 + 3	6A	77BF-101-18	77BF-101-18	2 45°	FL	2 45°	FH			20 45°	SL1 = (FL-186)/10	-	'	20 45°	SH = FH-92	1 90°	FL-54	20 90°	SL1-12	-	-	-	-	-	-	-	-	-	-	1 90°	SH+6	1 90°	SH-14	-	-	-	-
	6B & 6C	77BF-101-18									SL1 = (FL-214)/10							16 90°				4 90° / 45°	SL1+8	2 90° / 45°	SH+14	2 90° / 45°	SH+7					2 90°	SH+1		
	6A*	77BF-101-18 + 77BF-401-18						2 90°	SH - 54		SL1 = (FL-238)/10					1 90°	FL-106	20 90°				-	-	-	-	-	-					-	-		
	6B & 6C	77BF-101-18 + 77BF-401-18									SL1 = (FL-266)/10							16 90°				4 90° / 45°	SL1+8	2 90° / 45°	SH+14	2 90° / 45°	SH+7					2 90°	SH+1		
6 + 4	8A	77BF-101-18	77BF-101-18	2 45°	FL	2 45°	FH			16 45°	SL1 = ((FL-214)/10)-9,2	4 45°	SL2=SL1+51	20 45°	SH = FH-92	1 90°	FL-54	16 90°	SL1-12	4 90°/45°	SL2+8	-	-	2 90° / 45°	SH+14	2 90° / 45°	SH+7	1 90°	SH+6	1 90°	SH-14	-	-	-	-
		77BF-101-18 + 77BF-401-18						2 90°	FH-54		SL1 = ((FL-266)/10)-9,2						FL-106																			
6 + 5	7A	77BF-101-18	77BF-101-18	2 45°	FL	2 45°	FH			20 45°	SL1 = ((FL-212)/11)-4,1	2 45°	SL2=SL1+51	22 45°	SH = FH-92	1 90°	FL-54	20 90°	SL1-12	2 90°/45°	SL2+8	-	-	1 90° / 45°	SH+14	1 90° / 45°	SH+7	1 90°	SH+6	1 90°	SH-14	-	-	-	-
	7B & 7C	77BF-101-18									SL1 = ((FL-226)/11)-4,1							18 90°				2 90° / 45°	SL1+8	2 90° / 45°		2 90° / 45°						1 90°	SH+1	1 90°	SH-280
	7A*	77BF-101-18 + 77BF-401-18						2 90°	SH - 54		SL1 = ((FL-264)/11)-4,1					1 90°	FL-106	20 90°				-	-	1 90° / 45°		1 90° / 45°						-	-	-	-
	7B & 7C	77BF-101-18 + 77BF-401-18									SL1 = ((FL-278)/11)-4,1							18 90°				2 90° / 45°	SL1+8	2 90° / 45°		2 90° / 45°						1 90°	SH+1	1 90°	SH-280
7 + 4	7A	77BF-101-18	77BF-101-18	2 45°	FL	2 45°	FH			20 45°	SL1 = ((FL-212)/11)-4,1	2 45°	SL2=SL1+51	22 45°	SH = FH-92	1 90°	FL-54	20 90°	SL1-12	2 90°/45°	SL2+8	-	-	1 90° / 45°	SH+14	1 90° / 45°	SH+7	1 90°	SH+6	1 90°	SH-14	-	-	-	-
	7B & 7C	77BF-101-18									SL1 = ((FL-226)/11)-4,1							18 90°				2 90° / 45°	SL1+8	2 90° / 45°		2 90° / 45°						1 90°	SH+1	1 90°	SH-280
	7A*	77BF-101-18 + 77BF-401-18						2 90°	SH - 54		SL1 = ((FL-264)/11)-4,1					1 90°	FL-106	20 90°				-	-	1 90° / 45°		1 90° / 45°						-	-	-	-
	7B & 7C	77BF-101-18 + 77BF-401-18									SL1 = ((FL-278)/11)-4,1							18 90°				2 90° / 45°	SL1+8	2 90° / 45°		2 90° / 45°						1 90°	SH+1	1 90°	SH-280

45° **CUTTING SIZE LIST** / KESİM ÖLÇÜ LİSTESİ

45° CUTTING SIZE KESİM ÖLÇÜLERİ				GASKETS / FİTİLLER									GLASS / CAM 77BF-201-18				GLASS / CAM 77BF-202-18				GLAZING BEAD / CAM ÇITASI 77BF-201-18								GLAZING BEAD / CAM ÇITASI 77BF-201-18							
													GL1				GL2				GL1				GL2				CL1				CH			
OPENING TYPE AÇILIM TİPİ	SECTION TYPE DETAY TİPİ	VERTICAL PROFILE DÜŞEY PROFİL	BOTTOM DETAIL TYPE ALT DETAY TİPİ	EM77BF-01	EM77BF-02	EM77BF-03	EM3-03	EM3-01	EM2-03	EM1-XX	O.RING-3 mm	EM45-05	QUANTITY MİKTAR	FORMULA FORMÜL Horizontal / Yatay	FORMULA FORMÜL Vertical / Düşey		QUANTITY MİKTAR	FORMULA FORMÜL Horizontal / Yatay	FORMULA FORMÜL Vertical / Düşey		QUANTITY MİKTAR	FORMULA FORMÜL Horizontal / Yatay	FORMULA FORMÜL Vertical / Düşey		QUANTITY MİKTAR	FORMULA FORMÜL Horizontal / Yatay	FORMULA FORMÜL Vertical / Düşey		QUANTITY MİKTAR	FORMULA FORMÜL Horizontal / Yatay	FORMULA FORMÜL Vertical / Düşey		QUANTITY MİKTAR	FORMULA FORMÜL Horizontal / Yatay	FORMULA FORMÜL Vertical / Düşey	
6 + 6	8A	77BF-101-18	77BF-101-18	1FL + 22FH	1FL + 22FH	FL	2FL + 3FH	FH	20 (CL1+CH1) + 4 (CL2 +CH2)	20 (CL1+CH1) + 4 (CL2 +CH2)	20 (CL1+CH1) + 4 (CL2 +CH2)	2 FL+ 4FH	10	GL1 = SL1-98	GH = SH-98		2	GL2 = SL2-98	GH = SH-98		10	GL1 = SL1-88	GH = SH-88		2	GL2 = SL2-88	GH = SH-88		20	CL1 = SL1-78			20	CH = SH-122			4	CL2 = SL2-78			4	CH = SH-122			20	CL1 = SL1-78			20	CH = SH-106			4	CL2 = SL2-78			4	CH = SH-106	
							2FL + 5FH																																																
		77BF-101-18 + 77BF-401-18																																																		
7 + 5	6A	77BF-101-18	77BF-101-18	1FL + 22FH	1FL + 22FH	FL	2FL + 4FH	-	24 (CL1+CH1)	24 (CL1+CH1)	24 (CL1+CH1)	2 FL+ 4FH	12	GL1 = SL1-98	GH = SH-98		-	-	-		12	GL1 = SL1-88	GH = SH-88		-	-	-		24	CL1 = SL1-78			24	CH = SH-122			-	-			-	-			24	CL1 = SL1-78			24	CH = SH-106			-	-			-	-	
	6B & 6C	77BF-101-18					2FL + 4FH																																														
	6A*	77BF-101-18 + 77BF-401-18					2FL + 6FH																																														
	6B & 6C	77BF-101-18 + 77BF-401-18					2FL + 6FH																																														
7 + 6	7A	77BF-101-18	77BF-101-18	1FL + 24FH	1FL + 24FH	FL	2FL + 4FH	-	24 (CL1+CH1) + 2 (CL2 +CH2)	24 (CL1+CH1) + 2 (CL2 +CH2)	24 (CL1+CH1) + 2 (CL2 +CH2)	2 FL+ 4FH	12	GL1 = SL1-98	GH = SH-98		1	GL2 = SL2-98	GH = SH-98		12	GL1 = SL1-88	GH = SH-88		1	GL2 = SL2-88	GH = SH-88		24	CL1 = SL1-78			24	CH = SH-122			2	CL2 = SL2-78			2	CH = SH-122			24	CL1 = SL1-78			24	CH = SH-106			2	CL2 = SL2-78			2	CH = SH-106	
	7B & 7C	77BF-101-18					2FL + 4FH																																													
	7A*	77BF-101-18 + 77BF-401-18					2FL + 6FH																																														
	7B & 7C	77BF-101-18 + 77BF-401-18					2FL + 6FH																																														
7 + 7	6A	77BF-101-18	77BF-101-18	1FL + 26FH	1FL + 26FH	FL	2FL + 4FH	-	28 (CL1+CH1)	28 (CL1+CH1)	28 (CL1+CH1)	2 FL+ 4FH	14	GL1 = SL1-98	GH = SH-98		-	-	-		14	GL1 = SL1-88	GH = SH-88		-	-	-		28	CL1 = SL1-78			28	CH = SH-122			-	-			-	-			28	CL1 = SL1-78			28	CH = SH-106			-	-			-	-	
	6B & 6C	77BF-101-18					2FL + 4FH																																													
	6A*	77BF-101-18 + 77BF-401-18					2FL + 6FH																																														
	6B & 6C	77BF-101-18 + 77BF-401-18					2FL + 6FH																																														

45° CUTTING SIZE LIST / KESİM ÖLÇÜ LİSTESİ

45° CUTTING SIZE KESİM ÖLÇÜLERİ				HORIZONTAL FRAME YATAY KASA 77BF-101-18		VERTICAL FRAME DÜŞEY KASA 77BF-101-18		ADJUSTING ADAPTER AYAR ADAPTÖRÜ 77BF-401-18		HORIZONTAL SASH 1 YATAY KANAT 1 77BF-201-18		HORIZONTAL SASH 2 YATAY KANAT 2 77BF-201-18		VERTICAL SASH DÜŞEY KANAT 77BF-201-18		FRAME ADAPTER KASA ADAPTÖRÜ 77BF-402-00		HORIZONTAL SASH ADAPTER 1 YATAY KANAT ADAPTÖRÜ 1 77BF-501-00 / H1		HORIZONTAL SASH ADAPTER 2 YATAY KANAT ADAPTÖRÜ 2 77BF-501-00 H2		HORIZONTAL SASH ADAPTER 3 YATAY KANAT ADAPTÖRÜ 3 77BF-501-00 / H3		VERTICAL SASH ADAPTER 1 DÜŞEY KANAT ADAPTÖRÜ 1 77BF-501-00 / V1		VERTICAL SASH ADAPTER 2 DÜŞEY KANAT ADAPTÖRÜ 2 77BF-501-00 / V2		ADAPTER 1 ADAPTÖR 1 77BF-502-00 / 1		ADAPTER 2 ADAPTÖR 2 77BF-502-00 / 2		ADAPTER 1 ADAPTÖR 1 77BF-503-00 / 1		ADAPTER 2 ADAPTÖR 2 77BF-503-00 / 2	
OPENING TYPE AÇILIM TİPİ	SECTION TYPE DETAY TİPİ	VERTICAL PROFILE DÜŞEY PROFİL	BOTTOM DETAIL TYPE ALT DETAY TİPİ	QUANTITY ANGULAR MİKTAR / AÇI	FORMULA / FORMÜL	QUANTITY ANGULAR MİKTAR / AÇI	FORMULA / FORMÜL	QUANTITY ANGULAR MİKTAR / AÇI	FORMULA / FORMÜL	QUANTITY ANGULAR MİKTAR / AÇI	FORMULA / FORMÜL	QUANTITY ANGULAR MİKTAR / AÇI	FORMULA / FORMÜL	QUANTITY ANGULAR MİKTAR / AÇI	FORMULA / FORMÜL	QUANTITY ANGULAR MİKTAR / AÇI	FORMULA / FORMÜL	QUANTITY ANGULAR MİKTAR / AÇI	FORMULA / FORMÜL	QUANTITY ANGULAR MİKTAR / AÇI	FORMULA / FORMÜL	QUANTITY ANGULAR MİKTAR / AÇI	FORMULA / FORMÜL	QUANTITY ANGULAR MİKTAR / AÇI	FORMULA / FORMÜL	QUANTITY ANGULAR MİKTAR / AÇI	FORMULA / FORMÜL	QUANTITY ANGULAR MİKTAR / AÇI	FORMULA / FORMÜL	QUANTITY ANGULAR MİKTAR / AÇI	FORMULA / FORMÜL	QUANTITY ANGULAR MİKTAR / AÇI	FORMULA / FORMÜL
6 + 6	8A	77BF-101-18 77BF-101-18 + 77BF-401-18	77BF-101-18	2 45°	FL	2 45°	FH	2 90°	FH-54	20 45°	SL1 = ((FL-238)/12)-7,6 SL1 = ((FL-290)/12)-7,6	4 45°	SL2=SL1+51	24 45°	SH = FH-92	1 90°	FL-54 FL-106	20 90°	SL1-12	4 90°/45°	SL2+8	-	-	2 90° / 45°	SH+14	2 90° / 45°	SH+7	1 90°	SH+6	1 90°	SH-14	-	-	-	-
7 + 5	6A	77BF-101-18	77BF-101-18	2 45°	FL	2 45°	FH	2 90°	SH - 54	24 45°	SL1 = (FL-210)/12 SL1 = (FL-238)/12 SL1 = (FL-262)/12 SL1 = (FL-290)/12	-	-	24 45°	SH = FH-92	1 90°	FL-54 FL-106	24 90° 20 90° 24 90° 20 90°	SL1-12	-	-	- 4 90° / 45° - 4 90° / 45°	- SL1+8 - SL1+8	- 2 90° / 45° - 2 90° / 45°	- SH+14 - SH+14	- 2 90° / 45° - 2 90° / 45°	- SH+7 - SH+7	1 90°	SH+6	1 90°	SH-14	- 2 90° - 2 90°	- SH+1 - SH+1	-	-
	6B & 6C	77BF-101-18																																	
	6A*	77BF-101-18 + 77BF-401-18																																	
	6B & 6C	77BF-101-18 + 77BF-401-18																																	
7 + 6	7A	77BF-101-18	77BF-101-18	2 45°	FL	2 45°	FH	2 90°	SH - 54	24 45°	SL1 = ((FL-236)/13)-3,5 SL1 = ((FL-250)/13)-3,5 SL1 = ((FL-288)/13)-3,5 SL1 = ((FL-302)/13)-3,5	2 45°	SL2=SL1+51	26 45°	SH = FH-92	1 90°	FL-54 FL-106	24 90° 22 90° 24 90° 22 90°	SL1-12	2 90°/45°	SL2+8	- 2 90° / 45° - 2 90° / 45°	- SL1+8 - SL1+8	1 90° / 45° 2 90° / 45° 1 90° / 45° 2 90° / 45°	SH+14	1 90° / 45° 2 90° / 45° 1 90° / 45° 2 90° / 45°	SH+7	1 90°	SH+6	1 90°	SH-14	- 1 90° - 1 90°	- SH+1 - SH+1	- 1 90° - 1 90°	- SH-280 - SH-280
	7A*	77BF-101-18 + 77BF-401-18																																	
	7B & 7C	77BF-101-18 + 77BF-401-18																																	
7 + 7	6A	77BF-101-18	77BF-101-18	2 45°	FL	2 45°	FH	2 90°	SH - 54	28 45°	SL1 = (FL-234)/14 SL1 = (FL-262)/14 SL1 = (FL-286)/14 SL1 = (FL-314)/14	-	-	28 45°	SH = FH-92	1 90°	FL-54 FL-106	28 90° 24 90° 28 90° 24 90°	SL1-12	-	-	- 4 90° / 45° - 4 90° / 45°	- SL1+8 - SL1+8	- 2 90° / 45° - 2 90° / 45°	- SH+14 - SH+14	- 2 90° / 45° - 2 90° / 45°	- SH+7 - SH+7	1 90°	SH+6	1 90°	SH-14	- 2 90° - 2 90°	- SH+1 - SH+1	-	-
	6B & 6C	77BF-101-18																																	
	6A*	77BF-101-18 + 77BF-401-18																																	
	6B & 6C	77BF-101-18 + 77BF-401-18																																	

INDEX
İndeks

Frame Assembly | Kasa Uygulaması	124 - 131
Frame Drainage | Kasa Tahliye	132 - 137
Sash Drainage | Kanat Tahliye	138
Glazing Support Method | Cam Takozlama Metodu	139
Inward Opening Point Detail Assembly İçe Açılır Nokta Uygulama Detayları	140 - 153
Outward Opening Point Detail Assembly Dışa Açılır Nokta Uygulama Detayları	154 - 168

ASSEMBLY DETAILS
MONTAJ DETAYLARI

FRAME ASSEMBLY / KASA UYGULAMA

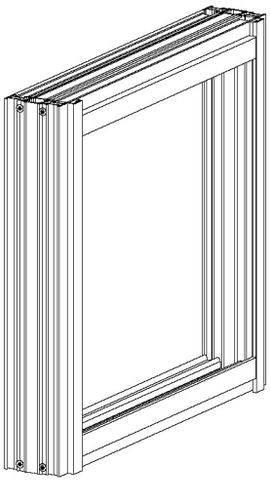

LOWER HORIZONTAL FRAME
ALT YATAY KASA

77BF-101-18

DETAIL / DETAY

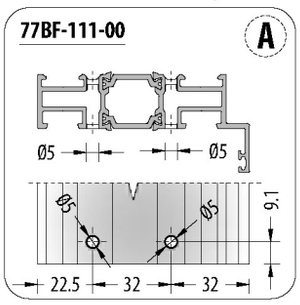

EM77BF-23
FRAME JOINT
INSULATION PLASTIC
KASA BİRLEŞİM
İZOLASYON PLASTİĞİ

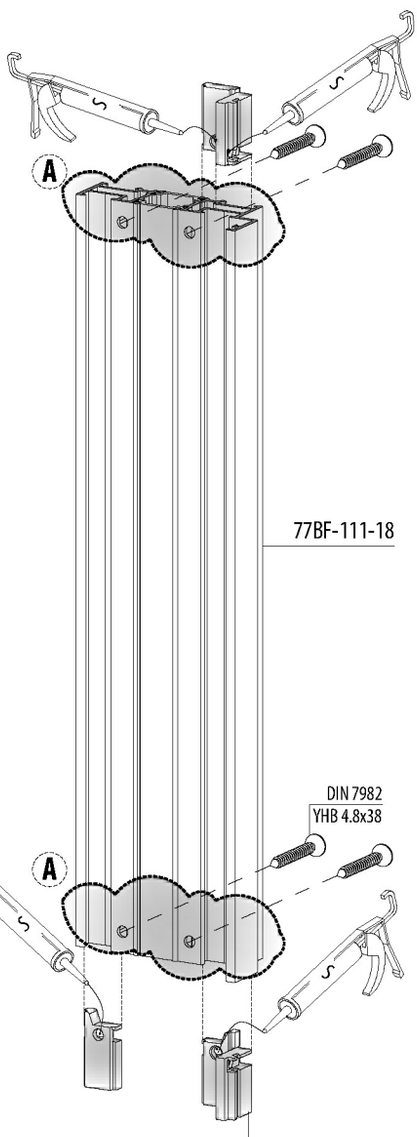

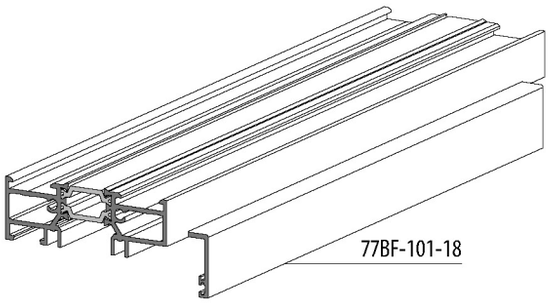

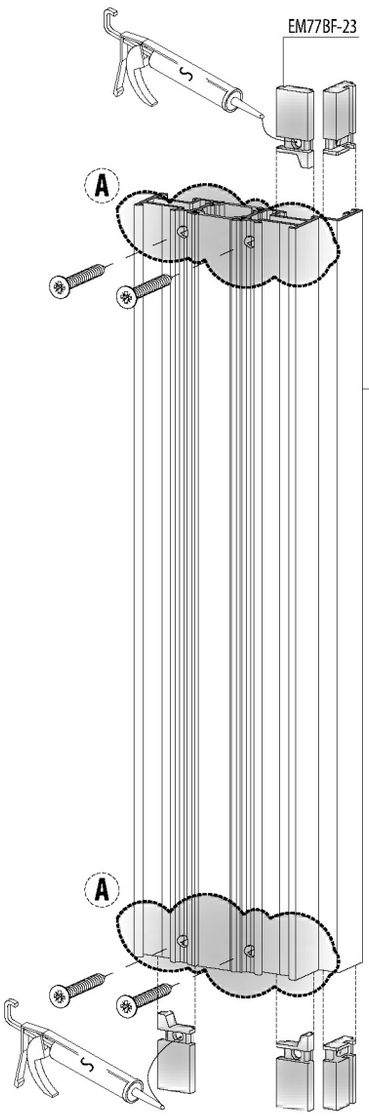

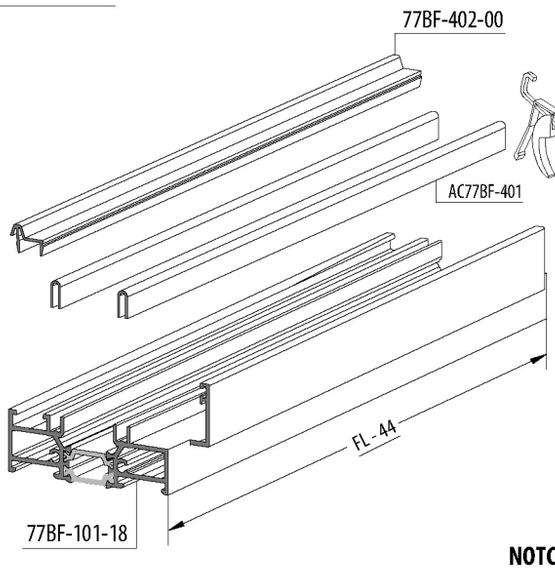

NOTCH / KERTME

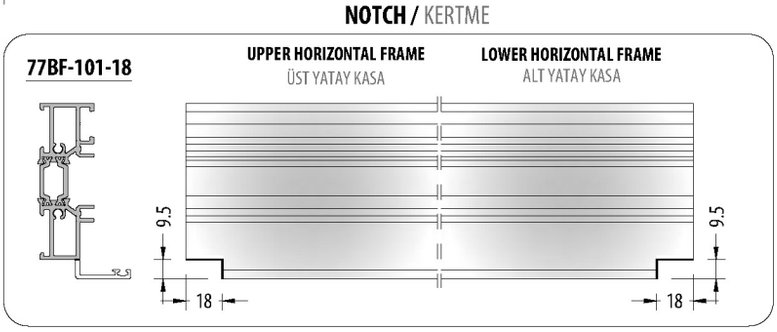

FRAME ASSEMBLY / KASA UYGULAMA

EM77BF-23
FRAME JOINT
INSULATION PLASTIC
KASA BİRLEŞİM
İZOLASYON PLASTİĞİ

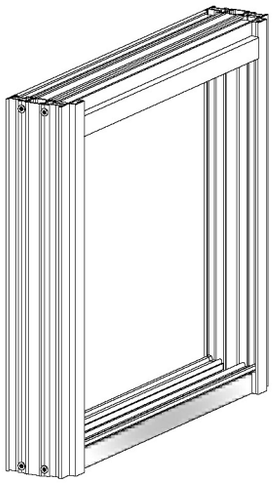

LOWER HORIZONTAL FRAME
ALT YATAY KASA

77BF-102-18

DETAIL / DETAY

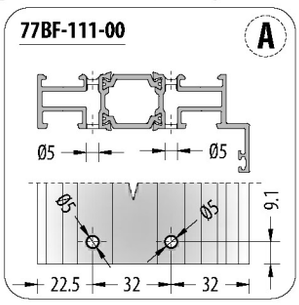

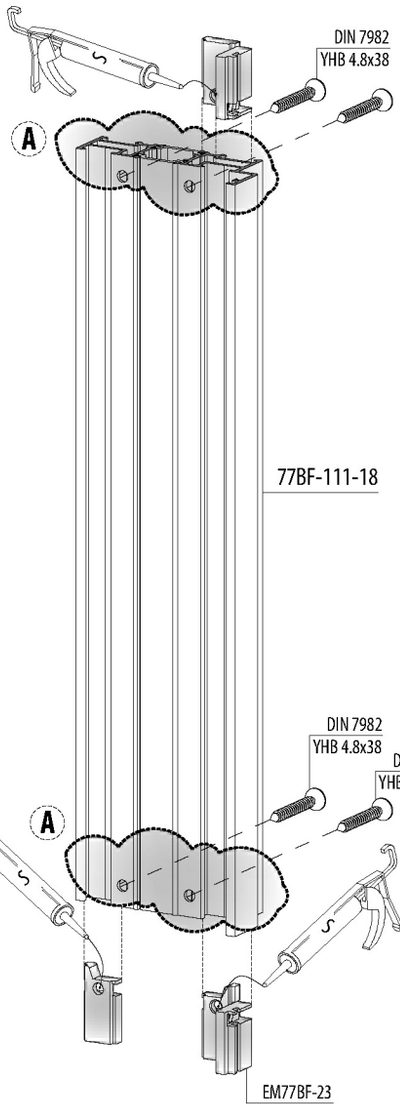

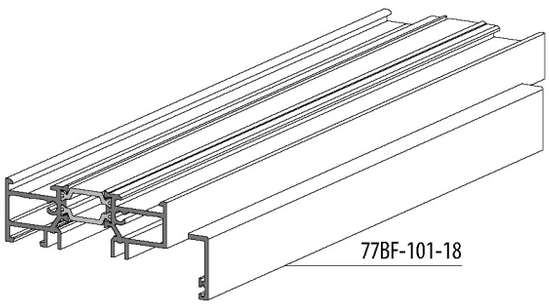

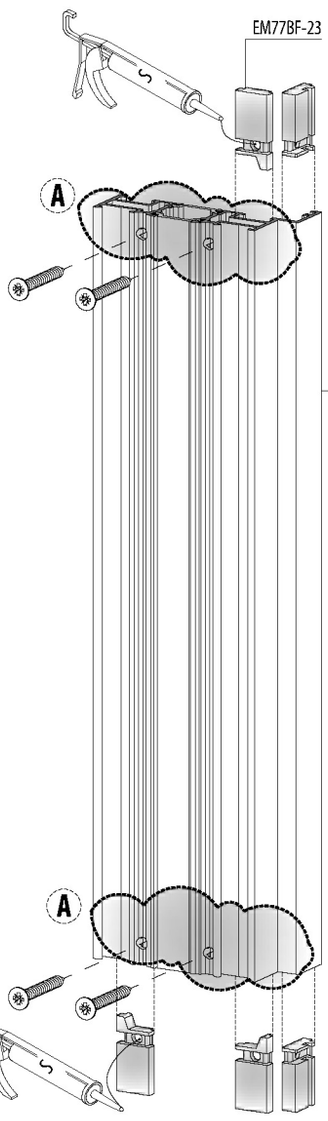

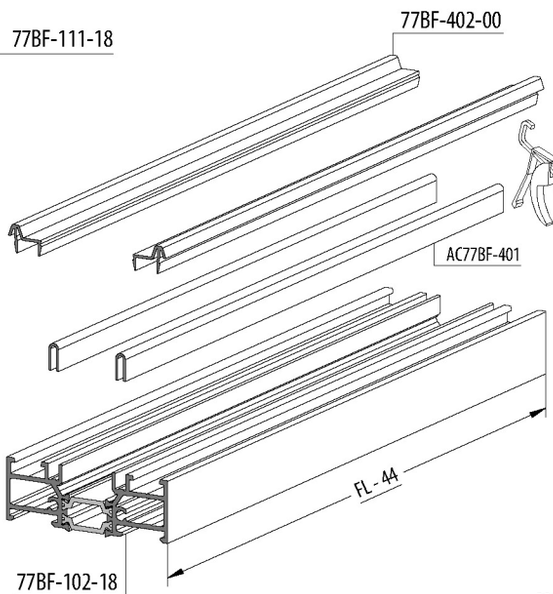

NOTCH / KERTME

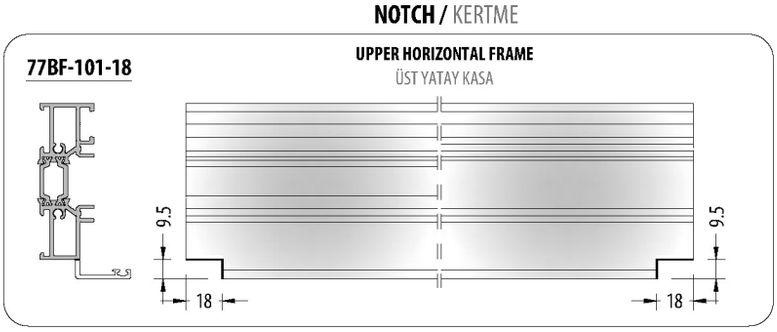

FRAME ASSEMBLY / KASA UYGULAMA

EM77BF-23
FRAME JOINT INSULATION PLASTIC
KASA BİRLEŞİM İZOLASYON PLASTİĞİ

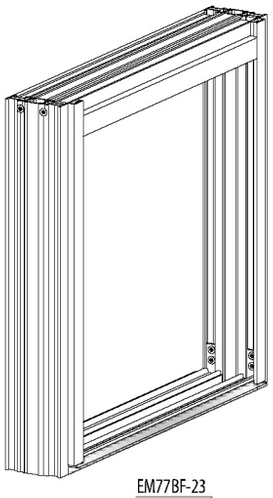

LOWER HORIZONTAL FRAME
ALT YATAY KASA

77BF-103-18

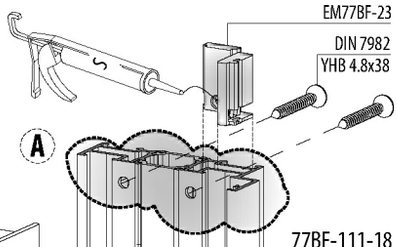

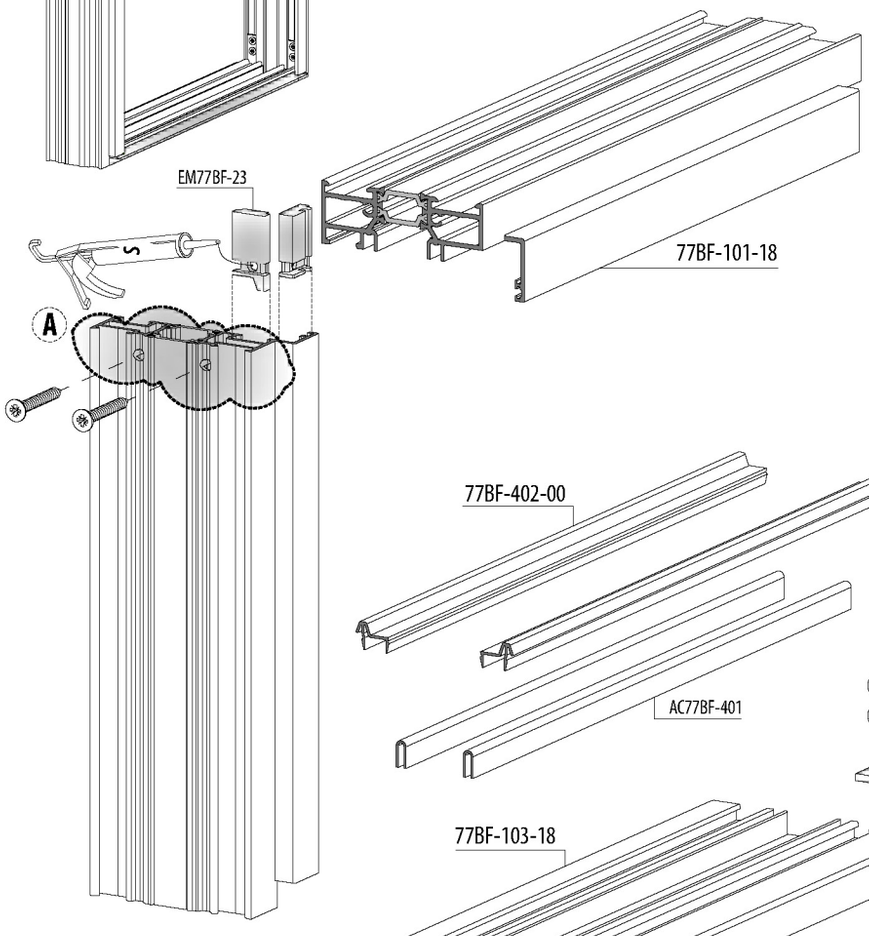

DETAIL / DETAY

77BF-111-00 A

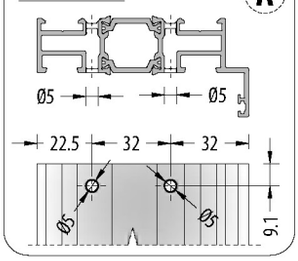

NOTCH / KERTME

77BF-111-00

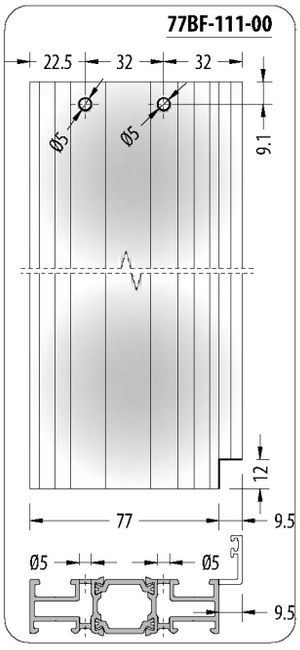

NOTCH / KERTME

77BF-101-18

UPPER HORIZONTAL FRAME
ÜST YATAY KASA

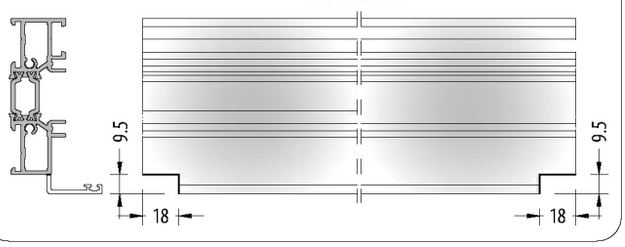

77BF-103-00

LOWER HORIZONTAL XXXX
ALT YATAY XXX

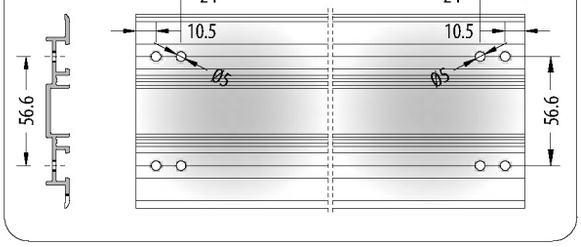

ADJUSTMENT ADAPTER PROFILE / AYAR ADAPTÖR PROFİLİ

77BF-401-18

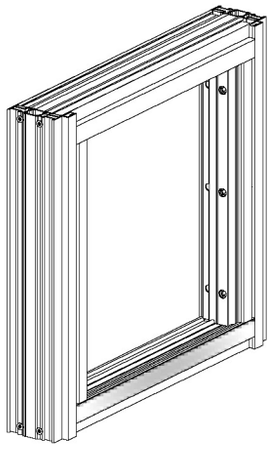

LOWER HORIZONTAL FRAME
ALT YATAY KASA

77BF-101-18

EM77BF-23
FRAME JOINT INSULATION PLASTIC
KASA BİRLEŞİM İZOLASYON PLASTİĞİ



AC77BF-411
FRAME ADJUSTING PLATE
KASA AYAR PARÇASI



AC77BF-412
SET SCREW
SETSKUR



NOTCH / KERTME

77BF-401-18

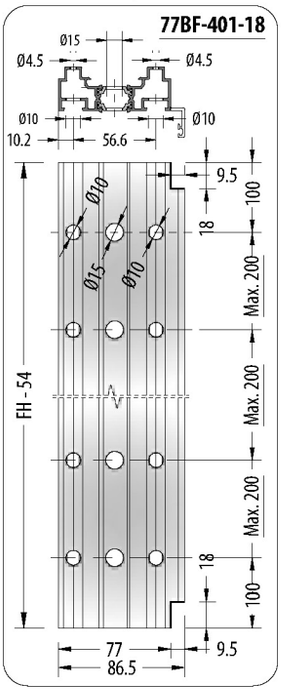

Attention
Dikkat !...

DETAIL / DETAY

77BF-111-00 **A**

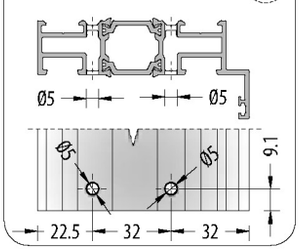

NOTCH / KERTME

77BF-101-18

UPPER HORIZONTAL FRAME
ÜST YATAY KASA

LOWER HORIZONTAL FRAME
ALT YATAY KASA

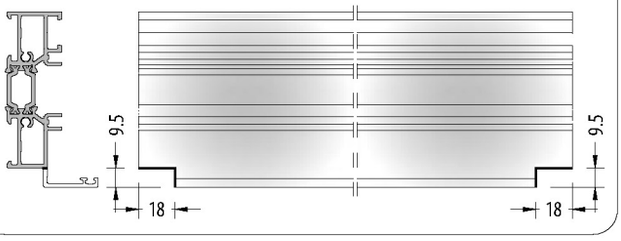

ADJUSTMENT ADAPTER PROFILE / AYAR ADAPTÖR PROFİLİ

77BF-401-18

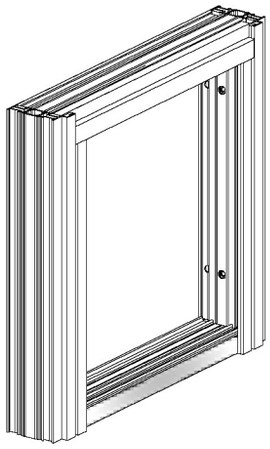

LOWER HORIZONTAL FRAME
ALT YATAY KASA

77BF-102-18

EM77BF-23
FRAME JOINT INSULATION PLASTIC
KASA BİRLEŞİM İZOLASYON PLASTİĞİ



AC77BF-411
FRAME ADJUSTING PLATE
KASA AYAR PARÇASI



AC77BF-412
SET SCREW
SETSKUR



NOTCH / KERTME

77BF-401-18

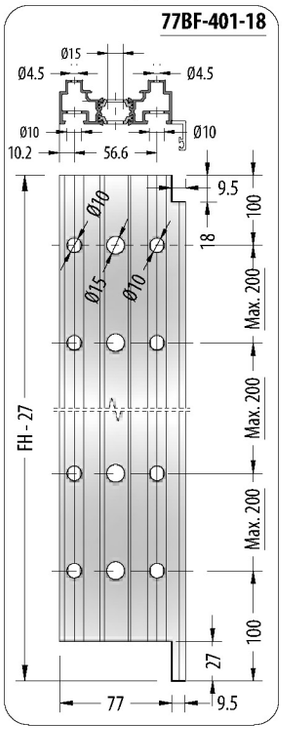

DETAIL / DETAY

77BF-111-00 **A**

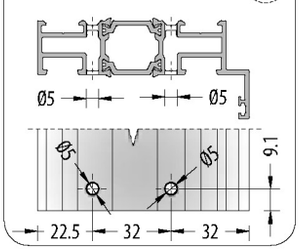

NOTCH / KERTME

77BF-101-18

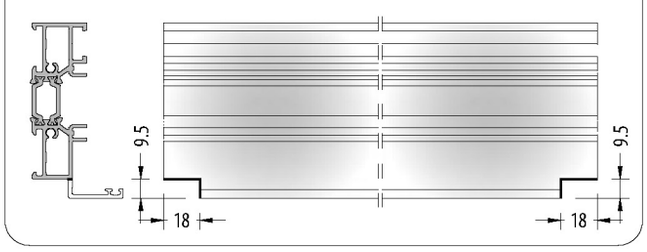

ADJUSTMENT ADAPTER PROFILE / AYAR ADAPTÖR PROFİLİ

77BF-401-18

LOWER HORIZONTAL FRAME
ALT YATAY KASA

77BF-103-00

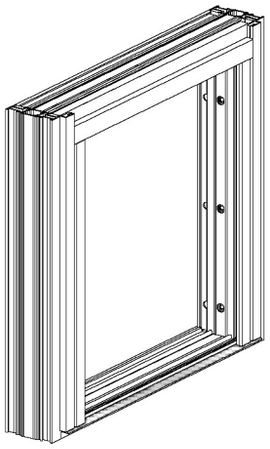

EM77BF-23
FRAME JOINT INSULATION PLASTIC
KASA BİRLEŞİM İZOLASYON PLASTİĞİ

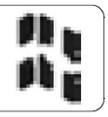

AC77BF-411
FRAME ADJUSTING PLATE
KASA AYAR PARÇASI

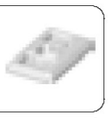

AC77BF-412
SET SCREW
SETSKUR



CA77BF-103
FRAME CORNER JOINT
KASA KÖŞE BAĞLANTI



NOTCH / KERTME

77BF-111-00

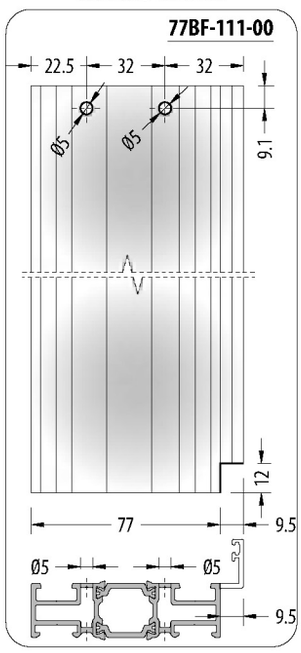

NOTCH / KERTME

77BF-401-18

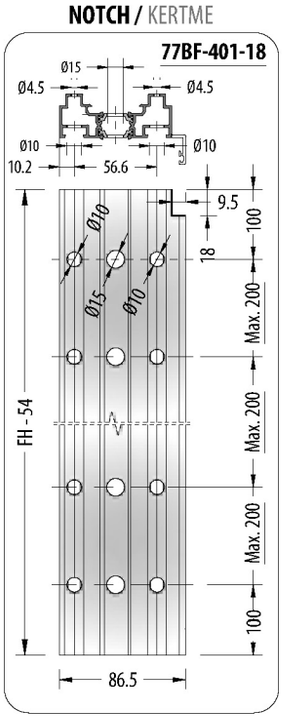

77BF-103-00 LOWER HORIZONTAL XXXX
ALT YATAY XXX

Attention
Dikkat !...

DETAIL / DETAY

77BF-111-00 (A)

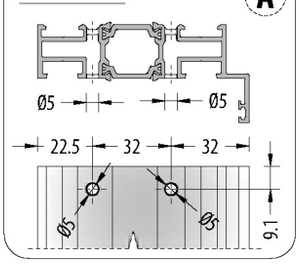

NOTCH / KERTME

77BF-101-18

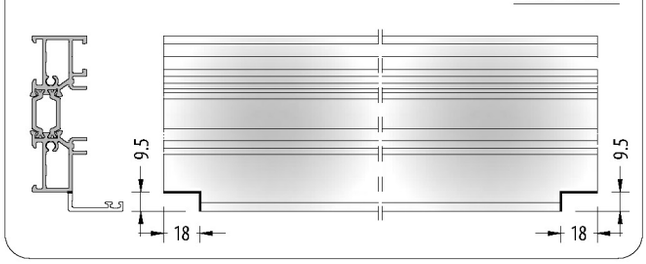

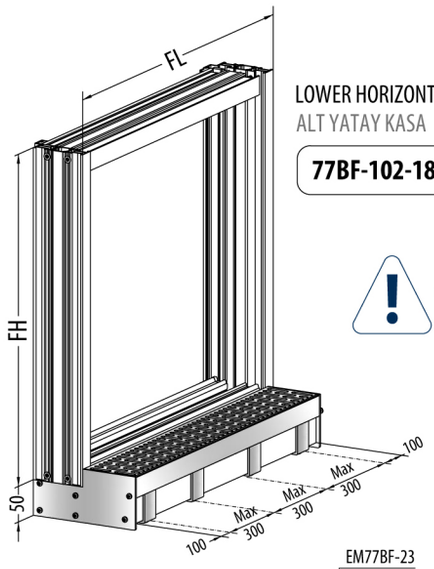

LOWER HORIZONTAL FRAME
ALT YATAY KASA

77BF-102-18 / 77BF-151-18

FRAME ASSEMBLY / KASA UYGULAMA

INWARD OPENING / İÇE AÇILIR

EM77BF-23
FRAME JOINT INSULATION PLASTIC
KASA BİRLEŞİM İZOLASYON PLASTİĞİ



Attention
Dikkat !...

For frame manufacturing height (FH); You can do all manufacturing using general formulas by dropping 50 mm (gutter height) from the installation height.
Kasa imalat yüksekliği (FH) için; montaj yerinin yüksekliğinden 50 mm düşerek (oluk yüksekliği) tüm imalatları genel formüllerden yapabilirsiniz.

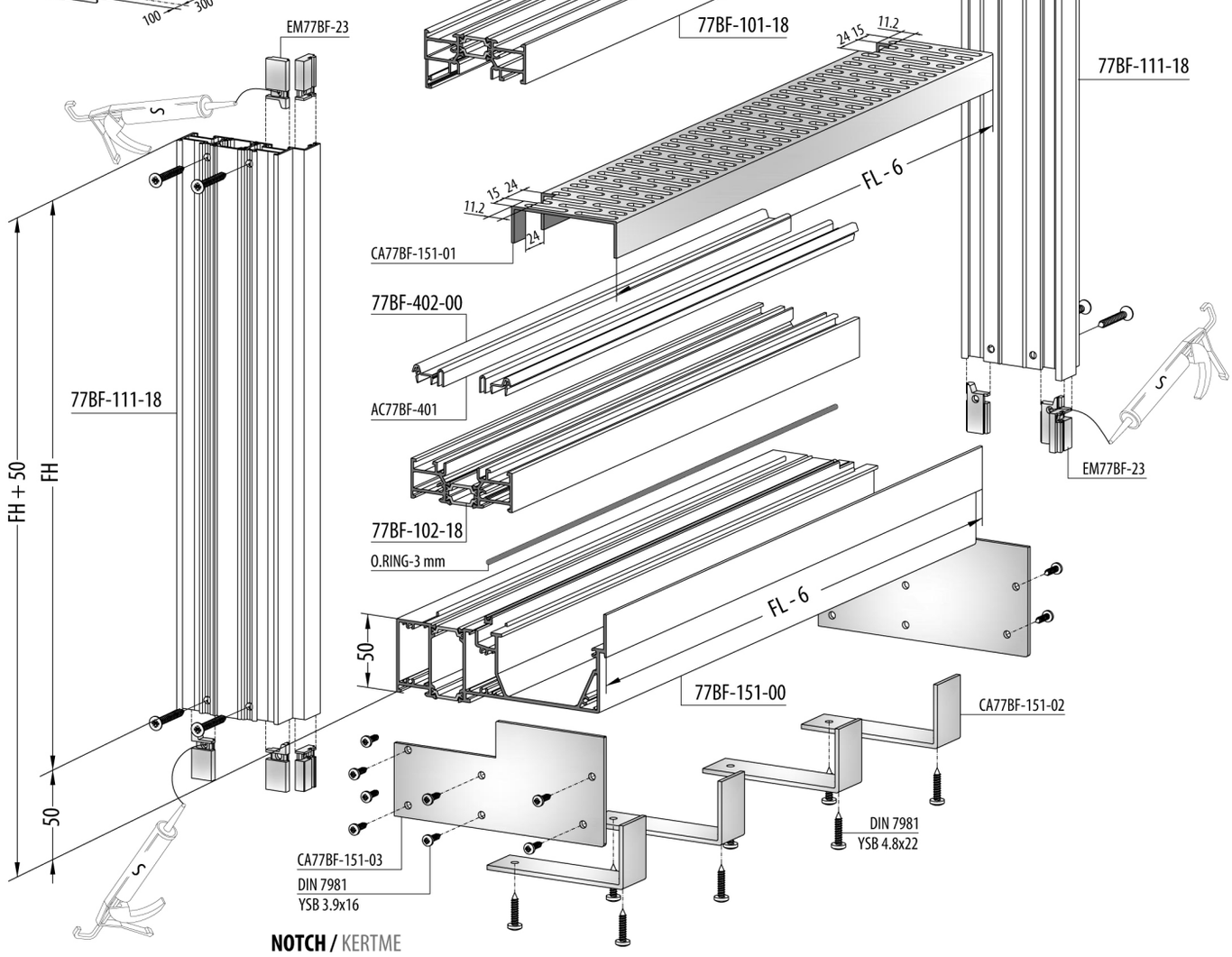

NOTCH / KERTME

77BF-101-18
UPPER HORIZONTAL FRAME
ÜST YATAY KASA

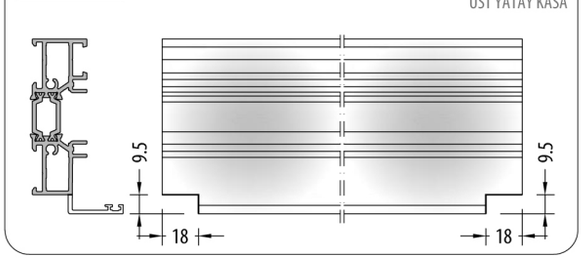

77BF-151-00
LOWER HORIZONTAL FRAME
ALT YATAY KASA

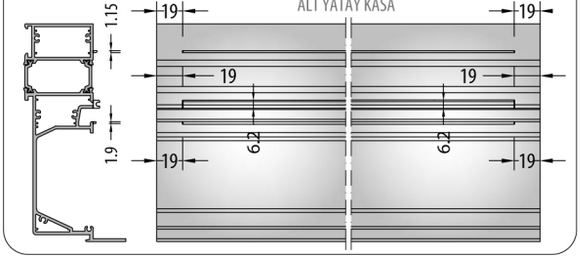

FRAME ASSEMBLY / KASA UYGULAMA

OUTWARD OPENING / DIŞA AÇILIR

LOWER HORIZONTAL FRAME
ALT YATAY KASA

77BF-102-18 / 77BF-151-18

EM77BF-23
FRAME JOINT INSULATION PLASTIC
KASA BİRLEŞİM İZOLASYON PLASTİĞİ

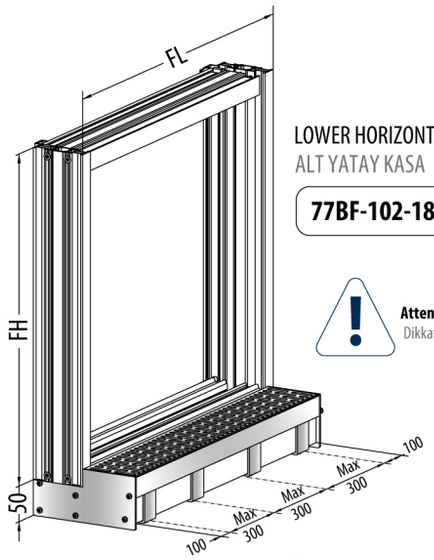

Attention
Dikkat !...

For frame manufacturing height (FH); You can do all manufacturing using general formulas by dropping 50 mm (gutter height) from the installation height.
Kasa imalat yüksekliği (FH) için; montaj yerinin yüksekliğinden 50 mm düşerek (oluk yüksekliği) tüm imalatları genel formüllerden yapabilirsiniz.

NOTCH / KERTME

77BF-101-18 — **UPPER HORIZONTAL FRAME** / ÜST YATAY KASA

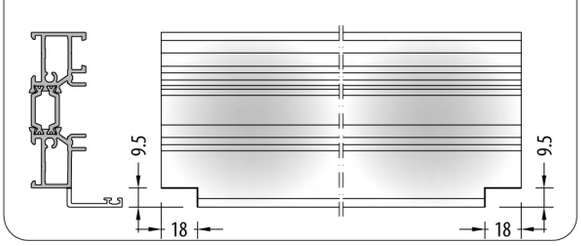

77BF-151-00 — **LOWER HORIZONTAL FRAME** / ALT YATAY KASA

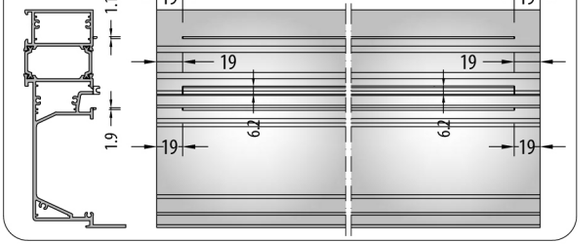

FRAME WATER DRANAIGE / KASA TAHLİYE | **77BF-101-18**

INWARD OPENING / İÇE AÇILIR

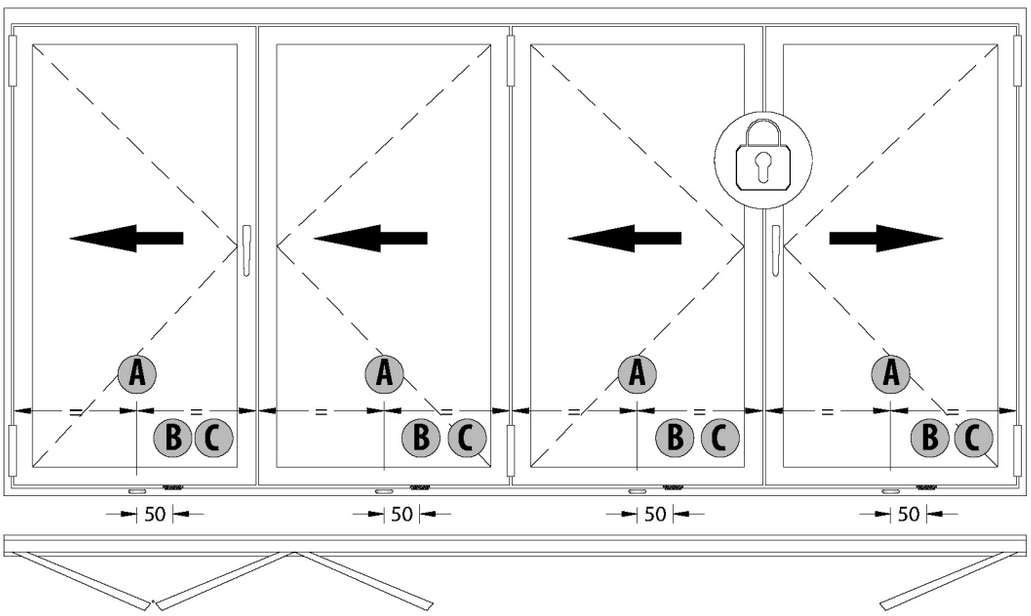

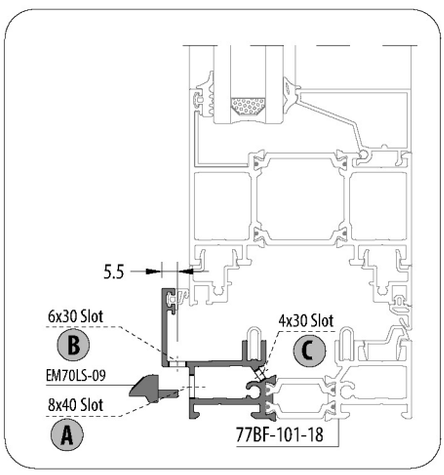

FRAME WATER DRANAIGE / KASA TAHLİYE | **77BF-101-18**

OUTWARD OPENING / DIŞA AÇILIR

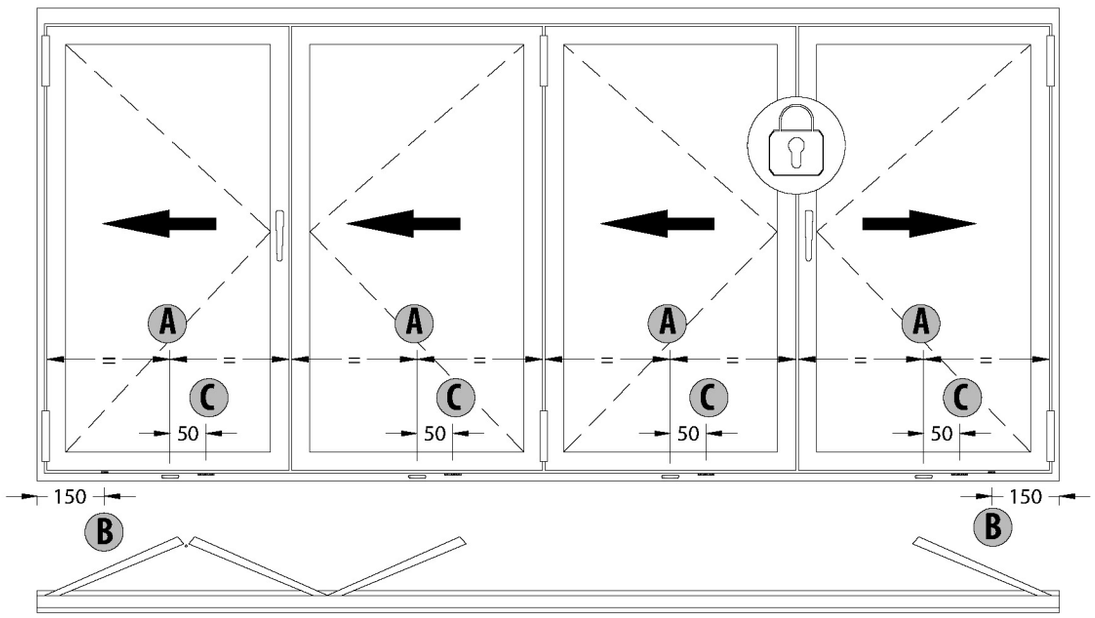

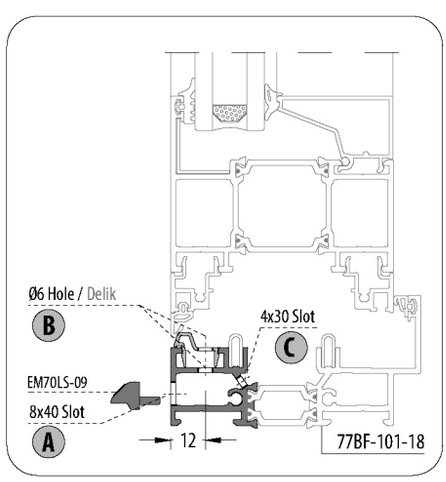

FRAME WATER DRANAIGE / KASA TAHLİYE | **77BF-102-18**

INWARD OPENING / İÇE AÇILIR

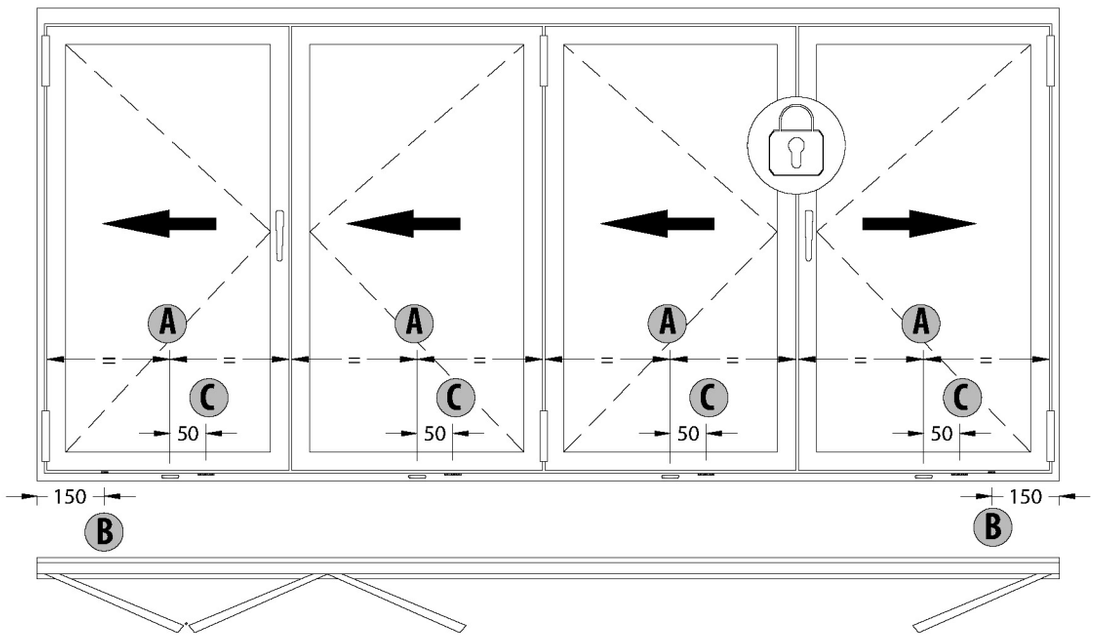

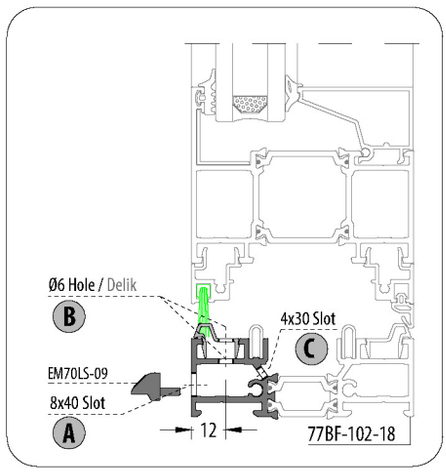

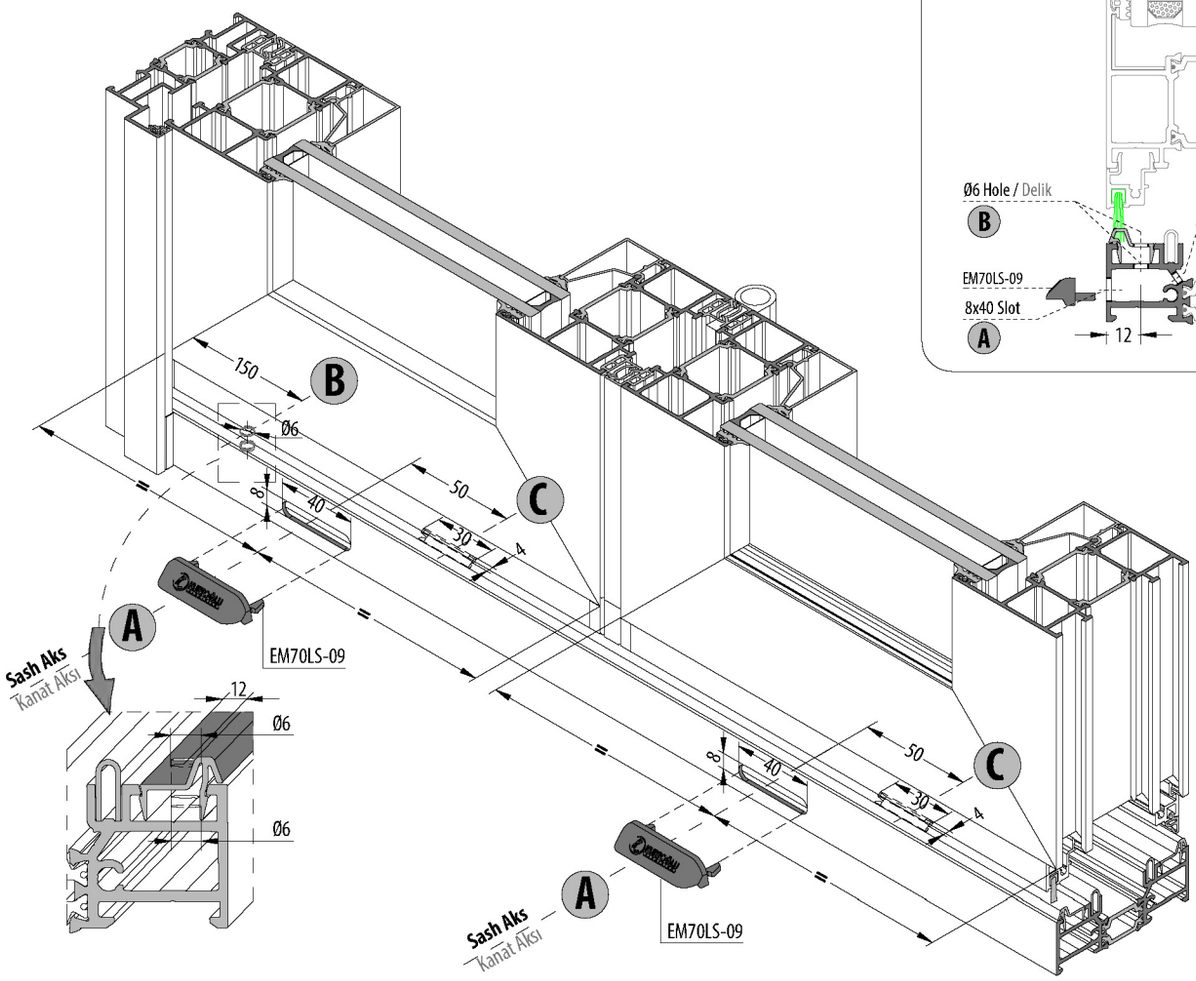

FRAME WATER DRANAIGE / KASA TAHLİYE | **77BF-102-18**

OUTWARD OPENING / DIŞA AÇILIR

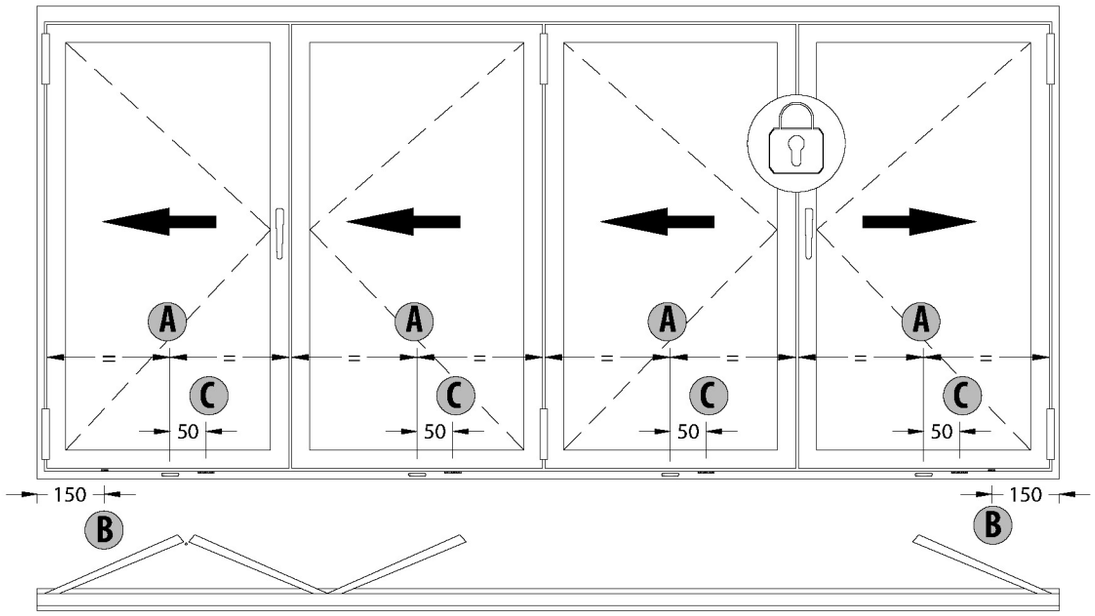

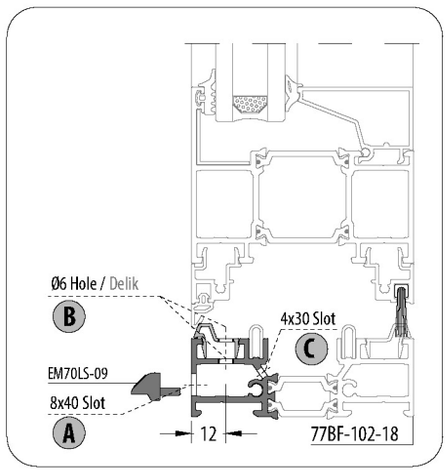

FRAME WATER DRANAIGE / KASA TAHLİYE | **77BF-102-18 / 77BF-151-18**

INWARD OPENING / İÇE AÇILIR

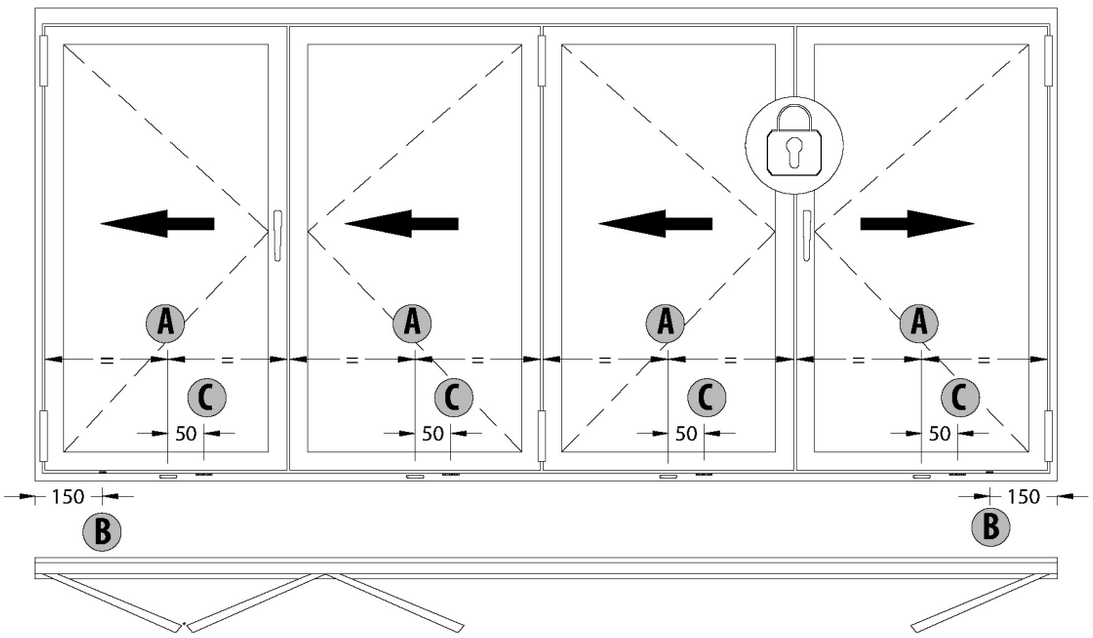

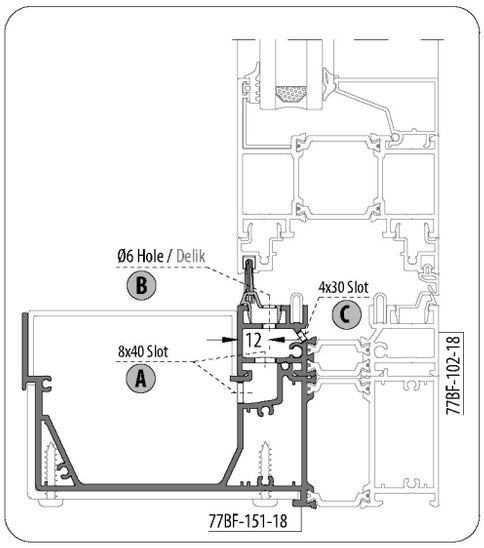

FRAME WATER DRANAIGE / KASA TAHLİYE

77BF-102-18 / 77BF-151-18

OUTWARD OPENING / DIŞA AÇILIR

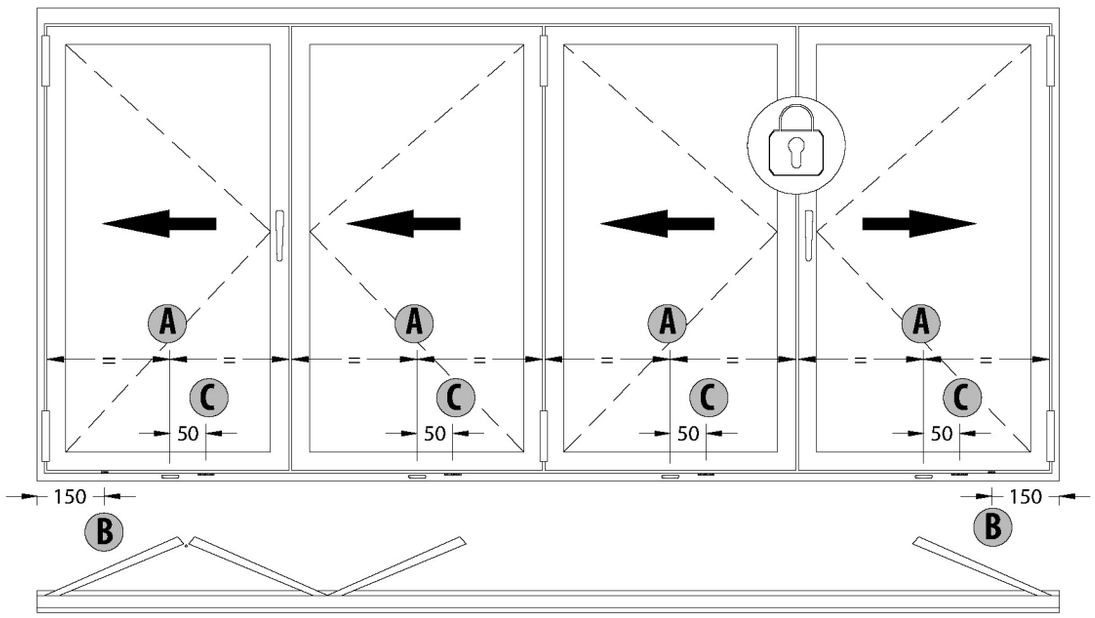

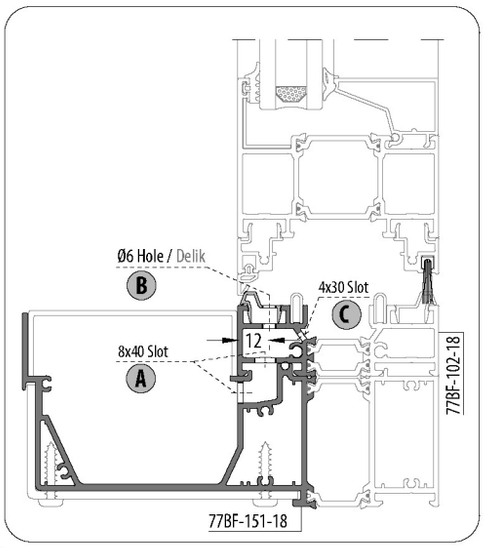

SASH WATER DRANAIGE / KANAT TAHLİYE

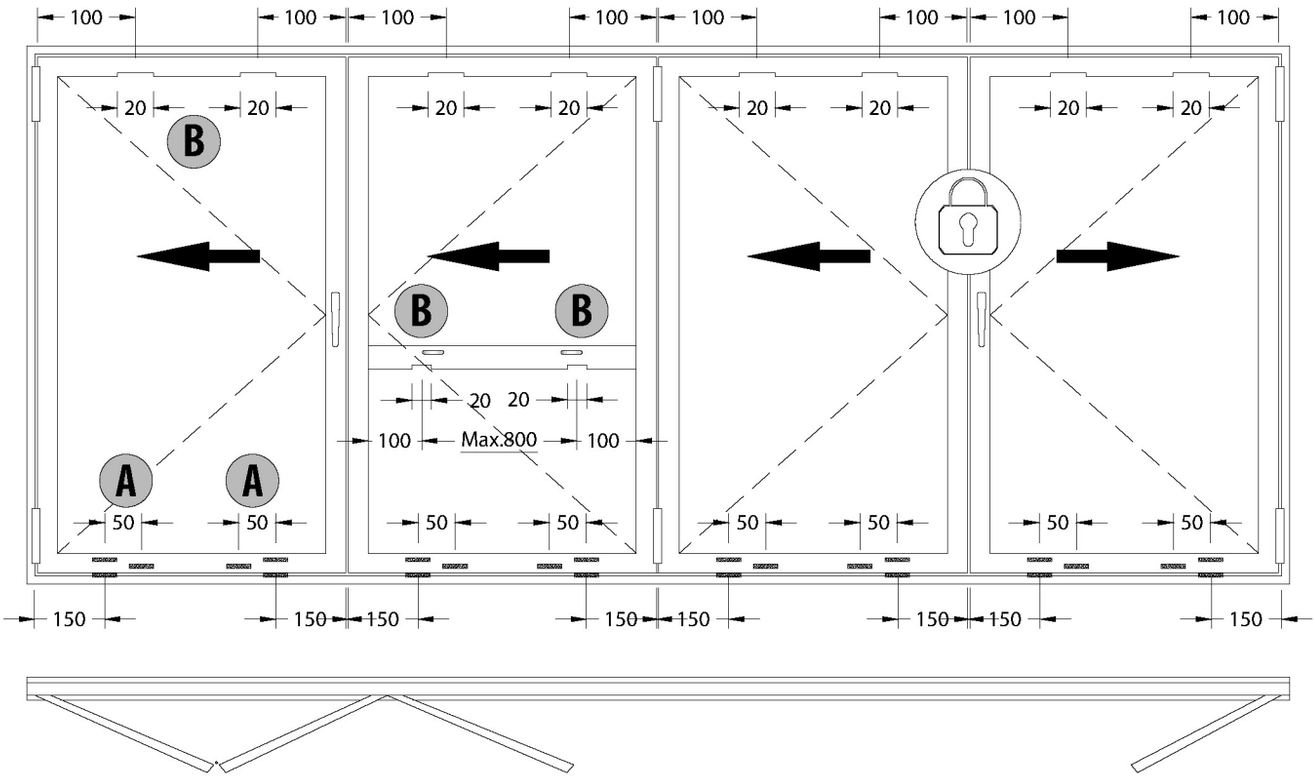

A **SASH WATER DRANAIGE /** KANAT TAHLİYE

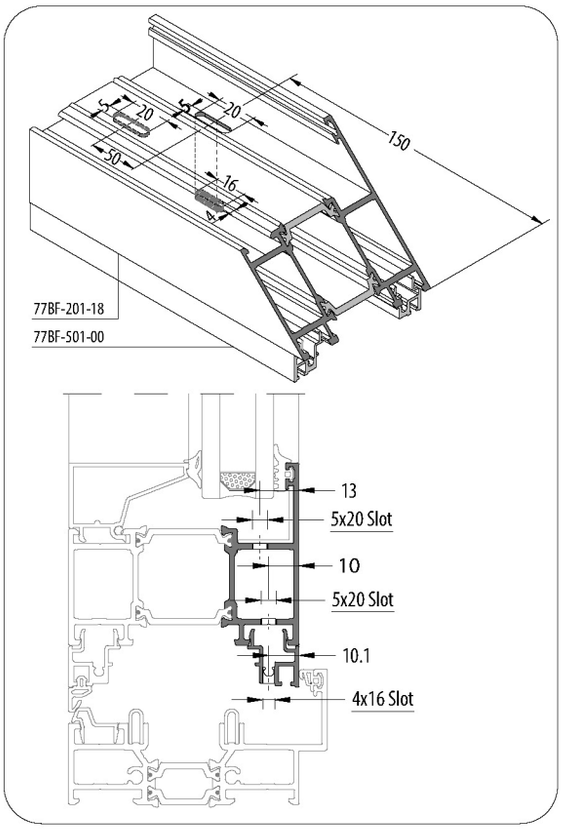

B **PRESSURE EQUALIZER /** BASINÇ DENGELEYİCİ

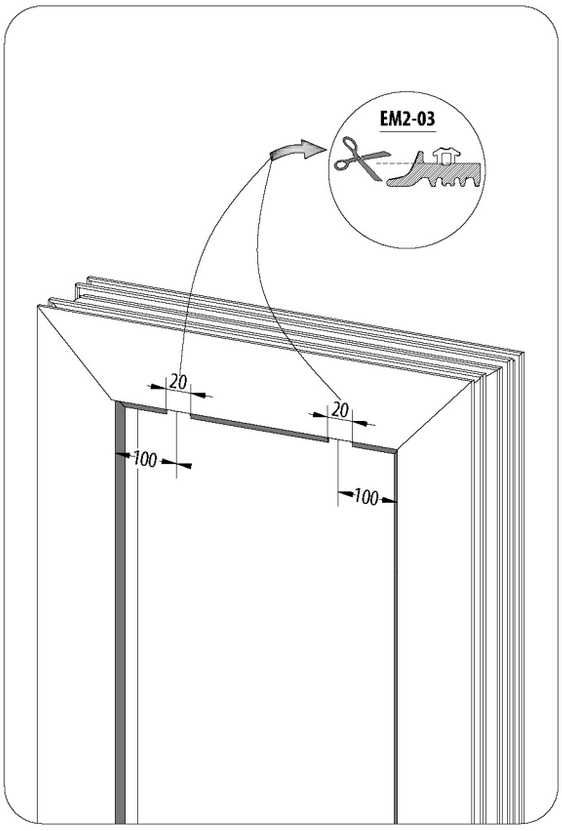

GLAZING SUPPORT METHOD / CAM TAKOZLAMA METODU

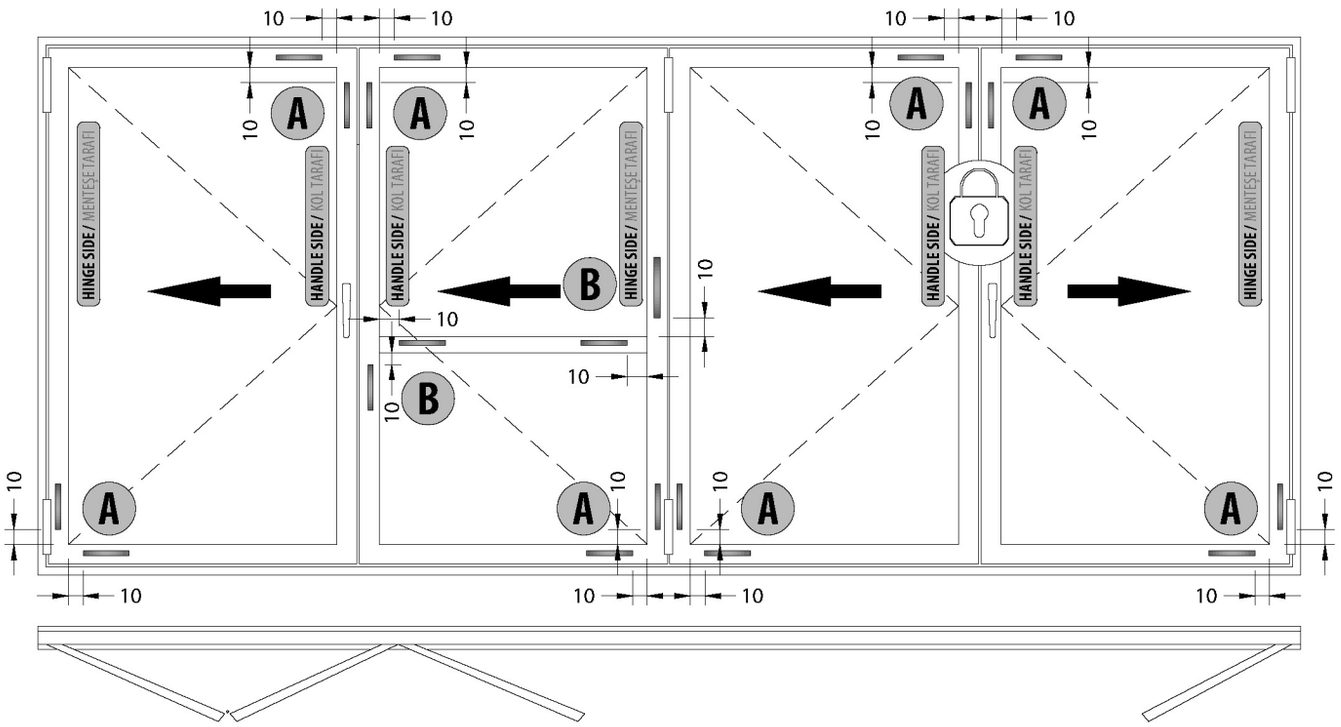

A SECTION / KESİTİ

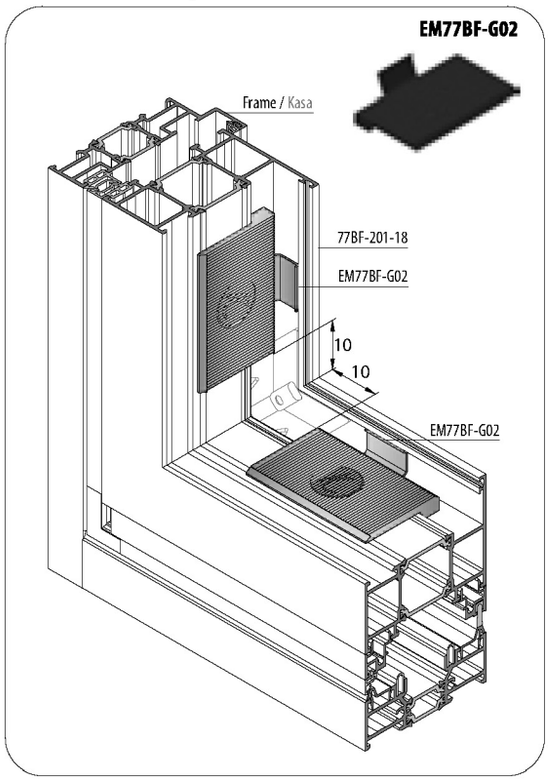

B SECTION / KESİTİ

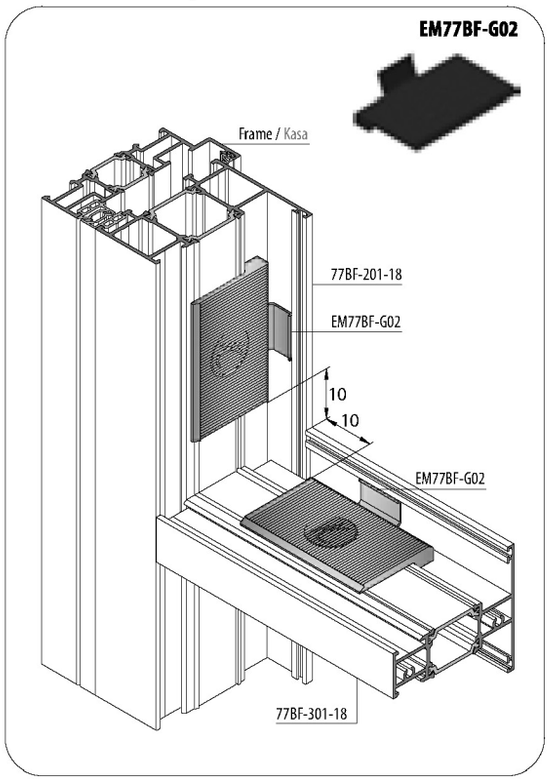

01-A **POINT DETAIL** / NOKTA DETAYI

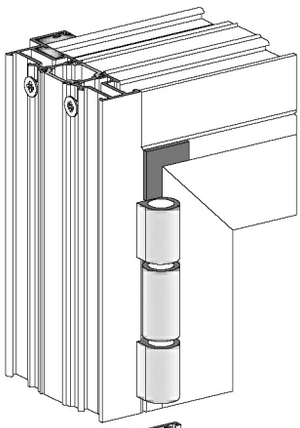

DETAIL / DETAY

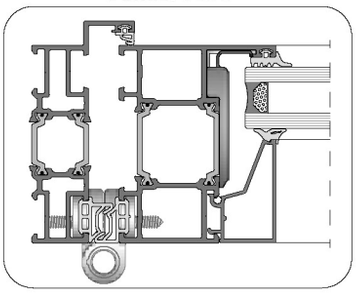

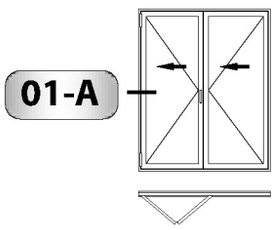

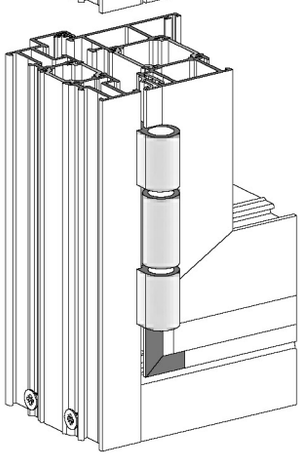

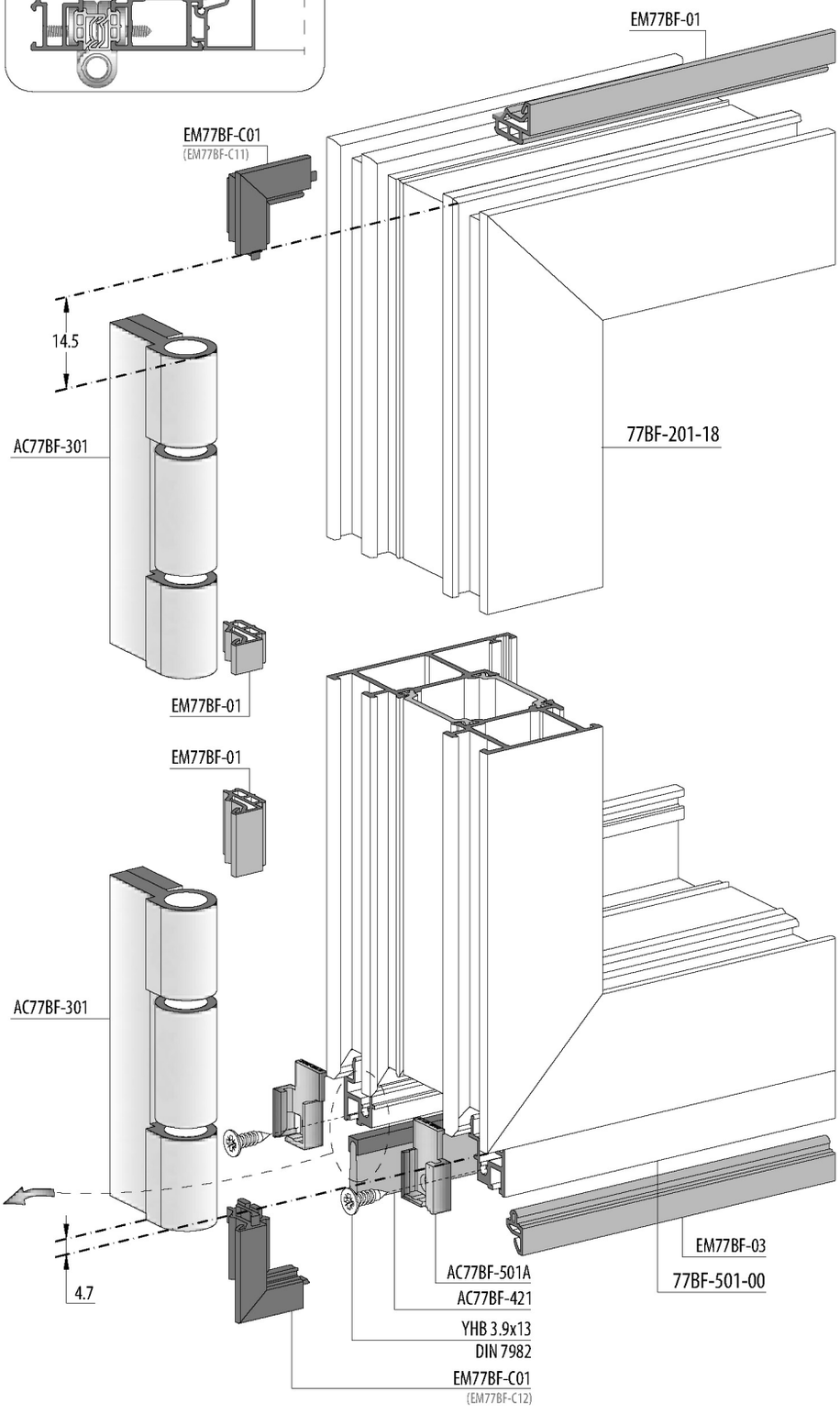



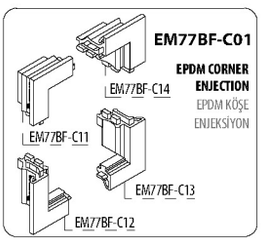

Attention
Dikkat !...

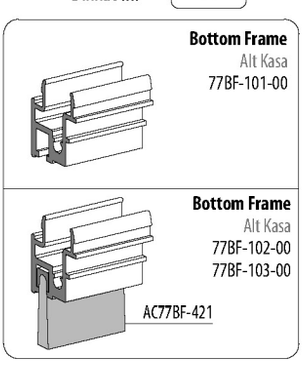

01-A* POINT DETAIL / NOKTA DETAYI

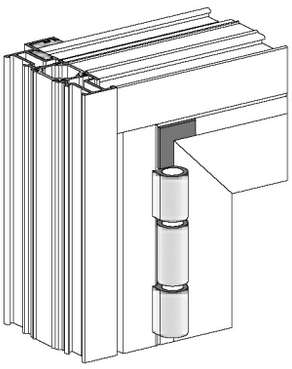

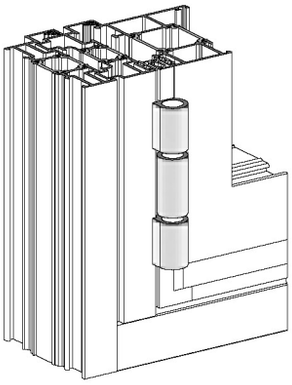

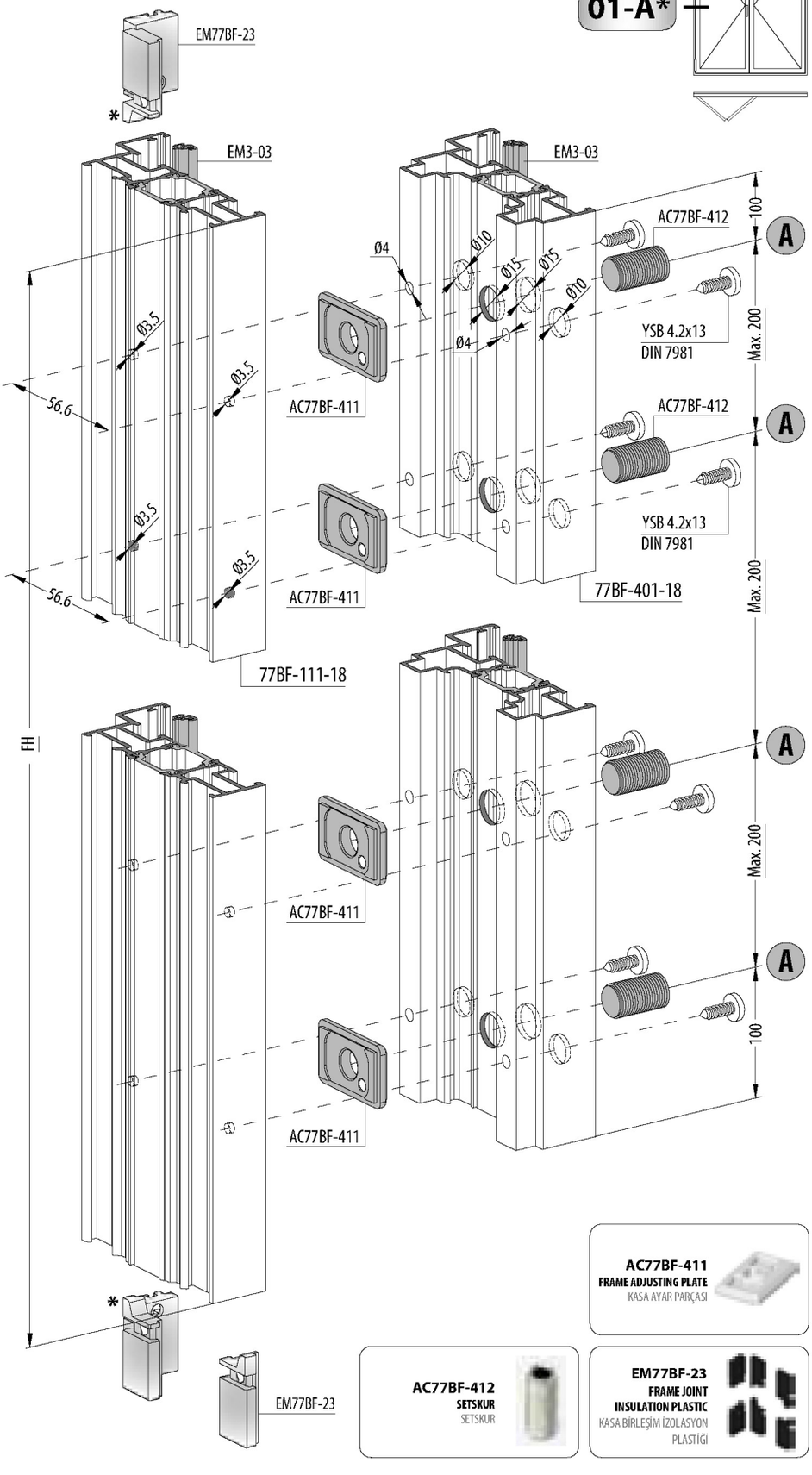

Attention
Dikkat !...



EM77BF-23
MUST BE CUT
KESİLMELİ

A
DETAIL / DETAY

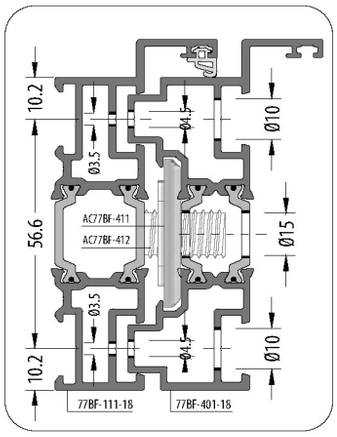

AC77BF-411
FRAME ADJUSTING PLATE
KASA AYAR PARÇASI

AC77BF-412
SETSKUR
SETSKUR

EM77BF-23
FRAME JOINT INSULATION PLASTIC
KASA BİRLEŞİM İZOLASYON PLASTİĞİ

02-A POINT DETAIL / NOKTA DETAYI

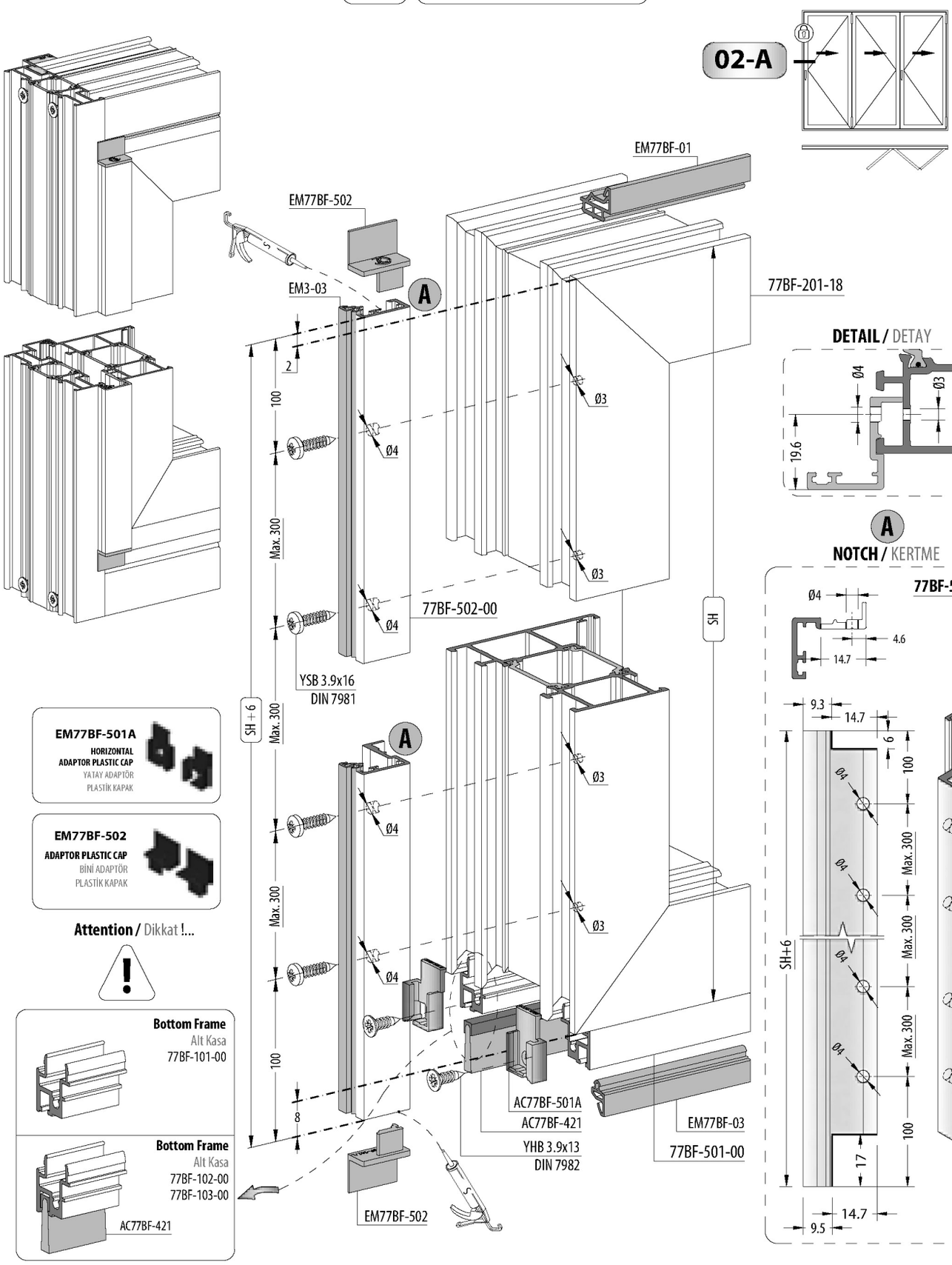

02-B **POINT DETAIL** / NOKTA DETAYI

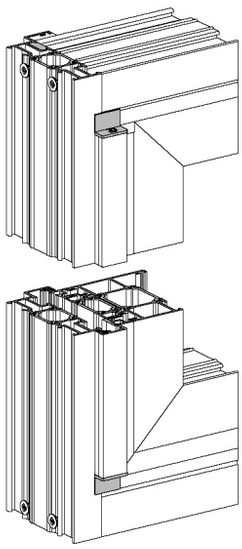

DETAIL / DETAY

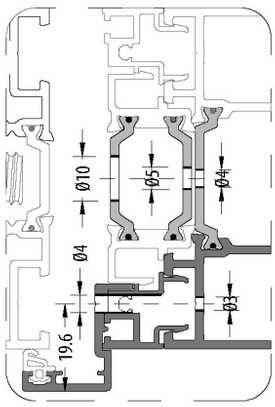

02-B

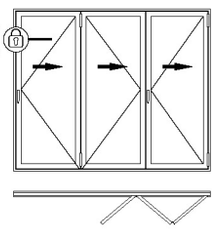

A
NOTCH / KERTME

77BF-502-00

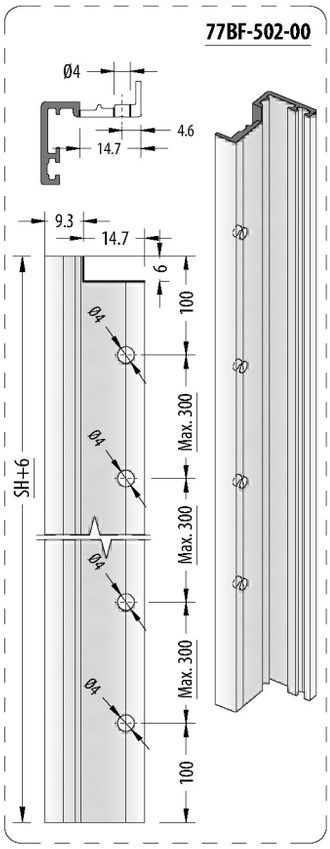

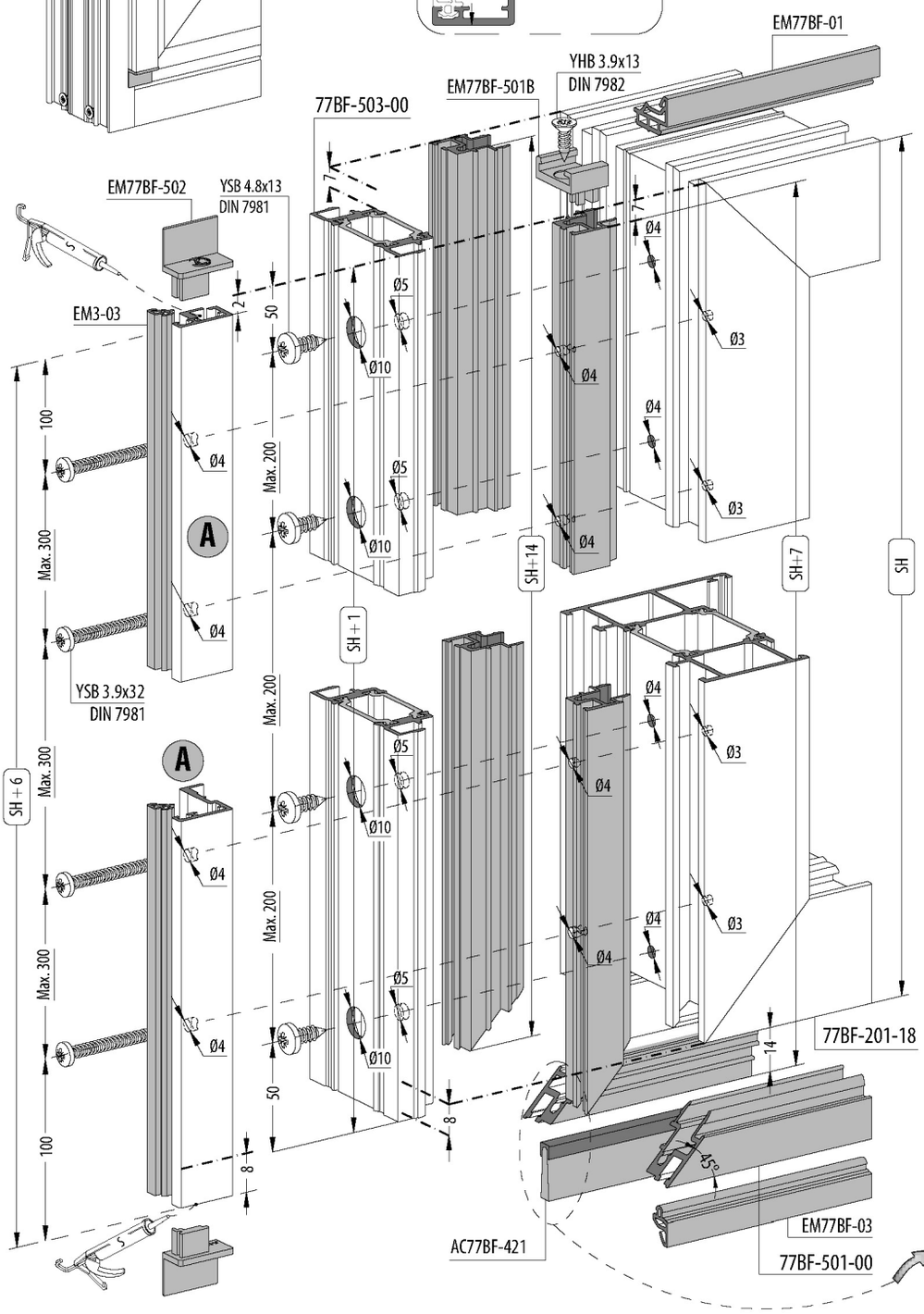

EM77BF-502
ADAPTOR PLASTIC CAP
BİNİ ADAPTÖR PLASTİK KAPAK



EM77BF-501B
VERTICAL ADAPTOR PLASTIC CAP
DÜŞEY ADAPTÖR PLASTİK KAPAK



Attention
Dikkat !...



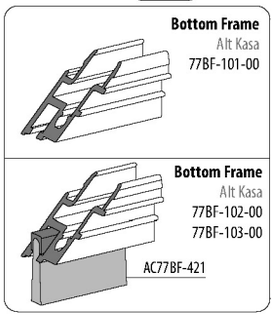

03-A POINT DETAIL / NOKTA DETAYI

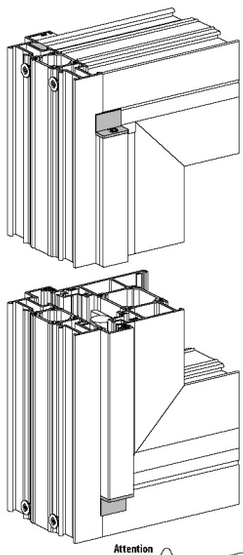

DETAIL / DETAY

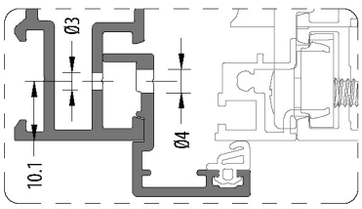

EM77BF-502
ADAPTOR PLASTIC CAP
BİNİ ADAPTÖR PLASTİK KAPAK

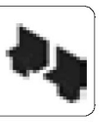

EM77BF-501B
VERTICAL ADAPTOR PLASTIC CAP
DÜŞEY ADAPTÖR PLASTİK KAPAK



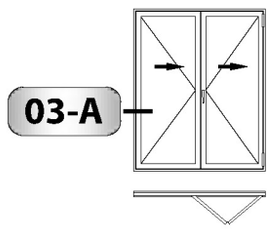

A
NOTCH / KERMTE

77BF-501-00

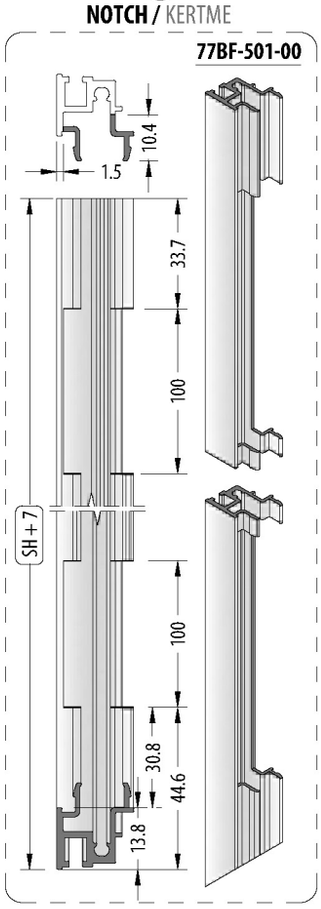

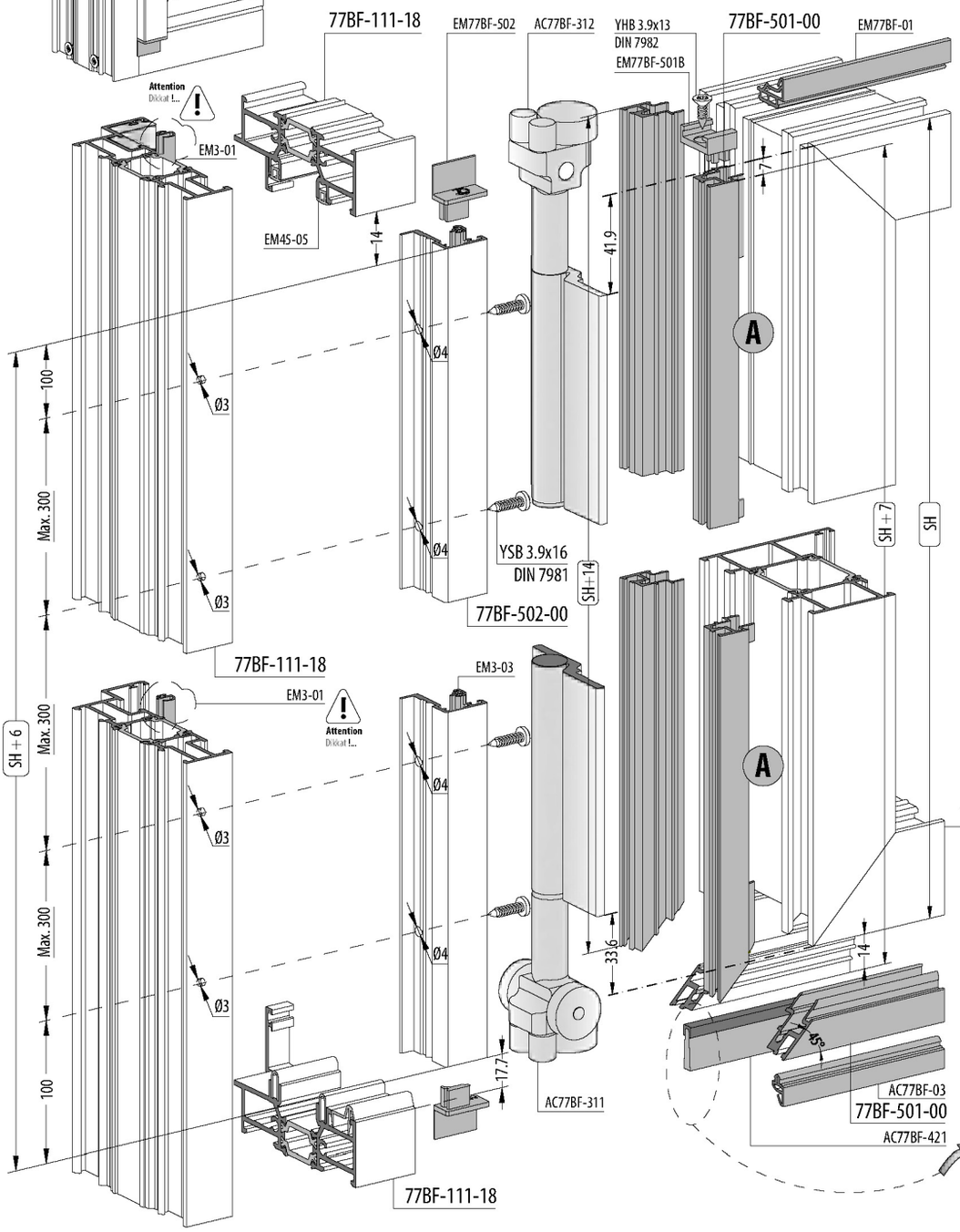

Attention / Dikkat !...



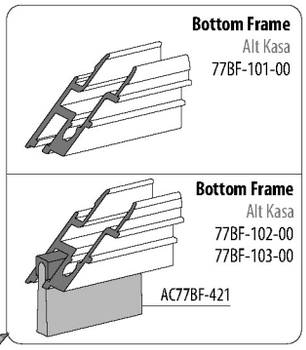

04-A POINT DETAIL / NOKTA DETAYI

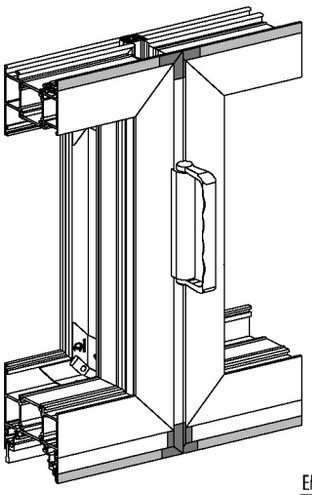

DETAIL / DETAY

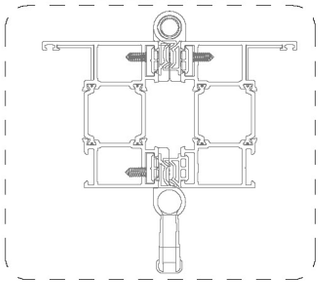

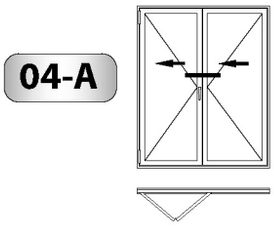

Attention to gasket direction.
Fitil yönlerine dikkat ediniz.



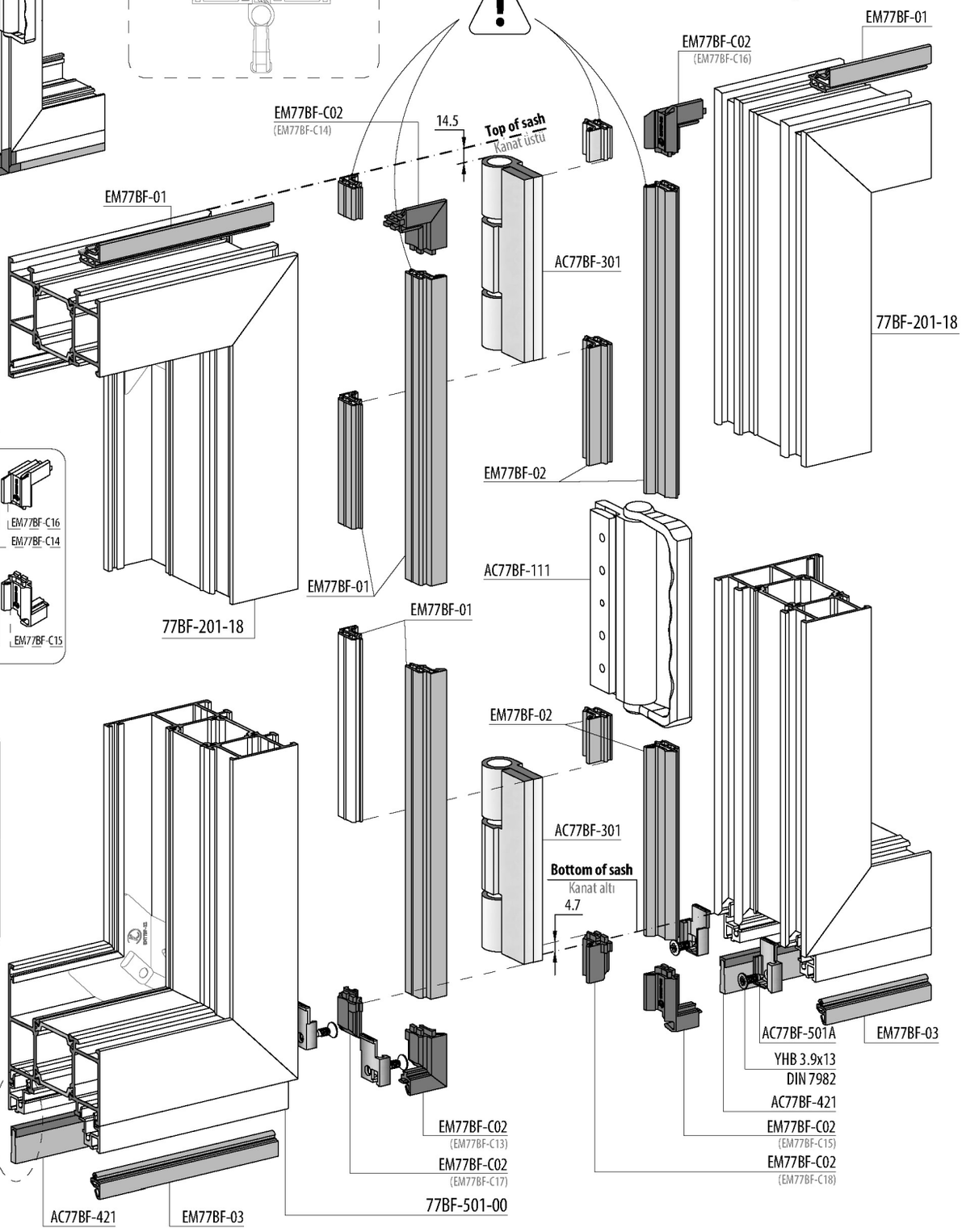

EM77BF-501A
HORIZONTAL ADAPTOR PLASTIC CAP
YATAY ADAPTÖR PLASTİK KAPAK



EM77BF-C02
EPDM CORNER ENJECTION
EPDM KÖŞE ENJEKSİYON

Attention
Dikkat !...



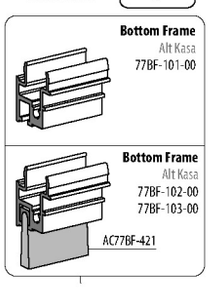

05-A POINT DETAIL / NOKTA DETAYI

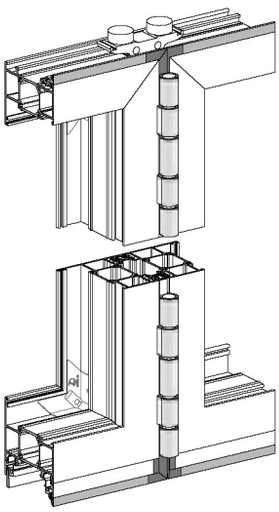

DETAIL / DETAY

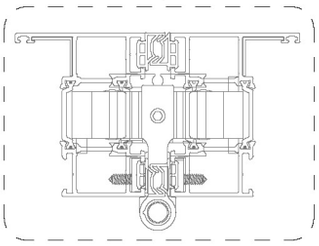

05-A

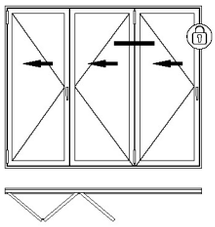

Attention to gasket direction.
Fitil yönlerine dikkat ediniz.

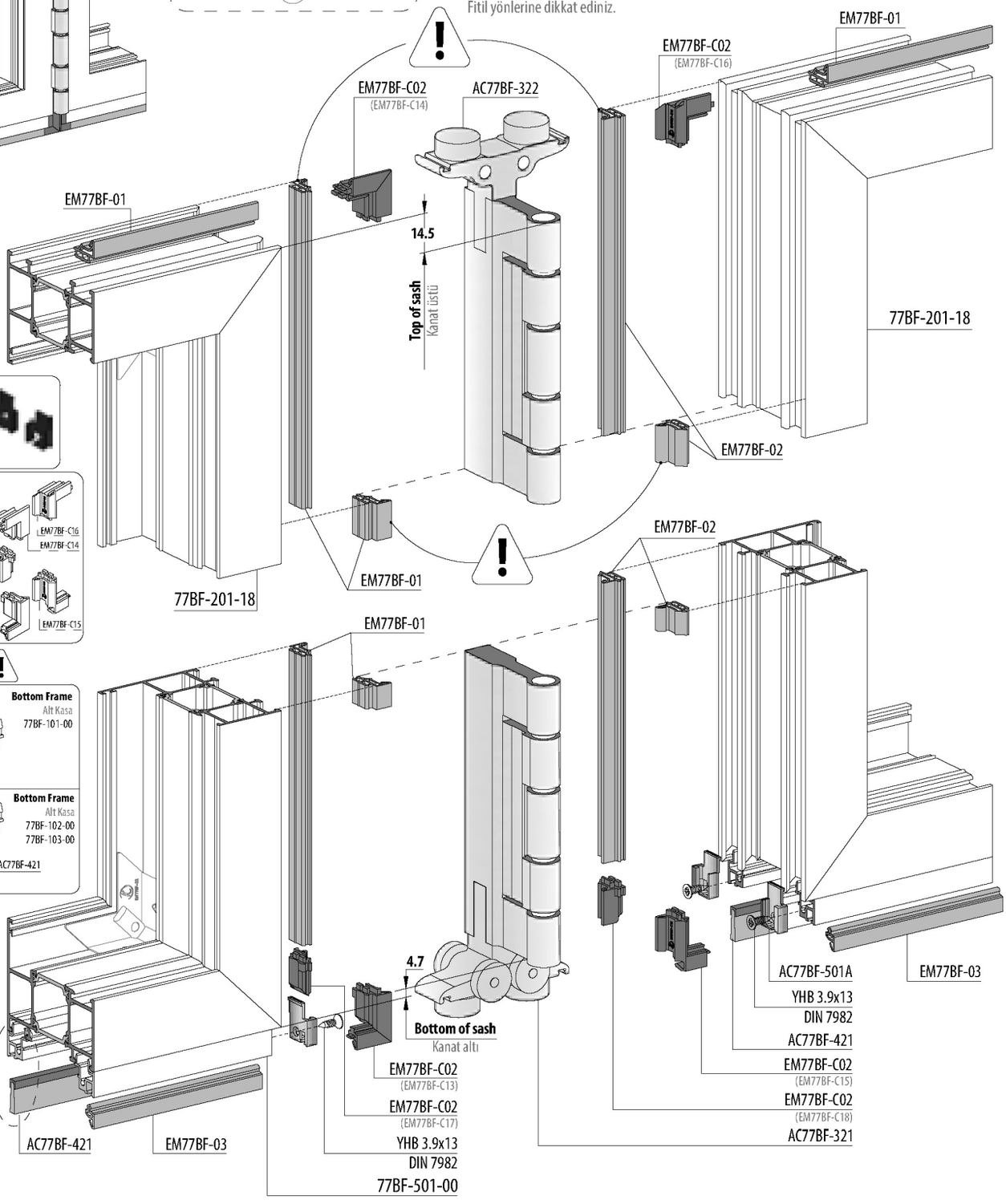

EM77BF-501A
HORIZONTAL ADAPTOR PLASTIC CAP
YATAY ADAPTÖR PLASTİK KAPAK

EM77BF-C02
EPDM CORNER ENJECTION
EPDM KÖŞE ENJEKSİYON

Attention / Dikkat !...

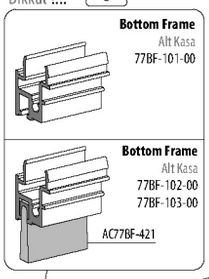

06-A1 06-A2 POINT DETAIL / NOKTA DETAYI

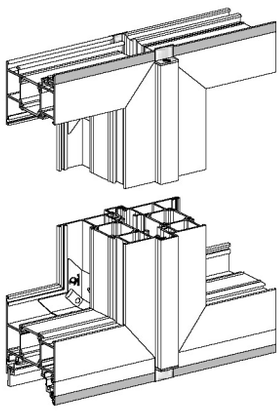

DETAIL / DETAY

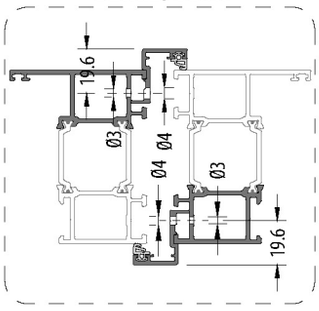

06-A1
06-A2

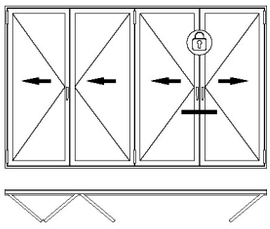

A **NOTCH** / KERTME

77BF-502-00

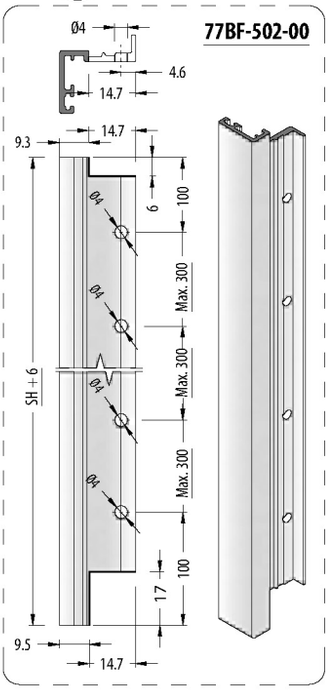

B **NOTCH** / KERTME

77BF-502-00

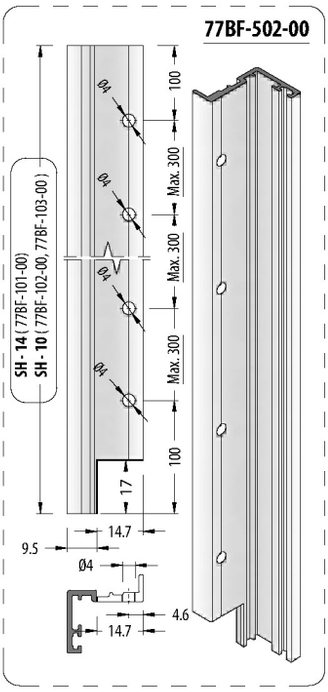

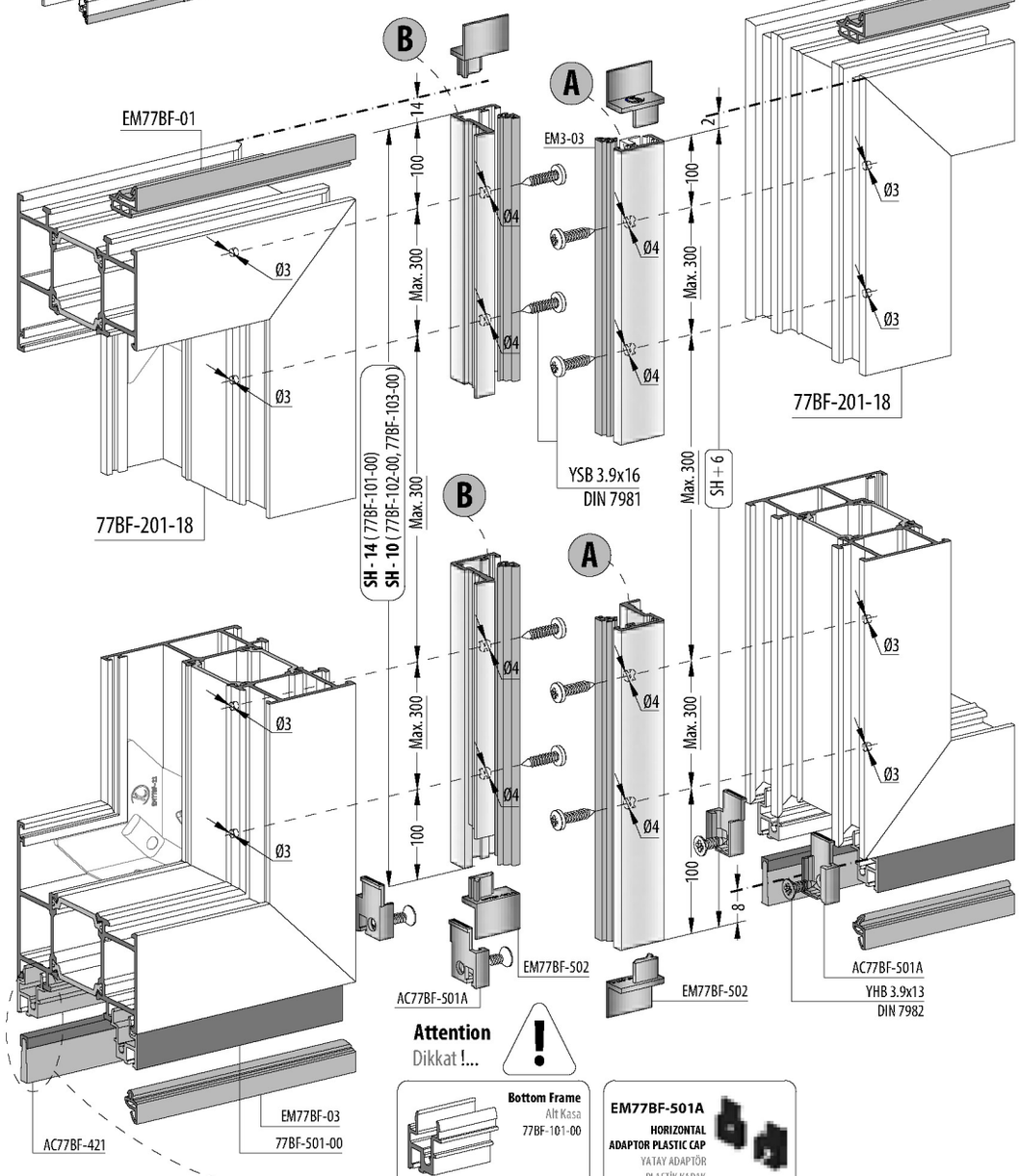

Attention
Dikkat !...

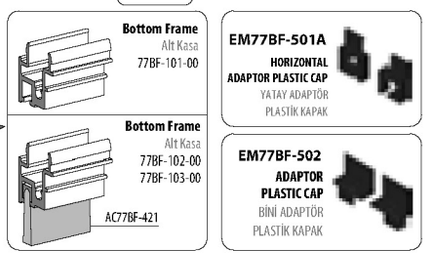

06-B1 06-B2 POINT DETAIL / NOKTA DETAYI

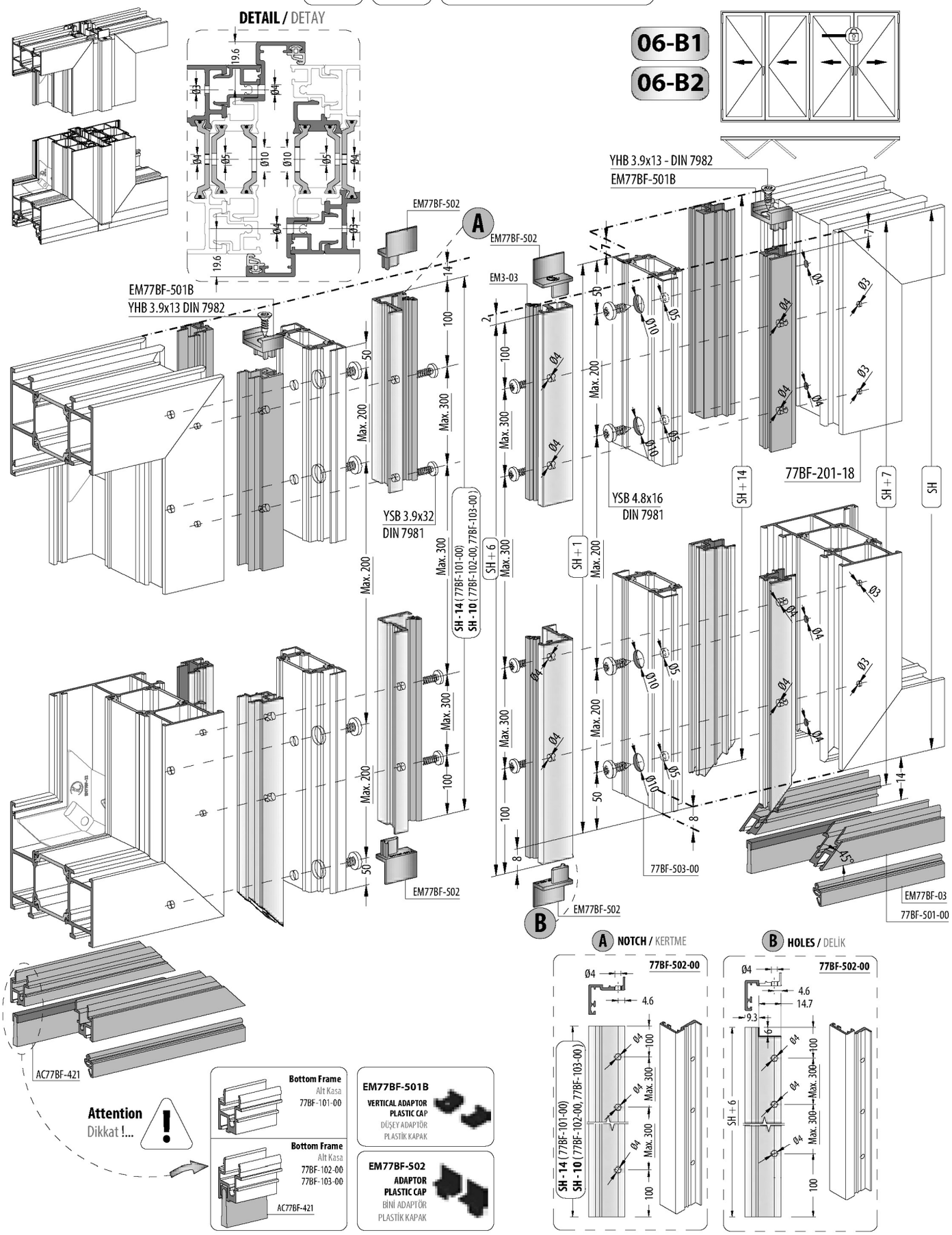

07-A POINT DETAIL / NOKTA DETAYI

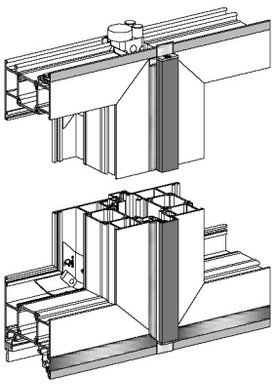

DETAIL / DETAY

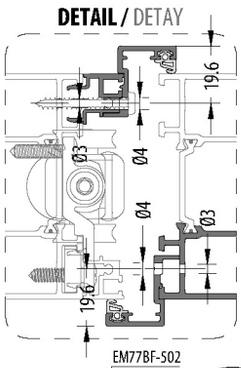

07-A

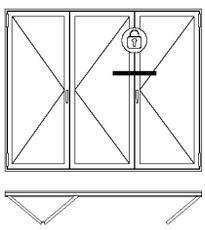

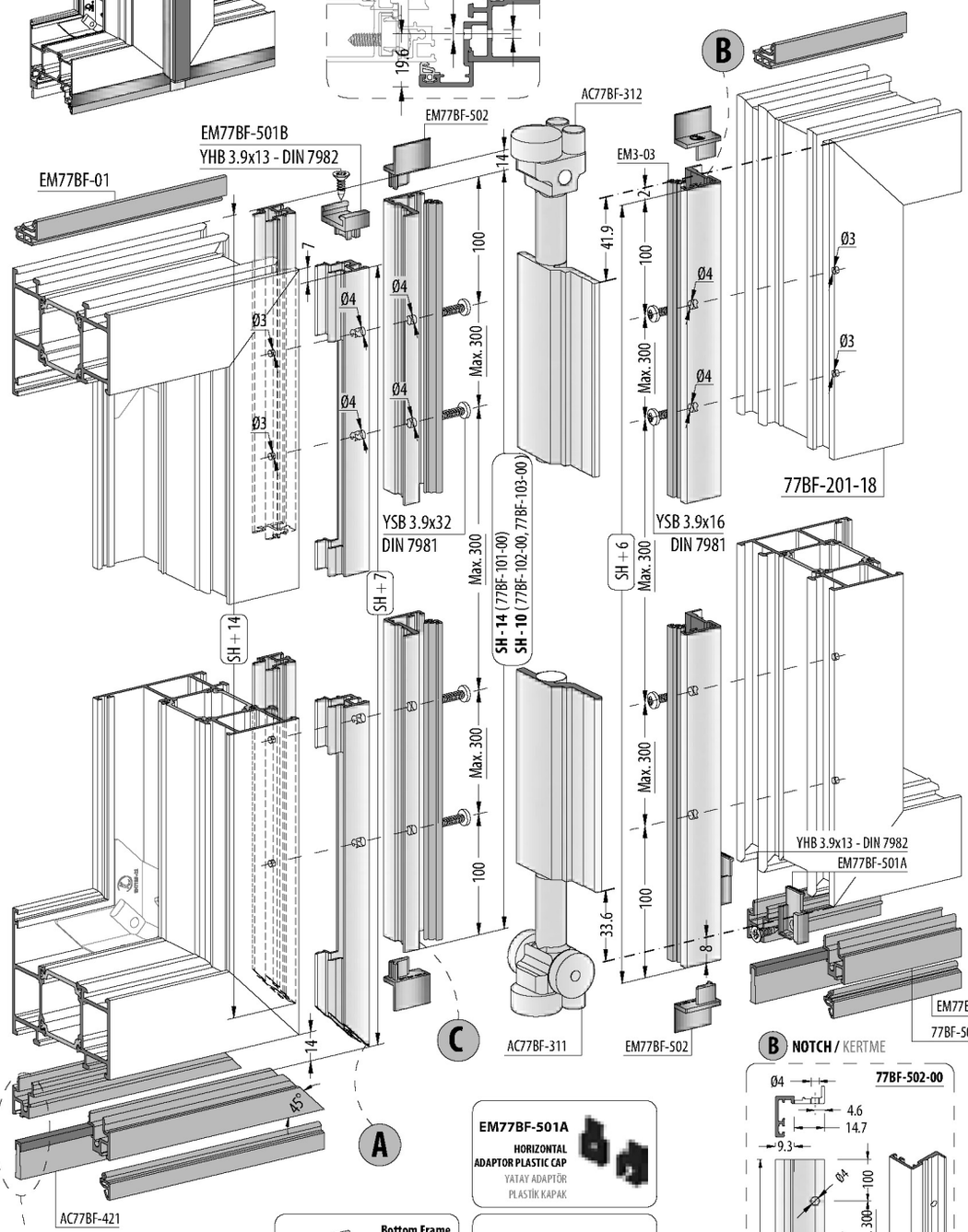

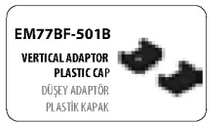



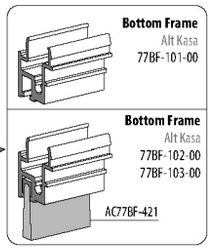

Attention
Dikkat !...

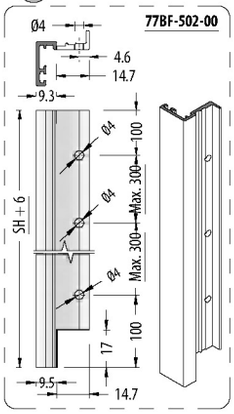

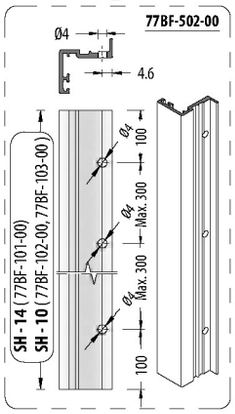

07-B POINT DETAIL / NOKTA DETAYI

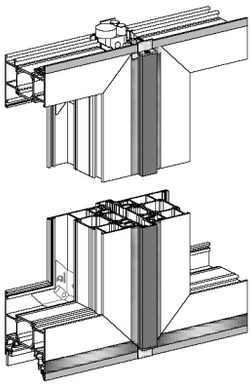

DETAIL / DETAY

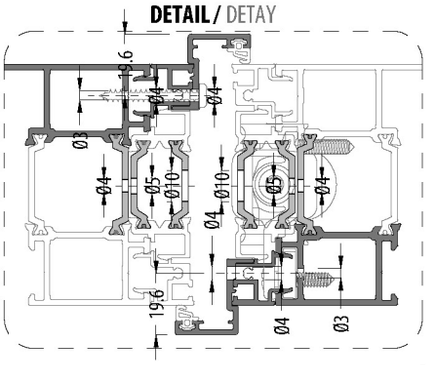

07-B

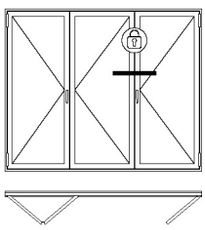

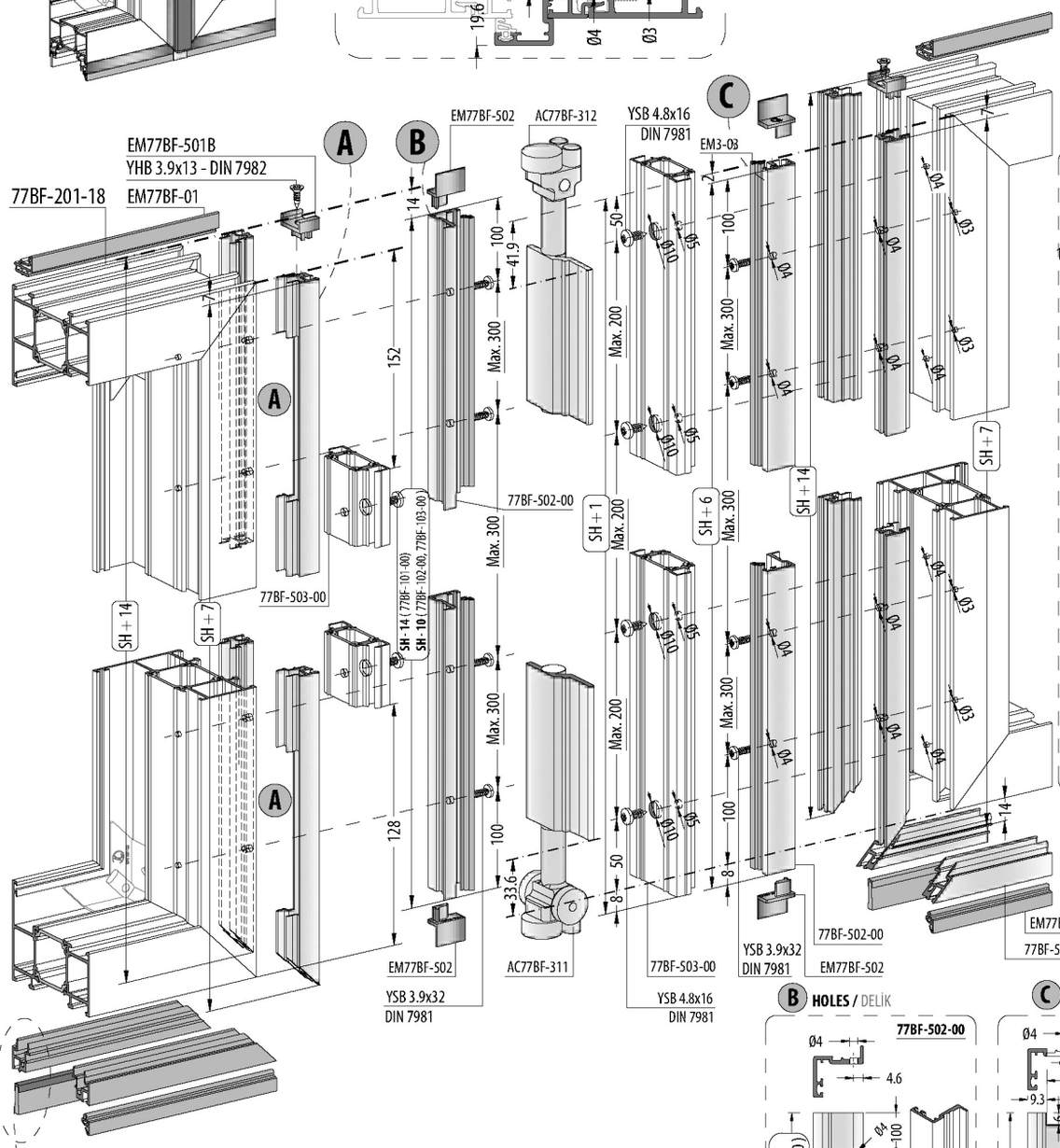

A NOTCH / KERTME

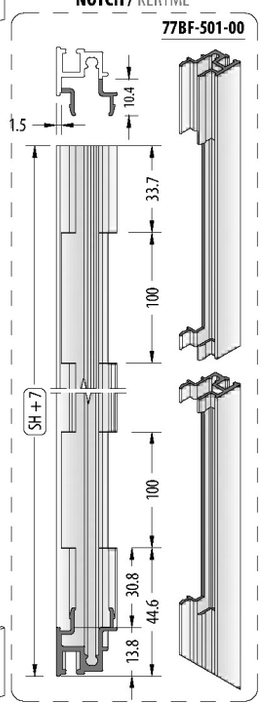

B HOLES / DELİK

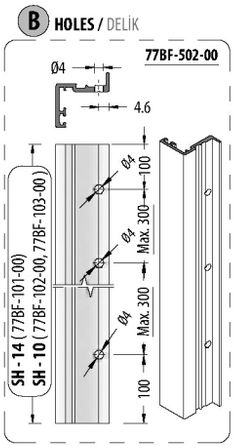

C NOTCH / KERTME

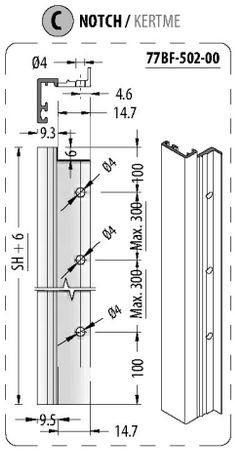

Attention
Dikkat !...

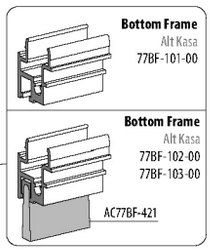



08-A POINT DETAIL / NOKTA DETAYI

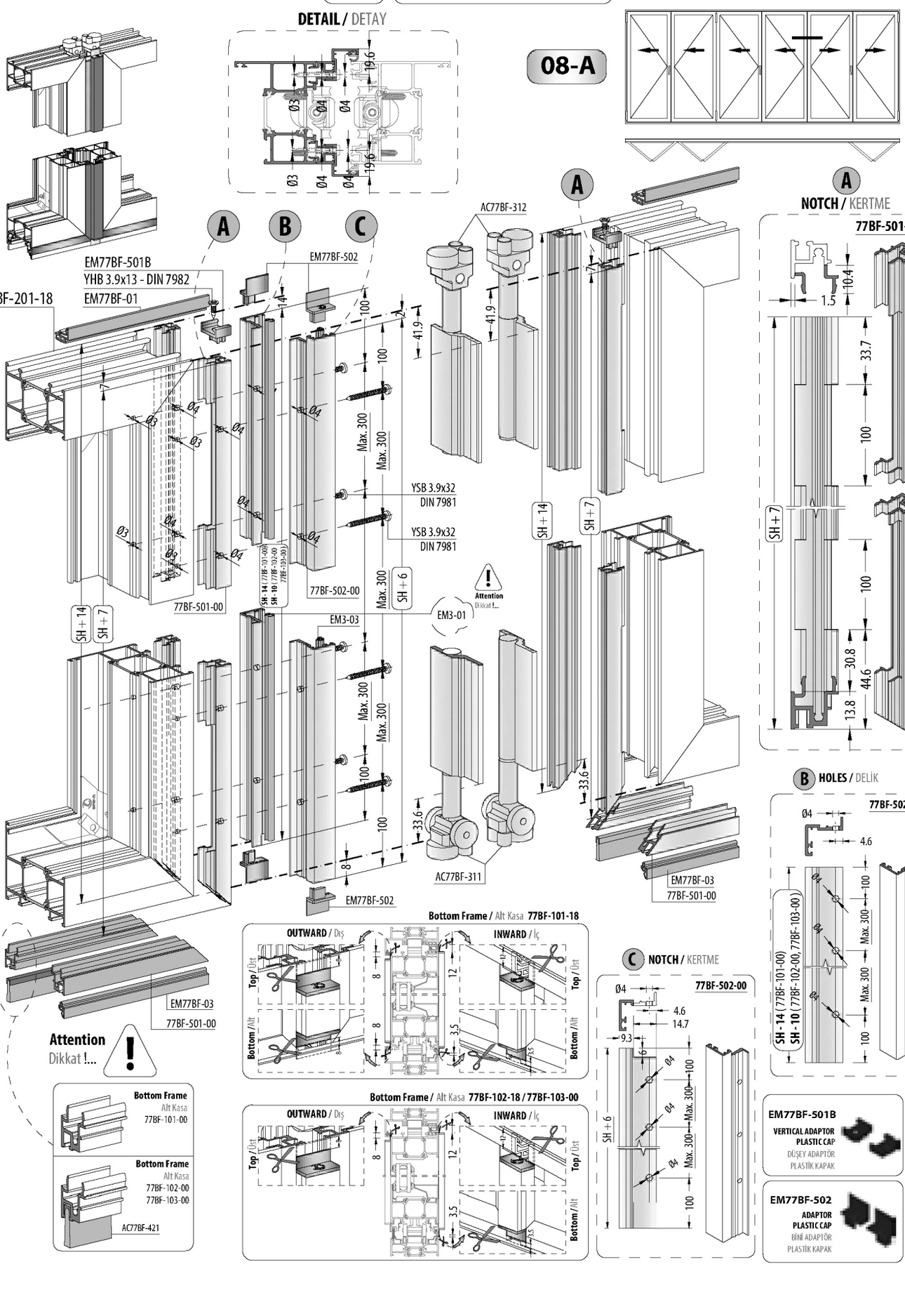

02-B / 02-A — POINT DETAIL / NOKTA DETAYI

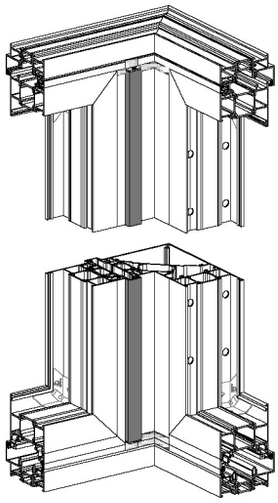

DETAIL / DETAY

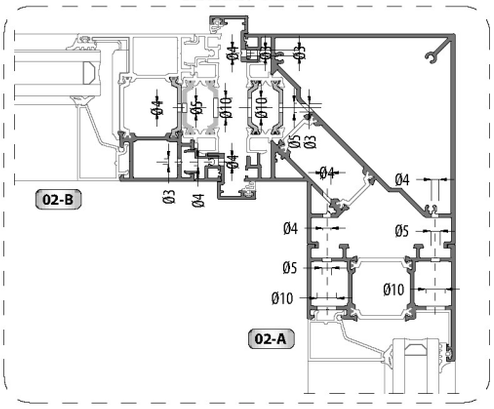

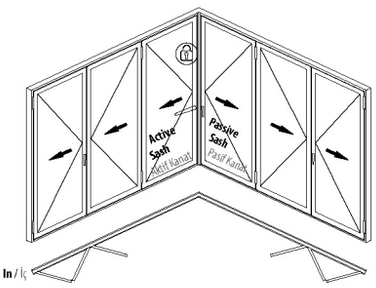

A NOTCH / KERTME

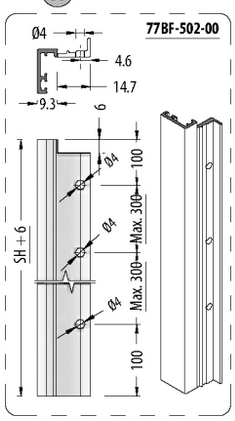

B HOLES / DELİK

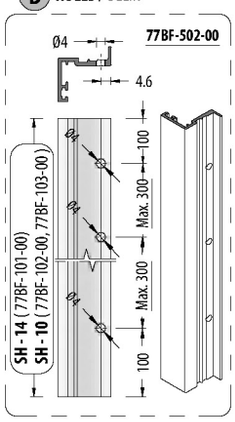

Attention
Dikkat !...

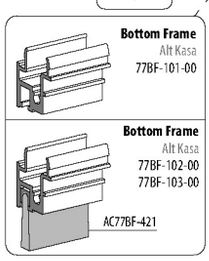

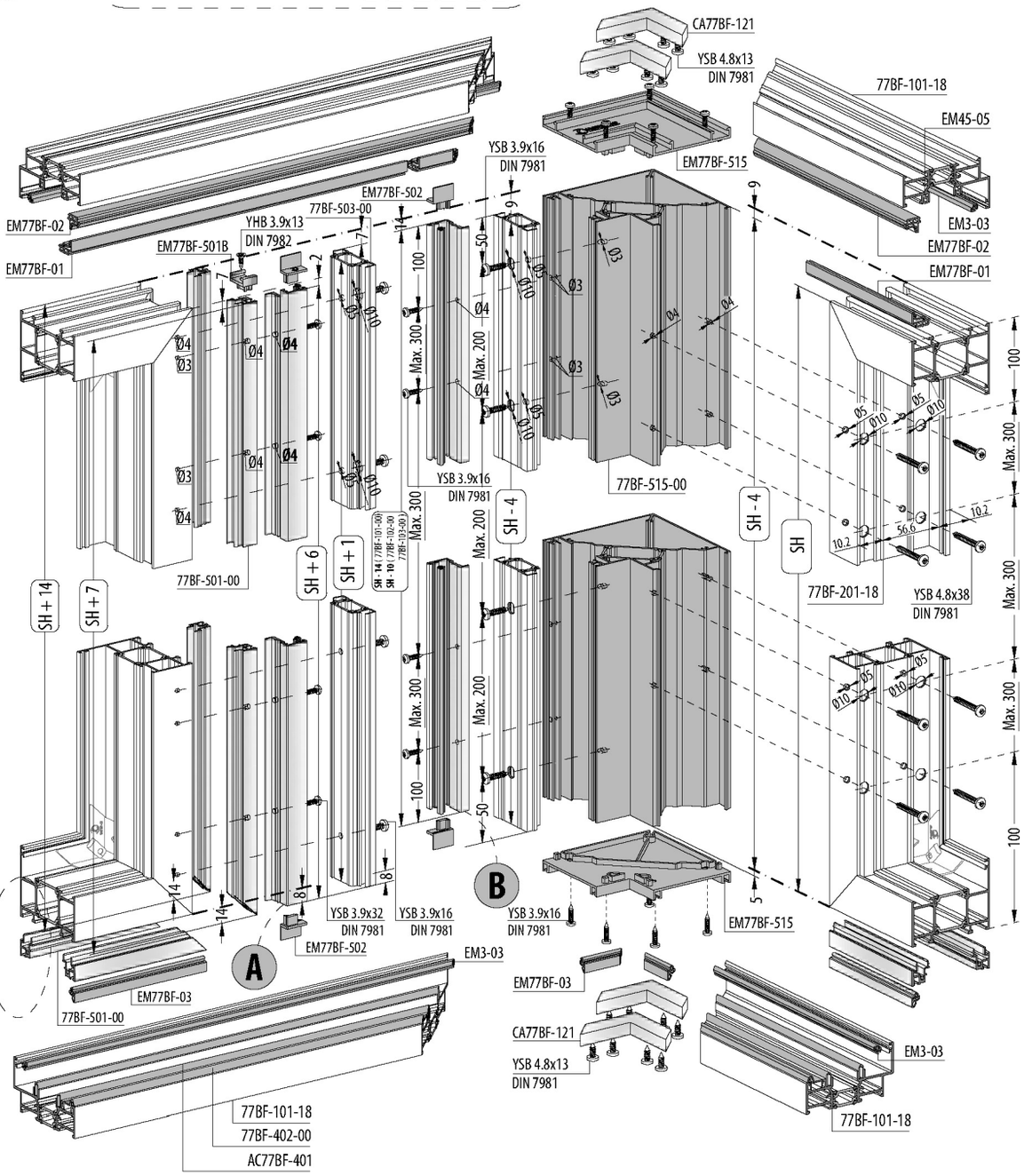

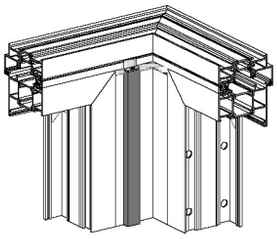

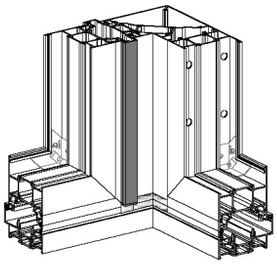

03-A / 02-A — POINT DETAIL / NOKTA DETAYI

DETAIL / DETAY

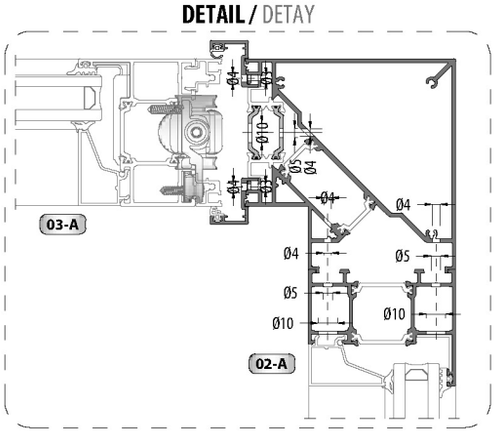

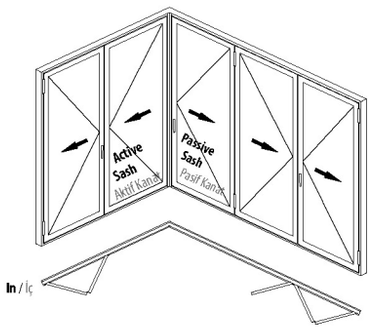

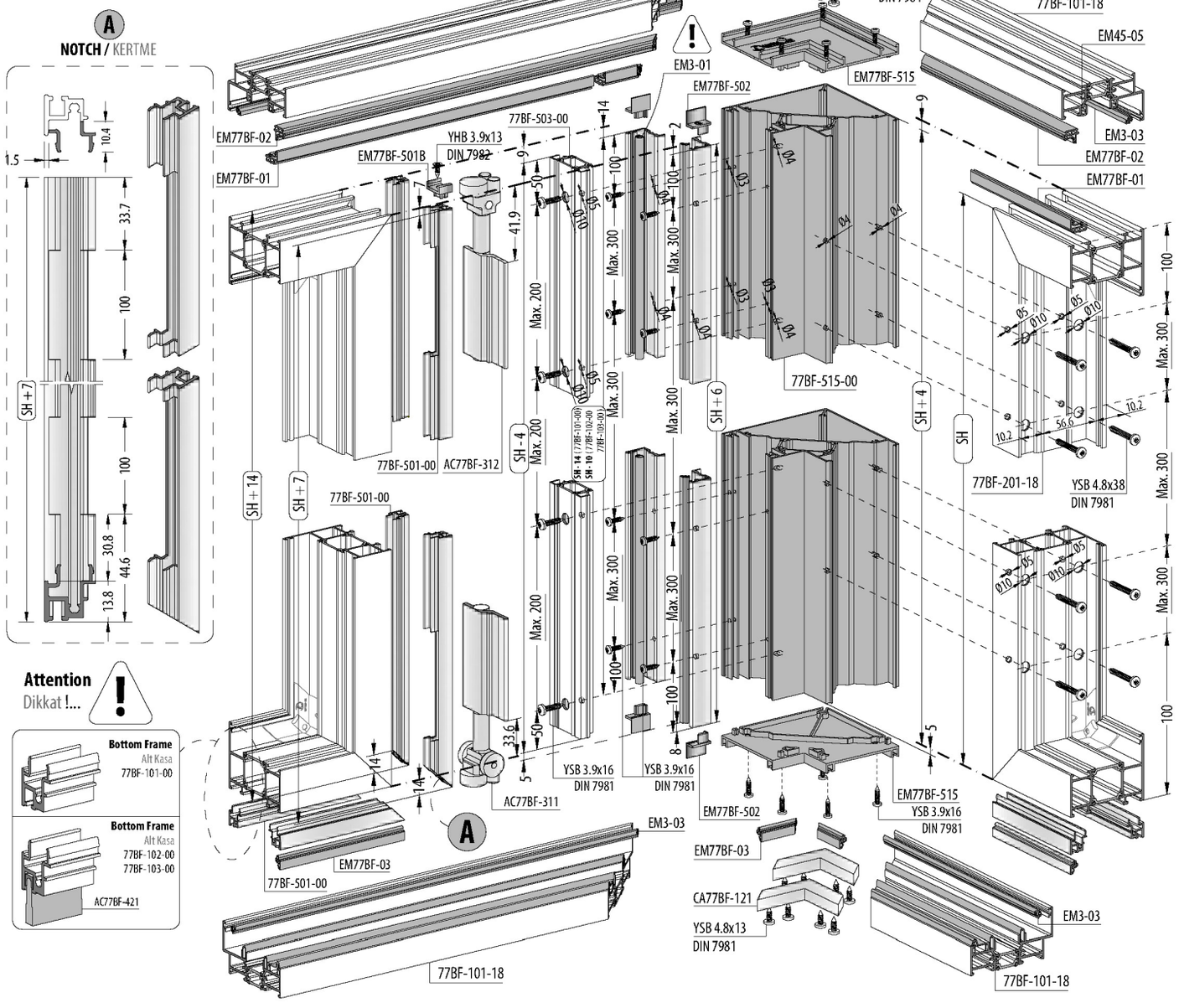

01-A **POINT DETAIL /** NOKTA DETAYI

DETAIL / DETAY

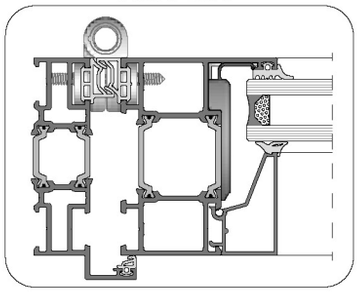

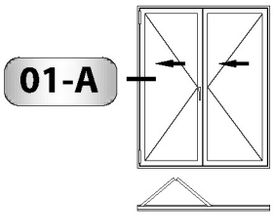

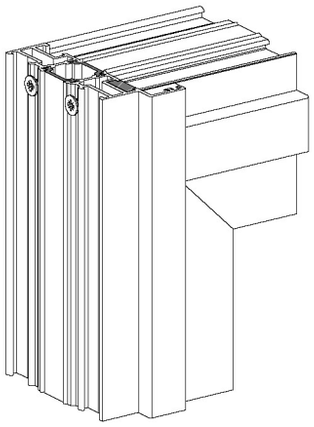

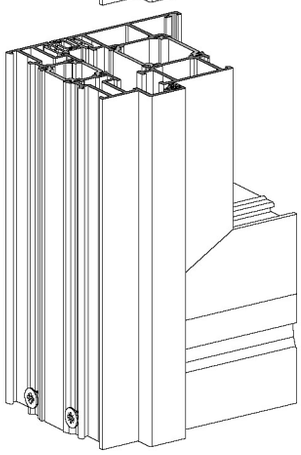

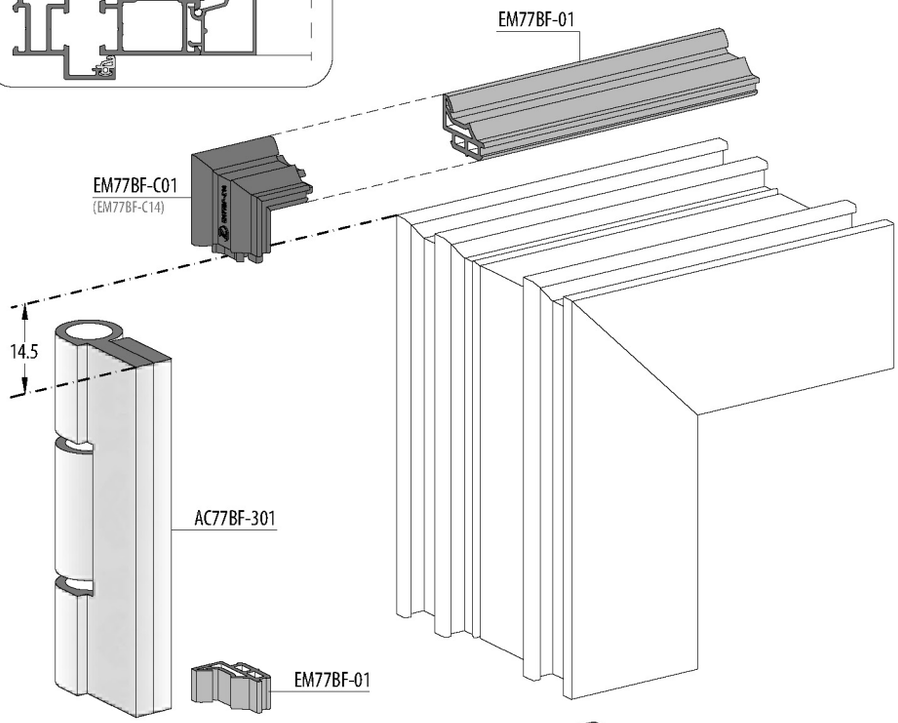

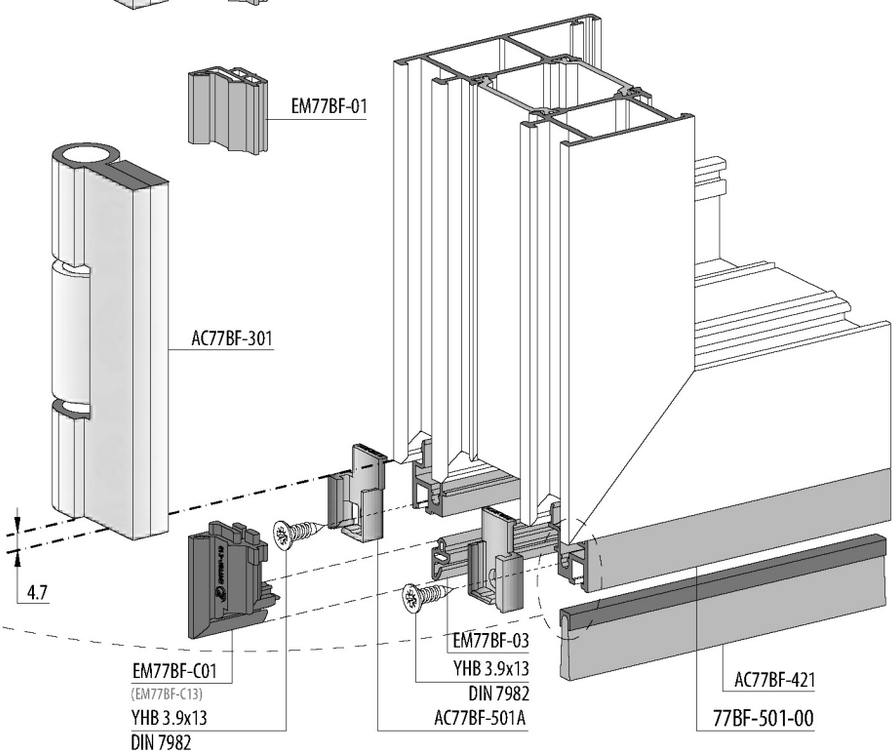



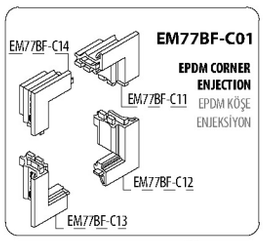

Attention
Dikkat !...

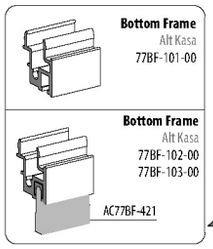

01-A* POINT DETAIL / NOKTA DETAYI

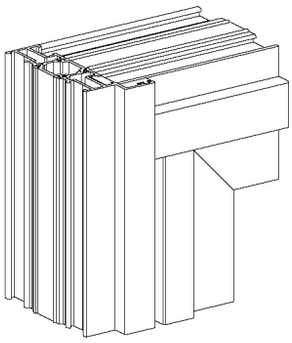

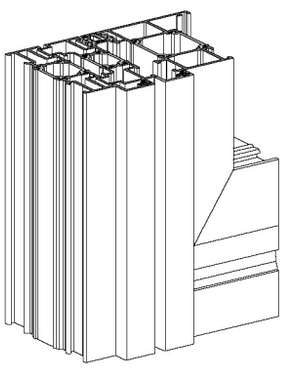

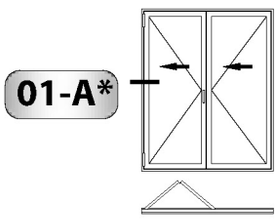

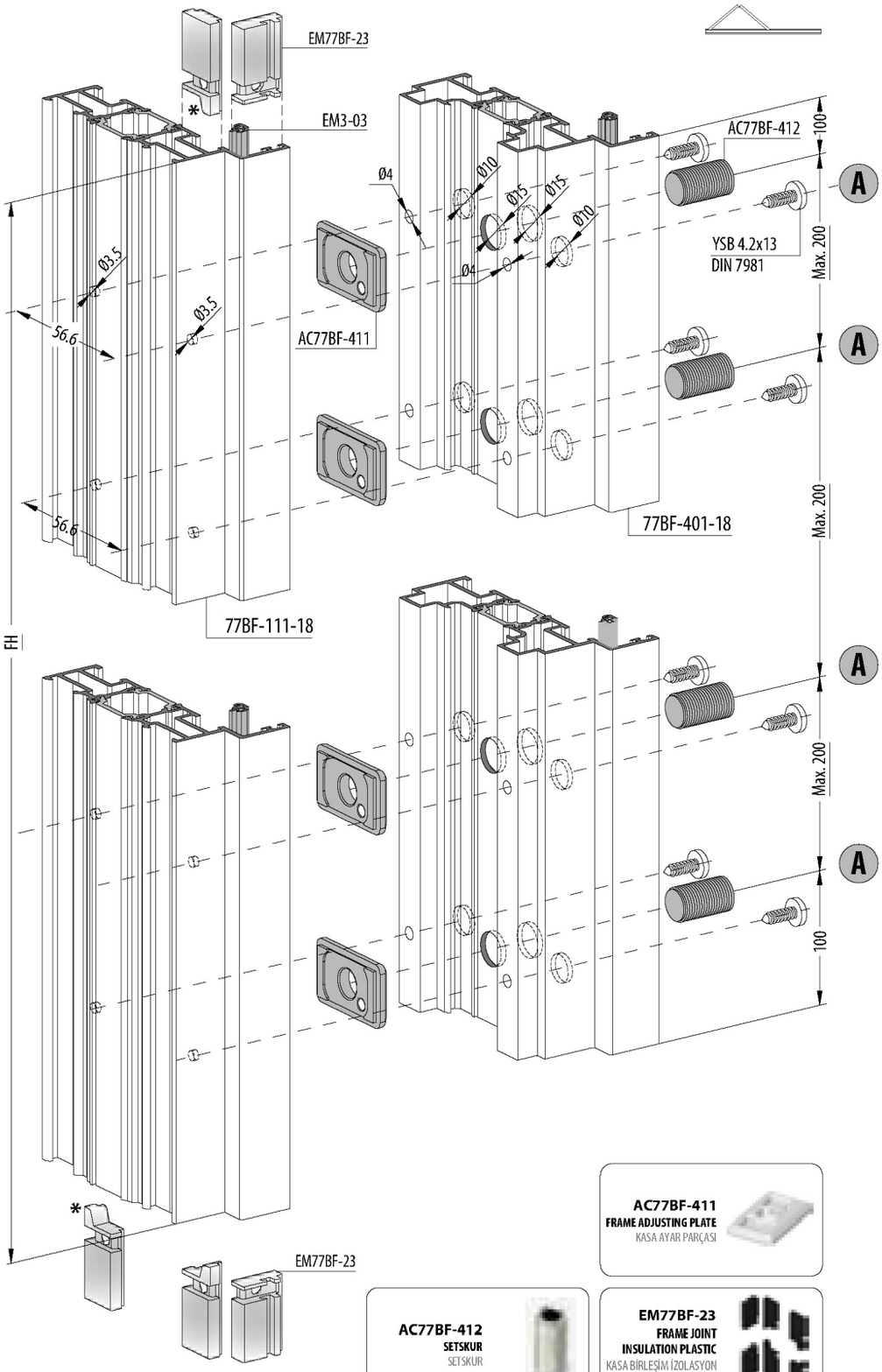

Attention
Dikkat !...



EM77BF-23
MUST BE CUT
KESİLMELİ

A
DETAIL / DETAY

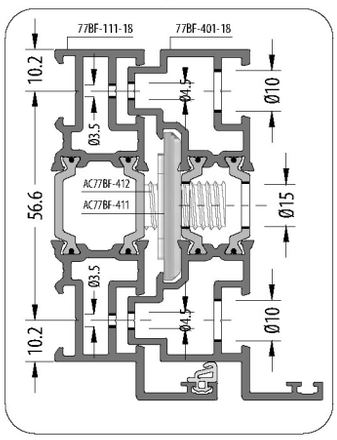

AC77BF-411
FRAME ADJUSTING PLATE
KASA AYAR PARÇASI

AC77BF-412
SETSKUR
SETSKUR

EM77BF-23
FRAME JOINT
INSULATION PLASTIC
KASA BİRLEŞİM İZOLASYON PLASTİĞİ

02-A POINT DETAIL / NOKTA DETAYI

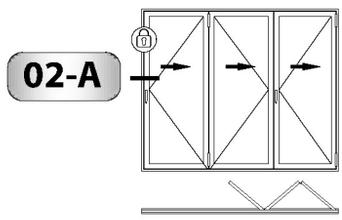

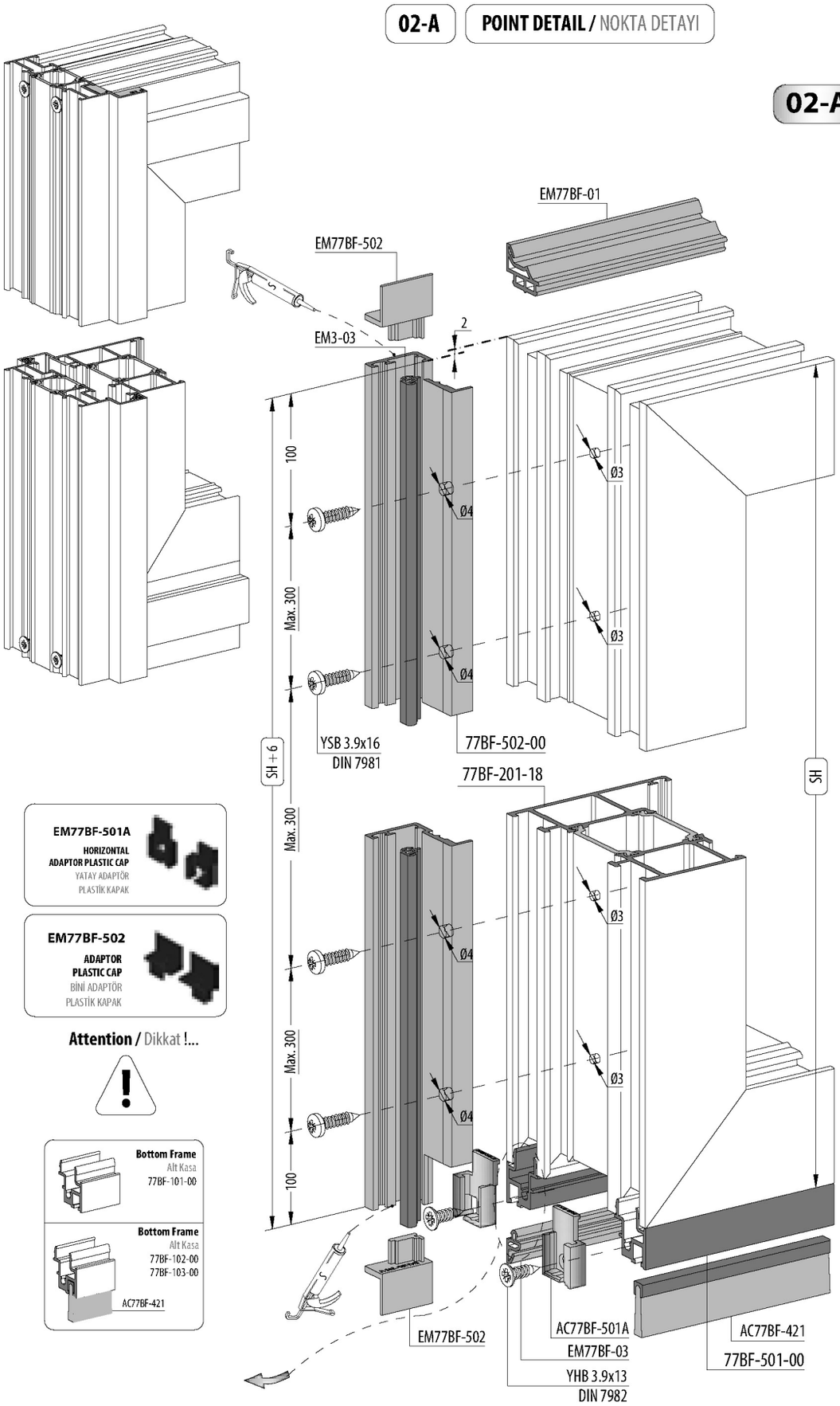

DETAIL / DETAY

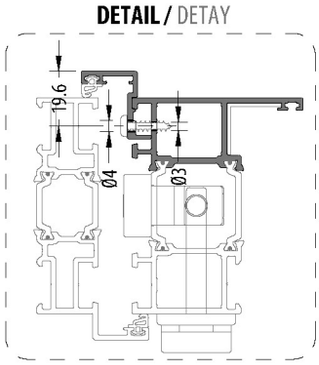

A

NOTCH / KERTME

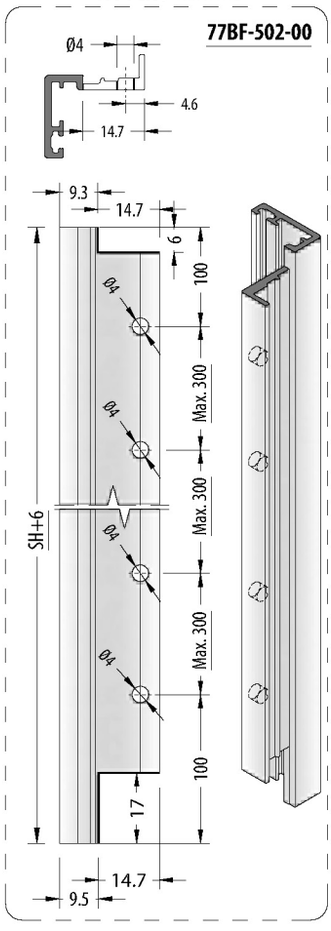

Attention / Dikkat !...

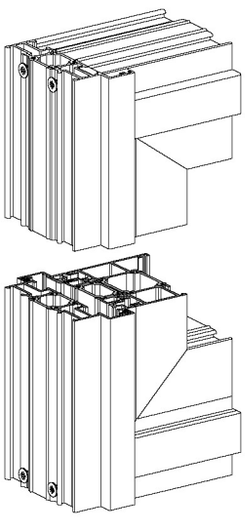

02-B **POINT DETAIL /** NOKTA DETAYI

DETAIL / DETAY

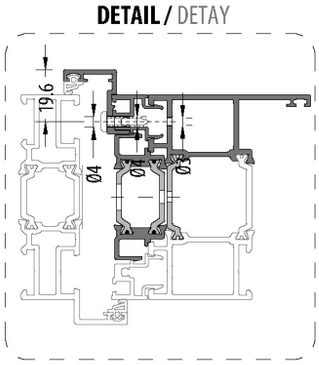

02-B

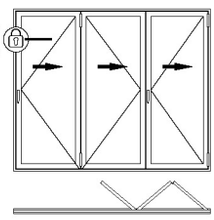

A

NOTCH / KERTME

77BF-502-00

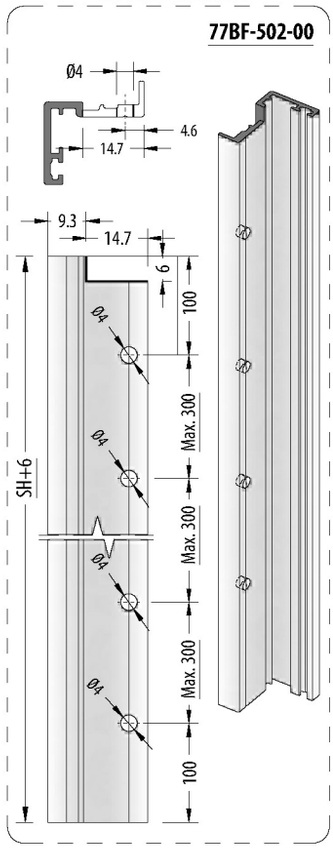

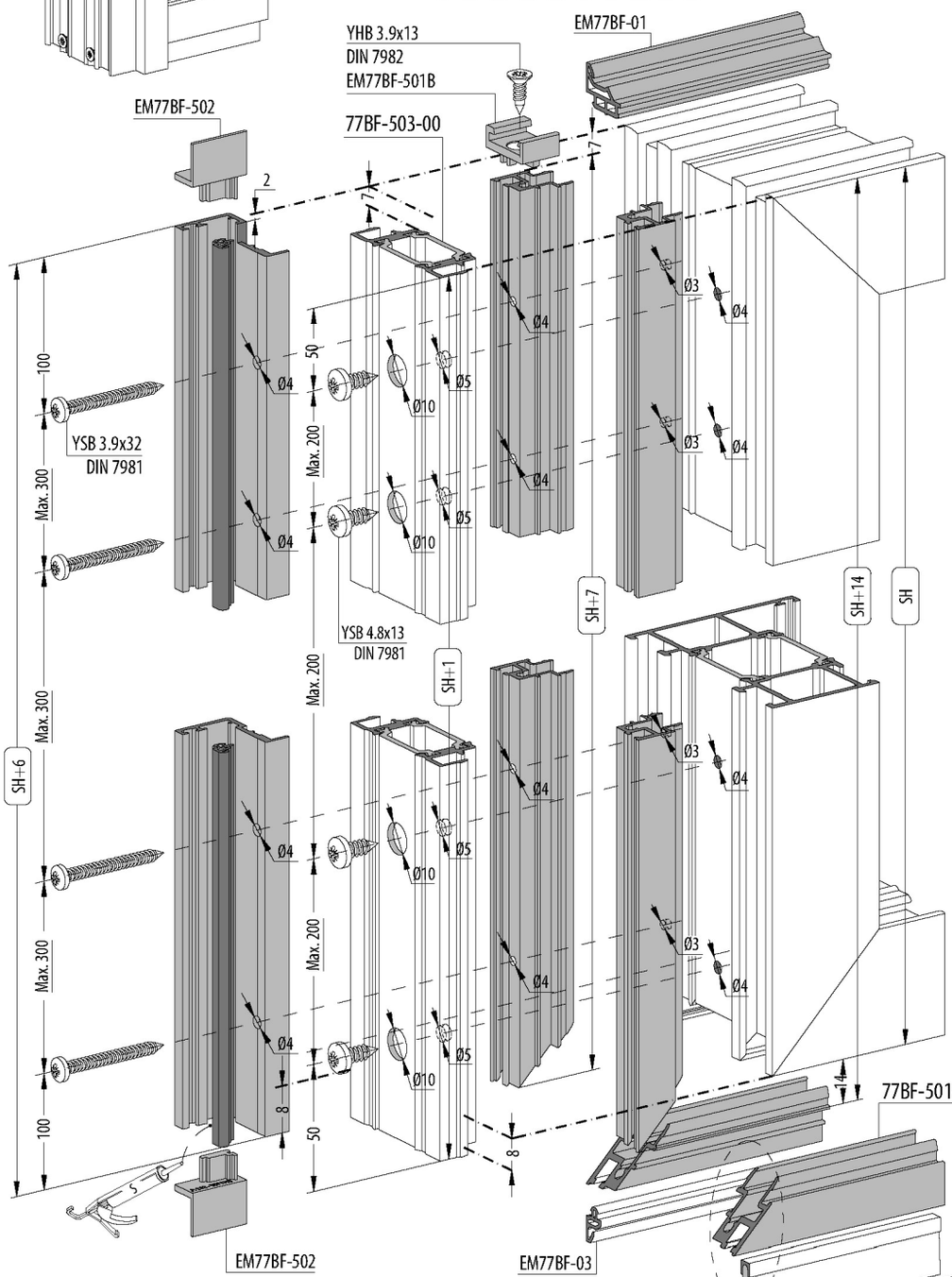

EM77BF-502
ADAPTOR
PLASTIC CAP
BİNİ ADAPTÖR
PLASTİK KAPAK



EM77BF-501B
VERTICAL ADAPTOR
PLASTIC CAP
DÜŞEY ADAPTÖR
PLASTİK KAPAK



Attention
Dikkat !...



Bottom Frame
Alt Kasa
77BF-101-00

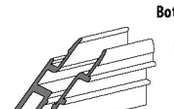

Bottom Frame
Alt Kasa
77BF-102-00
77BF-103-00

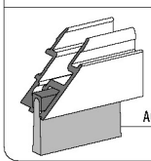

03-A POINT DETAIL / NOKTA DETAYI

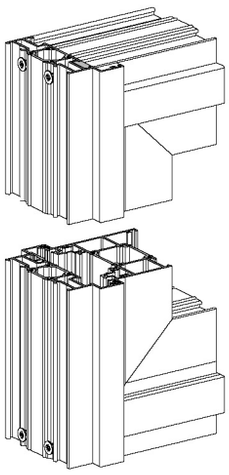

DETAIL / DETAY

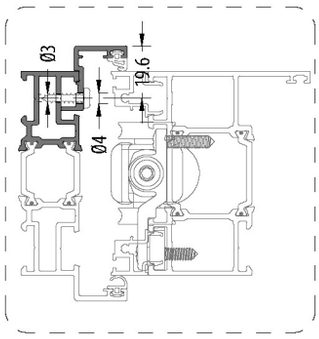





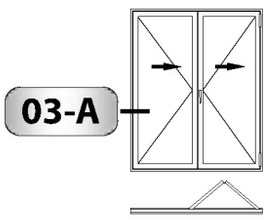

A

NOTCH / KERTME

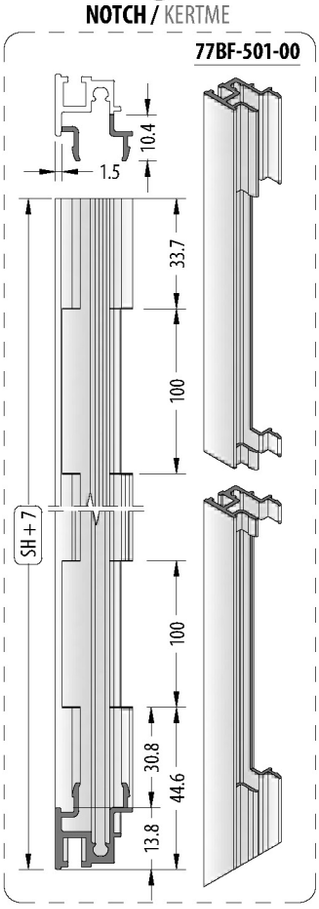

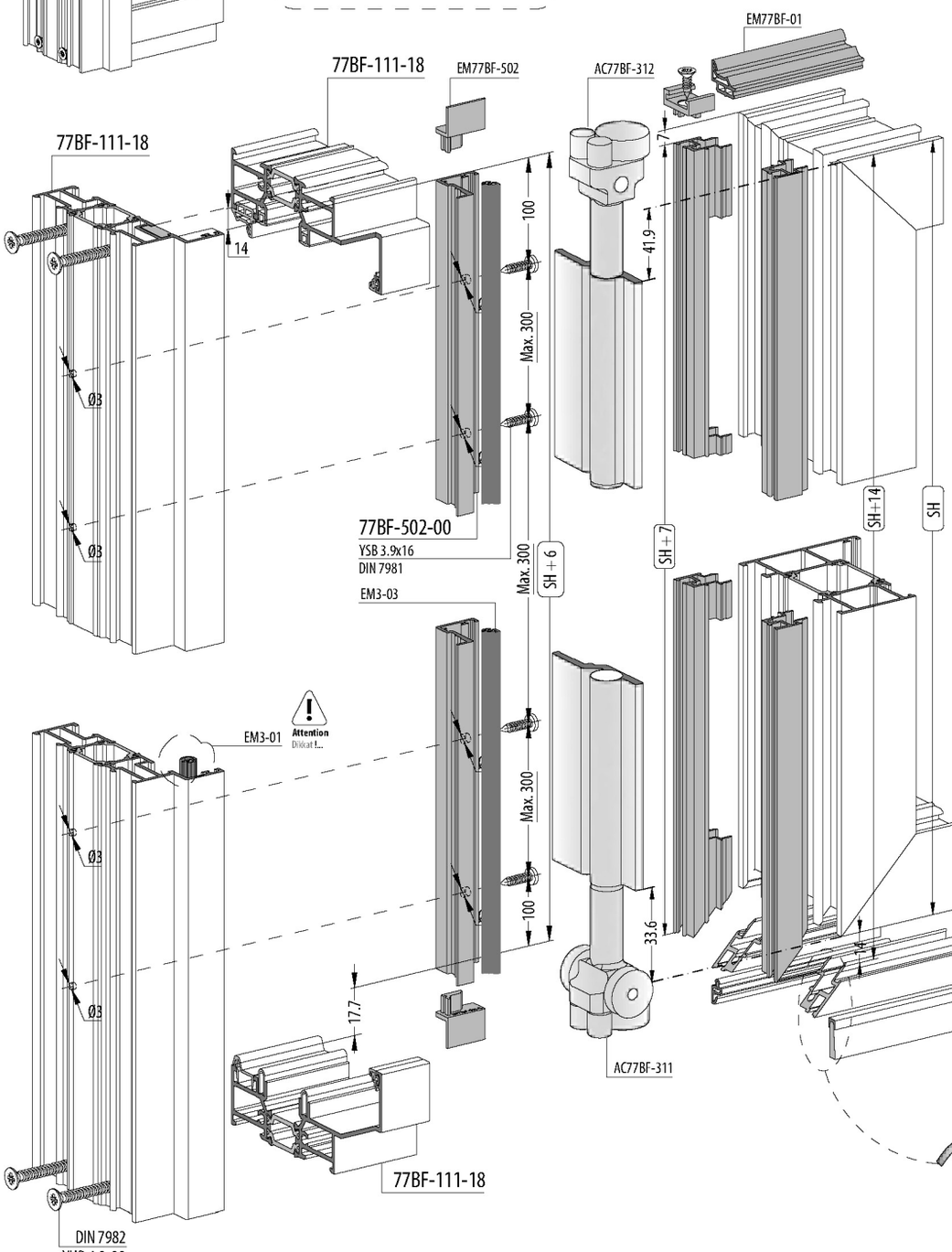

Attention / Dikkat !...

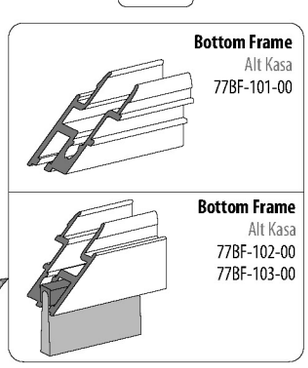

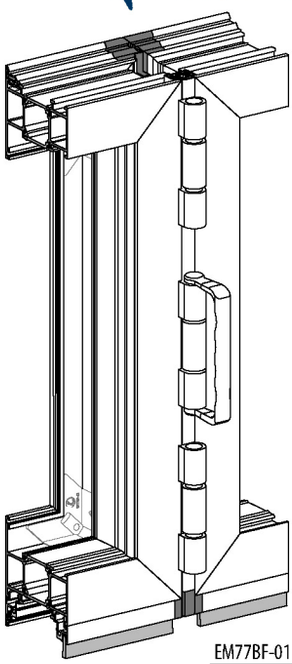

04-A **POINT DETAIL** / NOKTA DETAYI

DETAIL / DETAY

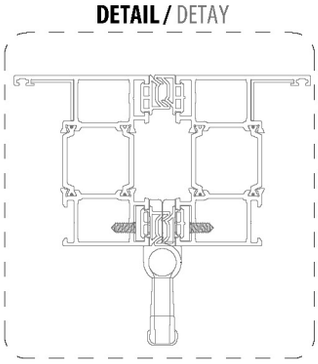

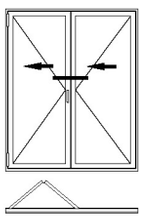

04-A

Attention to gasket direction.
Fitil yönlerine dikkat ediniz.

EM77BF-01

EM77BF-C02
(EM77BF-C16)

EM77BF-C02
(EM77BF-C14)

Top of sash
Kanat üstü

14.5

AC77BF-301

77BF-201-18

EM77BF-501A
HORIZONTAL ADAPTOR PLASTIC CAP
YATAY ADAPTÖR PLASTİK KAPAK



EM77BF-C02
EPDM CORNER ENJEKSİYON
EPDM KÖŞE ENJEKSİYON

Attention
Dikkat !...

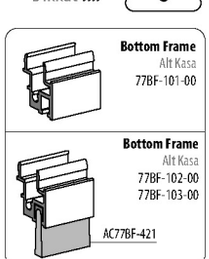

AC77BF-112

EM77BF-01

EM77BF-02

AC77BF-301

4.7 **Bottom of sash**
Kanat altı

AC77BF-421

AC77BF-501A

YHB 3.9x13
DIN 7982

EM77BF-03

EM77BF-C02
(EM77BF-C17)

EM77BF-C02
(EM77BF-C13)

EM77BF-C02
(EM77BF-C18)

EM77BF-C02
(EM77BF-C15)

YHB 3.9x13 - DIN 7982

AC77BF-501A

EM77BF-03

AC77BF-421

77BF-501-00

05-A **POINT DETAIL** / NOKTA DETAYI

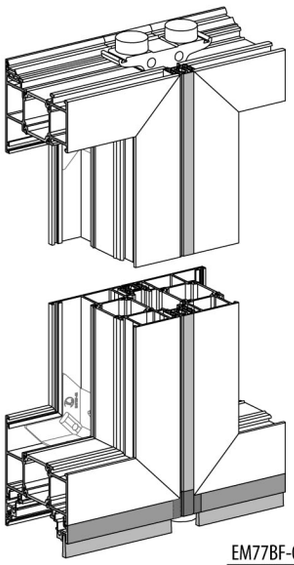

DETAIL / DETAY

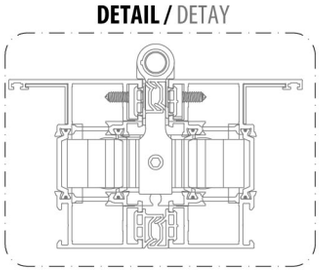

05-A

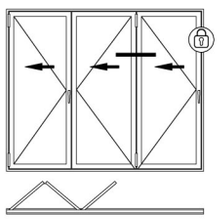

Attention to gasket direction.
Fitil yönlerine dikkat ediniz.

EM77BF-01

EM77BF-C02
(EM77BF-C16)

EM77BF-C02
(EM77BF-C14)

EM77BF-01

EM77BF-501A
HORIZONTAL ADAPTOR PLASTIC CAP
YATAY ADAPTÖR PLASTİK KAPAK



EM77BF-C02
EPDM CORNER ENJECTION
EPDM KÖŞE ENJEKSİYON

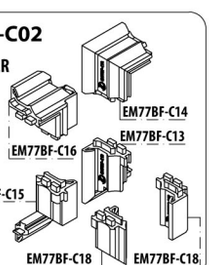

AC77BF-322

77BF-201-18

EM77BF-01

EM77BF-02

Attention
Dikkat !...

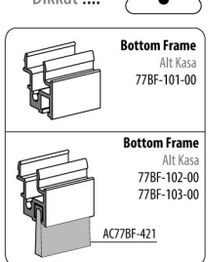

AC77BF-501A
YHB 3.9x13
DIN 7982
EM77BF-03
EM77BF-C02
(EM77BF-C17)
EM77BF-C02
(EM77BF-C13)
AC77BF-321
AC77BF-421

EM77BF-C02
(EM77BF-C18)
EM77BF-C02
(EM77BF-C15)
YHB 3.9x13 - DIN 7982
AC77BF-501A

EM77BF-03
AC77BF-421
77BF-501-00

06-A1 | 06-A2 | POINT DETAIL / NOKTA DETAYI

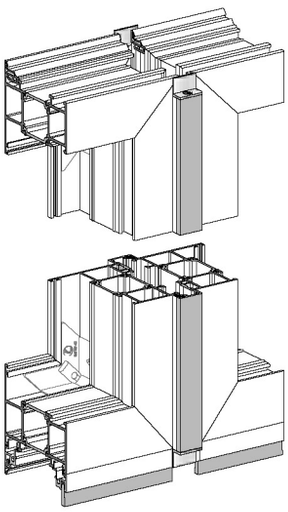

DETAIL / DETAY

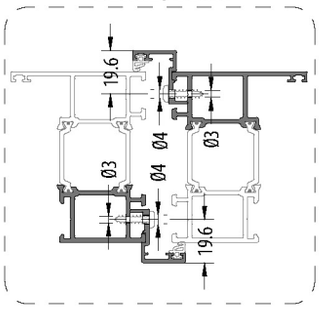

06-A1
06-A2

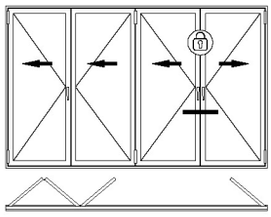

A NOTCH / KERTME

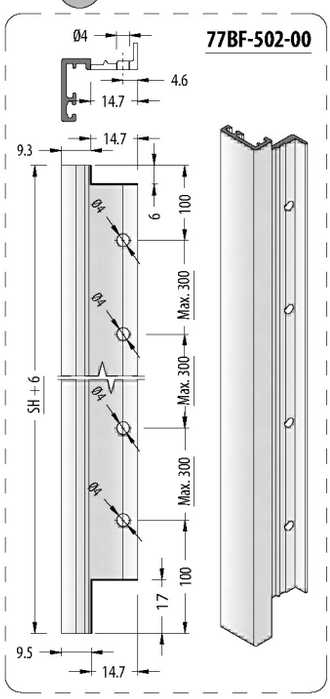

B NOTCH / KERTME

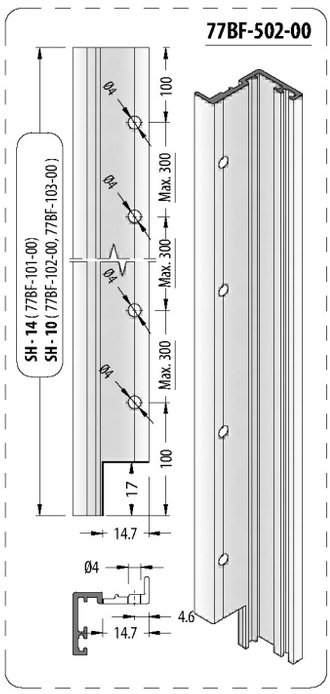

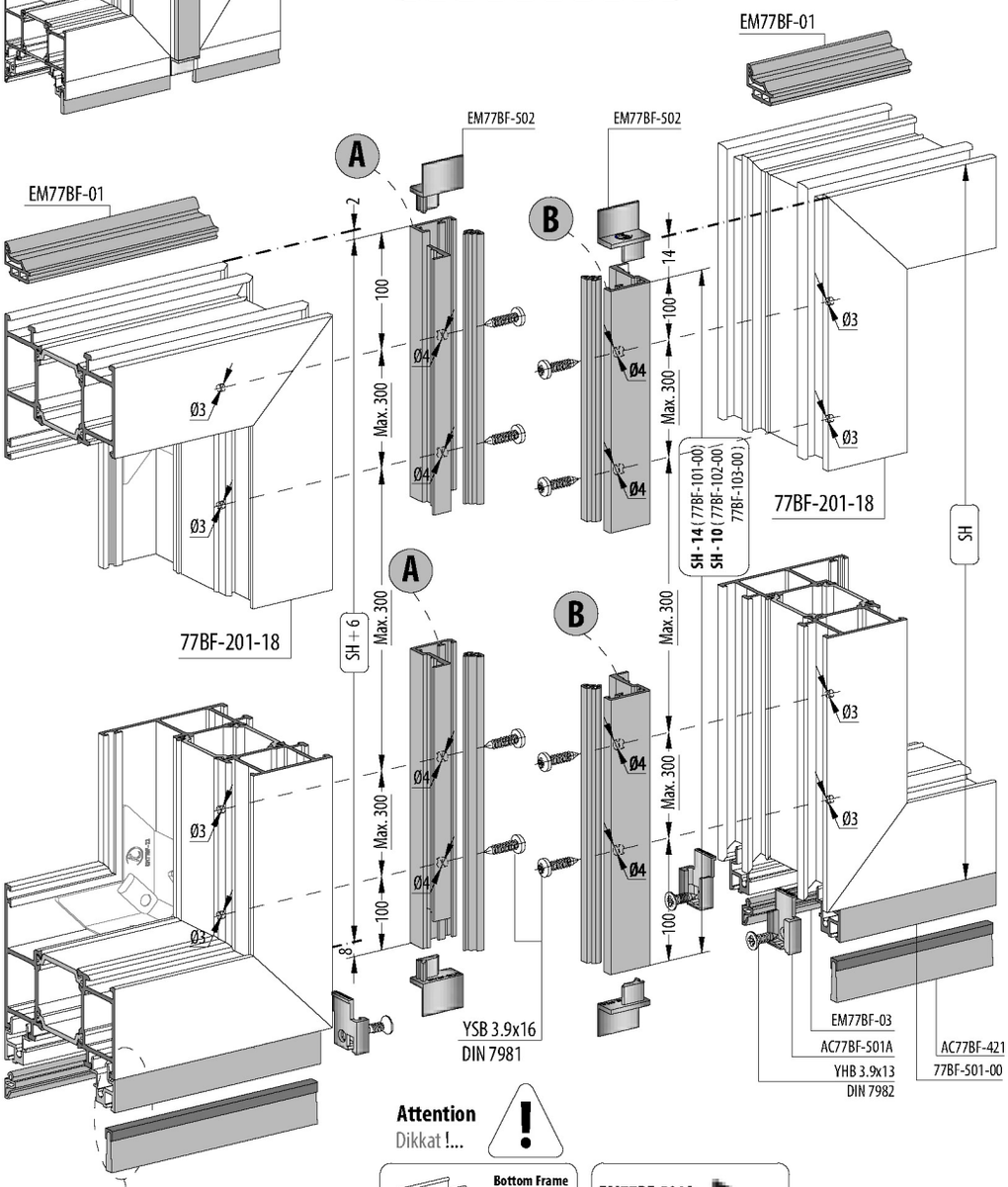

Attention
Dikkat !...

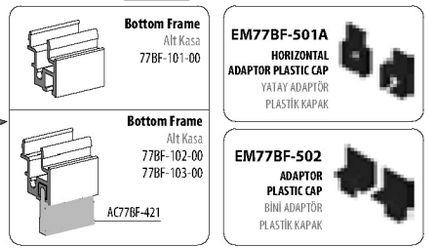

06-B1 06-B2 POINT DETAIL / NOKTA DETAYI

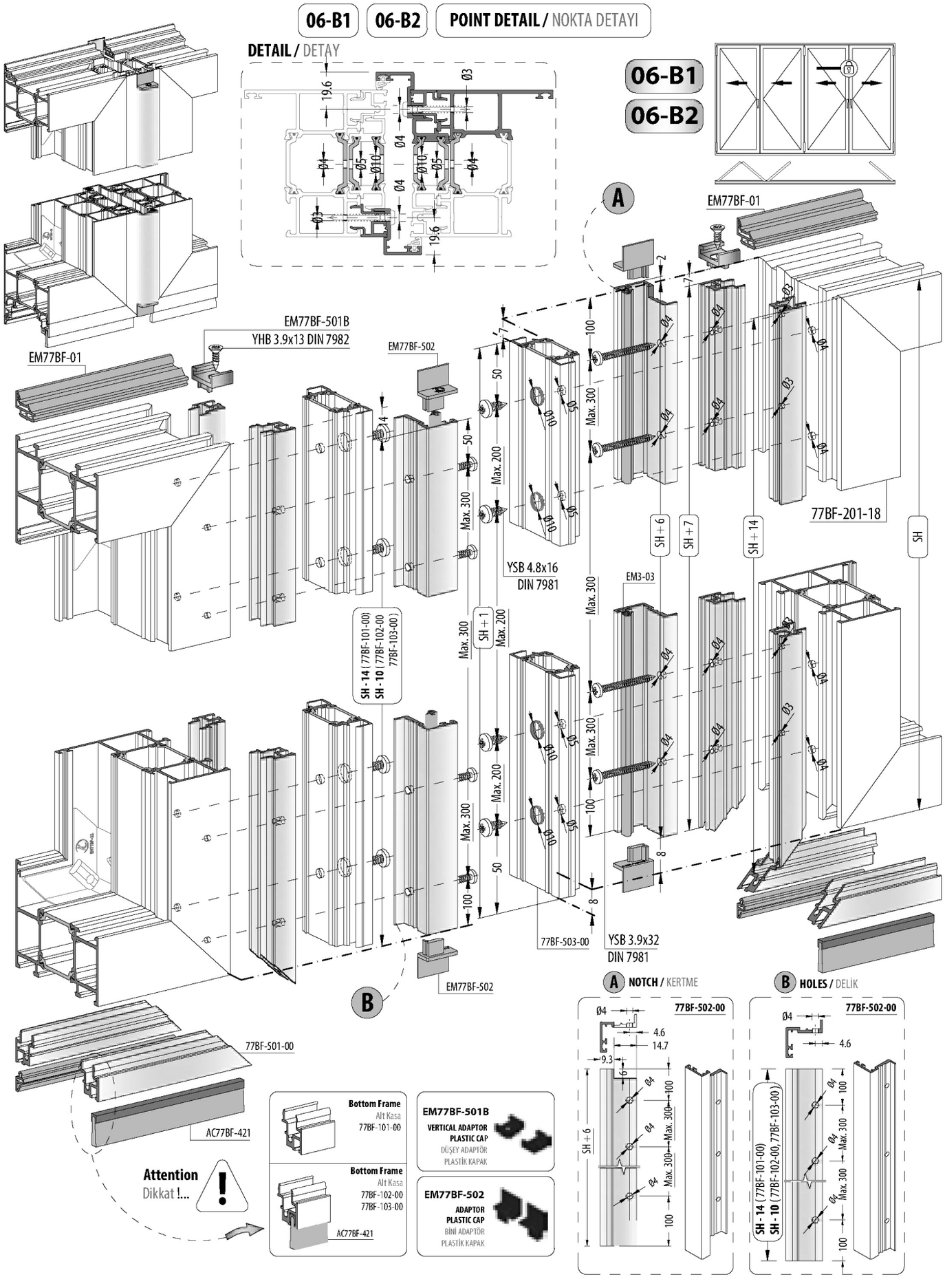

07-A POINT DETAIL / NOKTA DETAYI

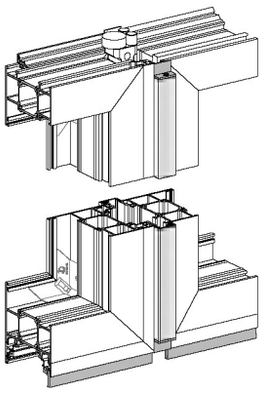

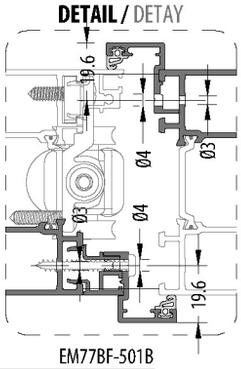

07-A

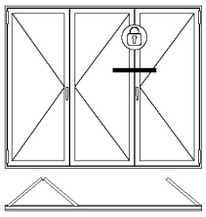

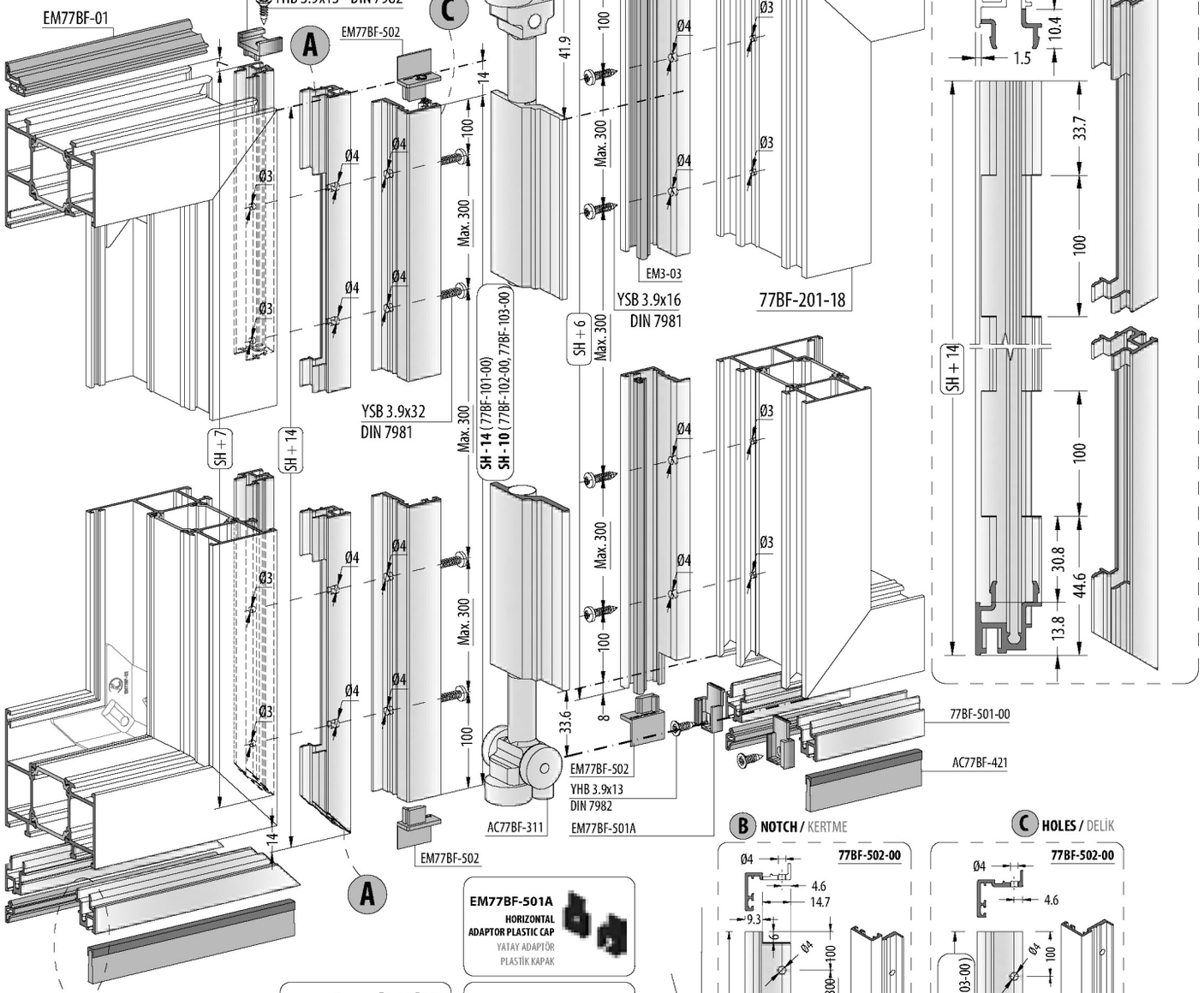

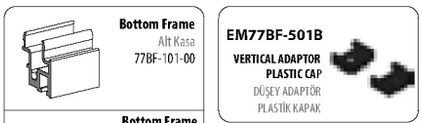

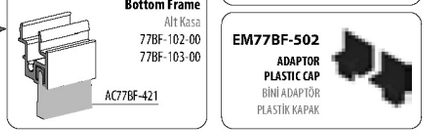

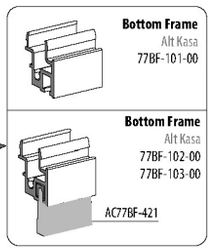

Attention
Dikkat !...

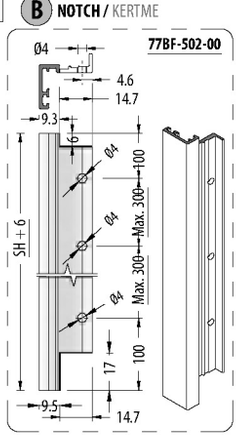

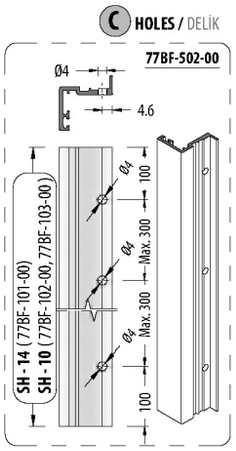

07-B POINT DETAIL / NOKTA DETAYI

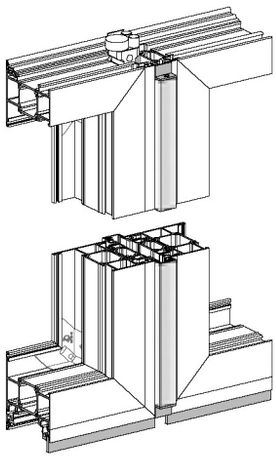

DETAIL / DETAY

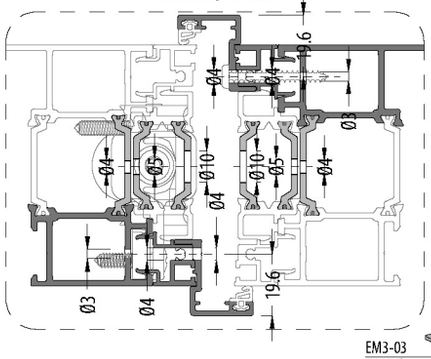

07-B

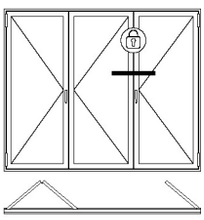

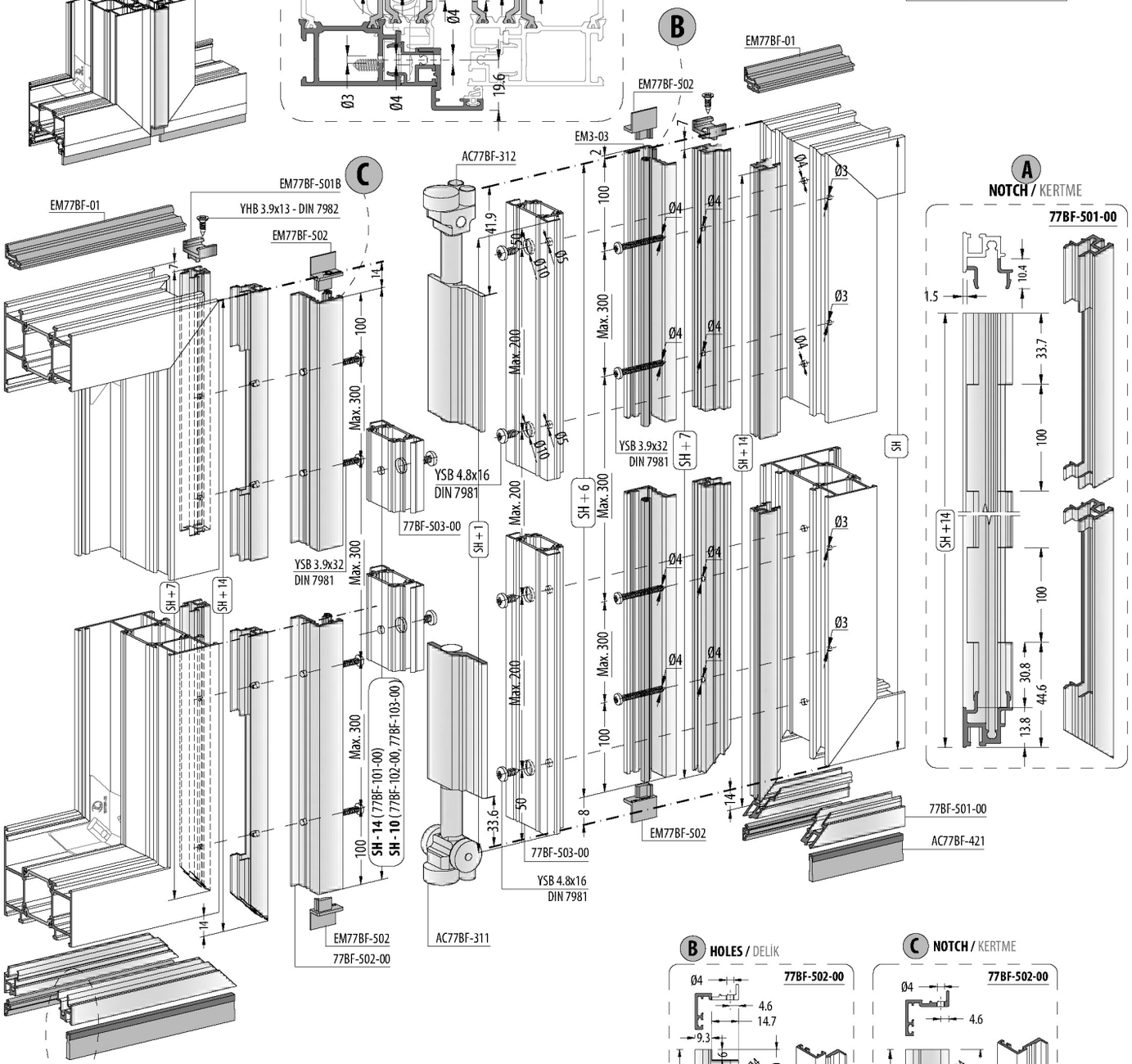

Attention
Dikkat !...

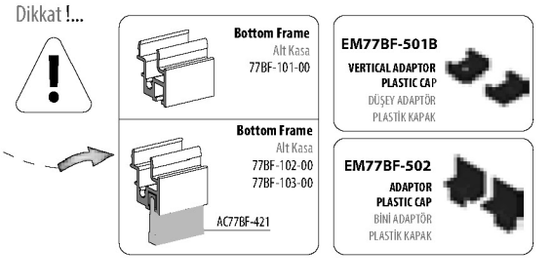

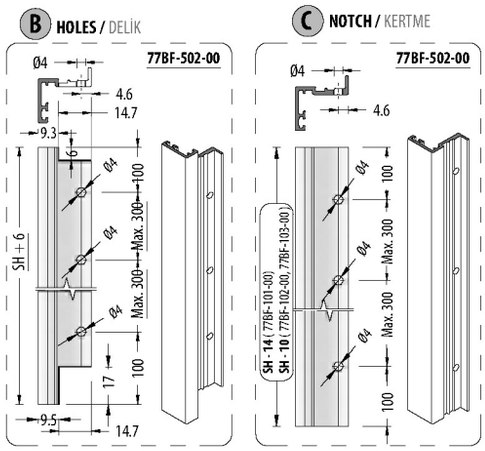

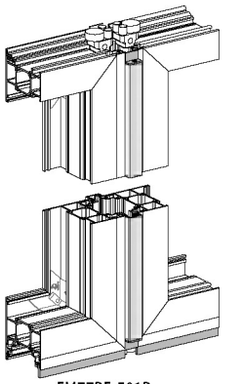

08-A **POINT DETAIL /** NOKTA DETAYI

DETAIL / DETAY

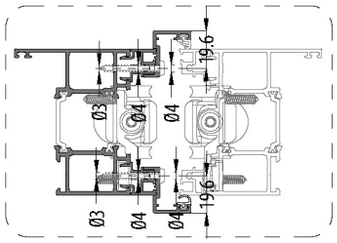

08-A

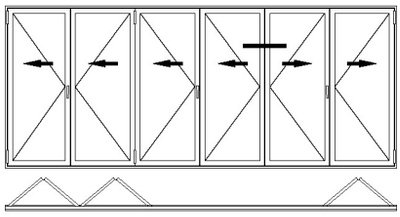

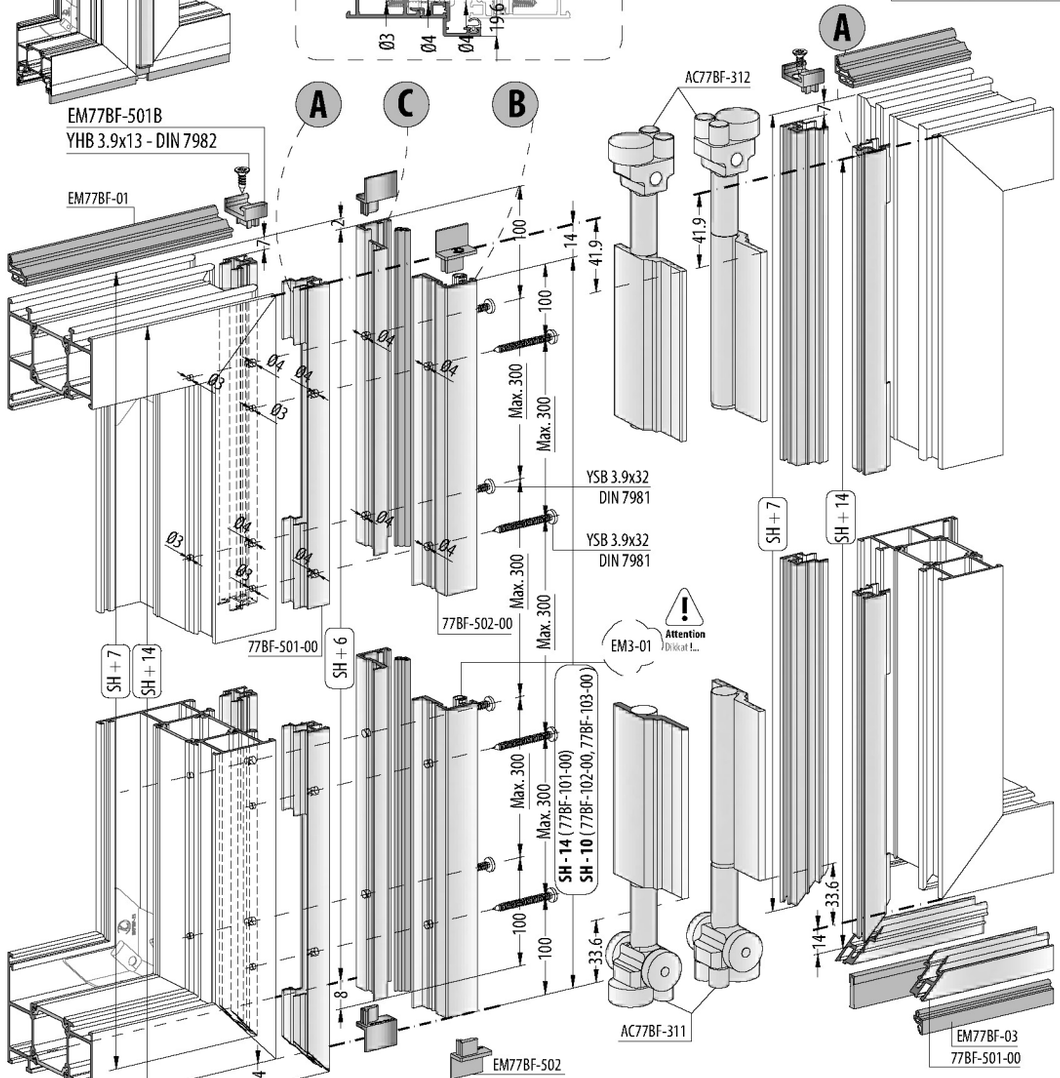

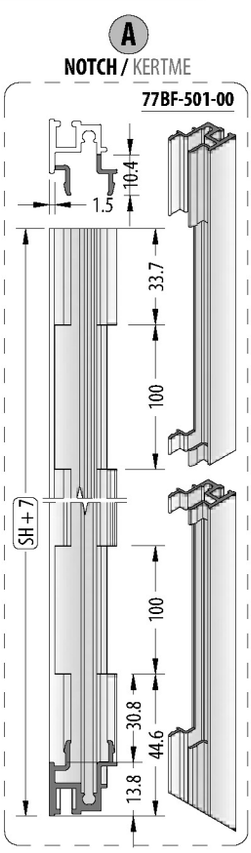

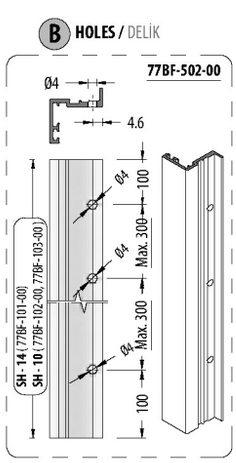

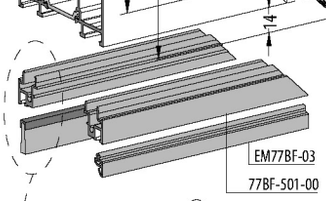

Attention
Dikkat !...

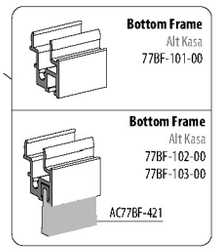

Bottom Frame / Alt Kasa **77BF-101-18**

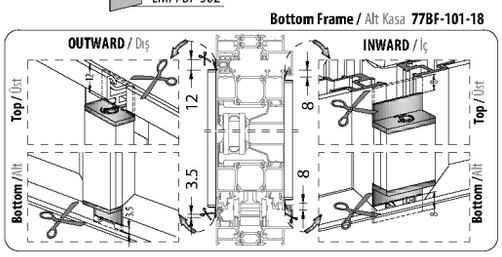

Bottom Frame / Alt Kasa **77BF-102-18 / 77BF-103-00**

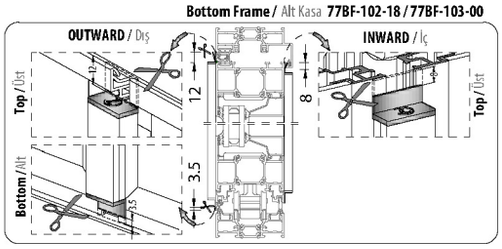

C NOTCH / KERTME

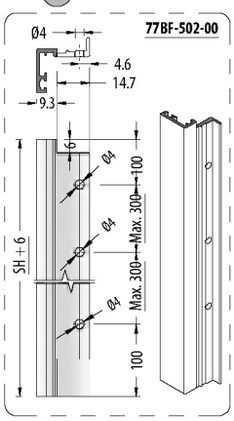

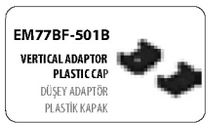



02-B / 02-A

POINT DETAIL / NOKTA DETAYI

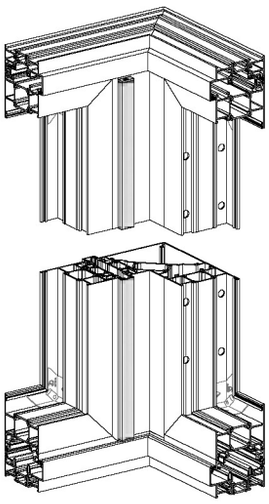

DETAIL / DETAY

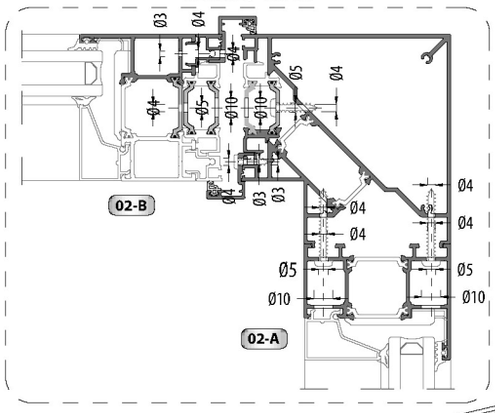

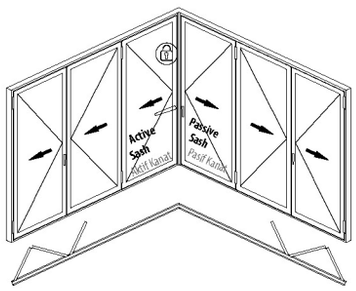

A NOTCH / KERTME

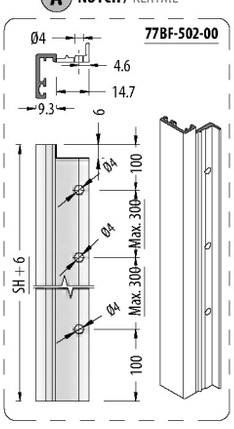

B HOLES / DELİK

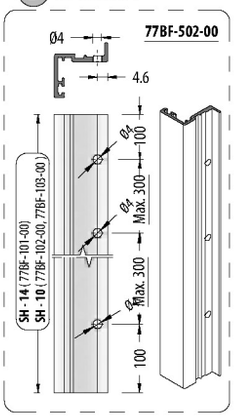

Attention
Dikkat !...

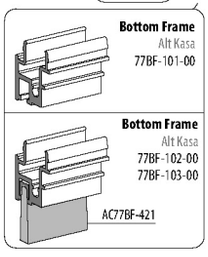

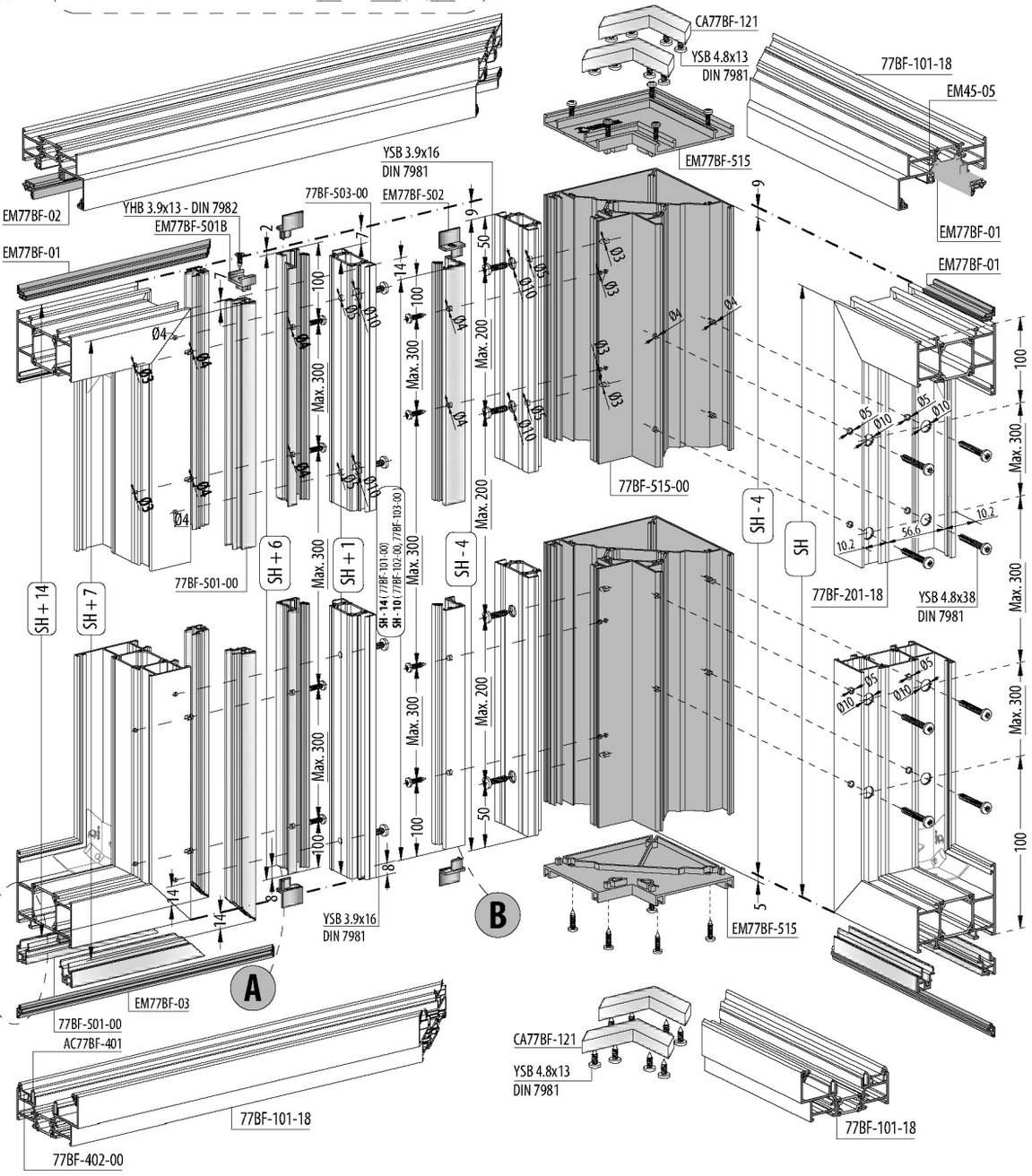

03-A / 02-A — **POINT DETAIL** / NOKTA DETAYI

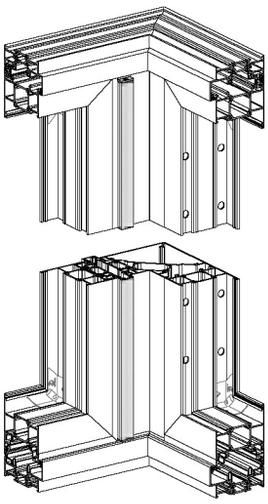

DETAIL / DETAY

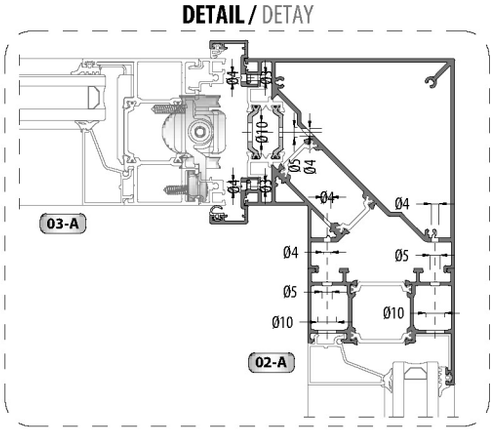

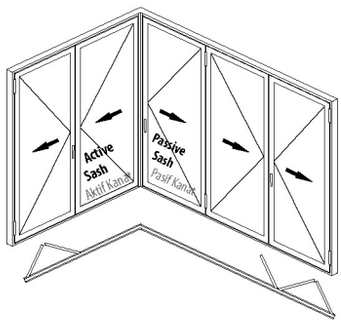

A
NOTCH / KERTME

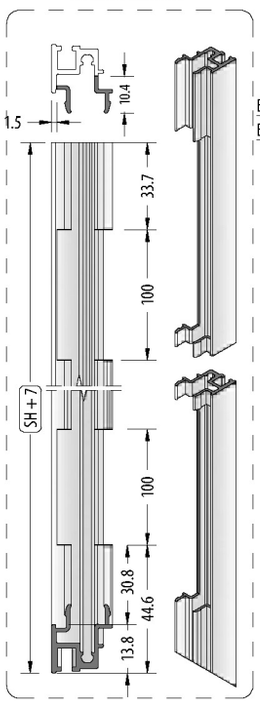

Attention
Dikkat !...

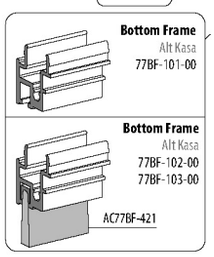

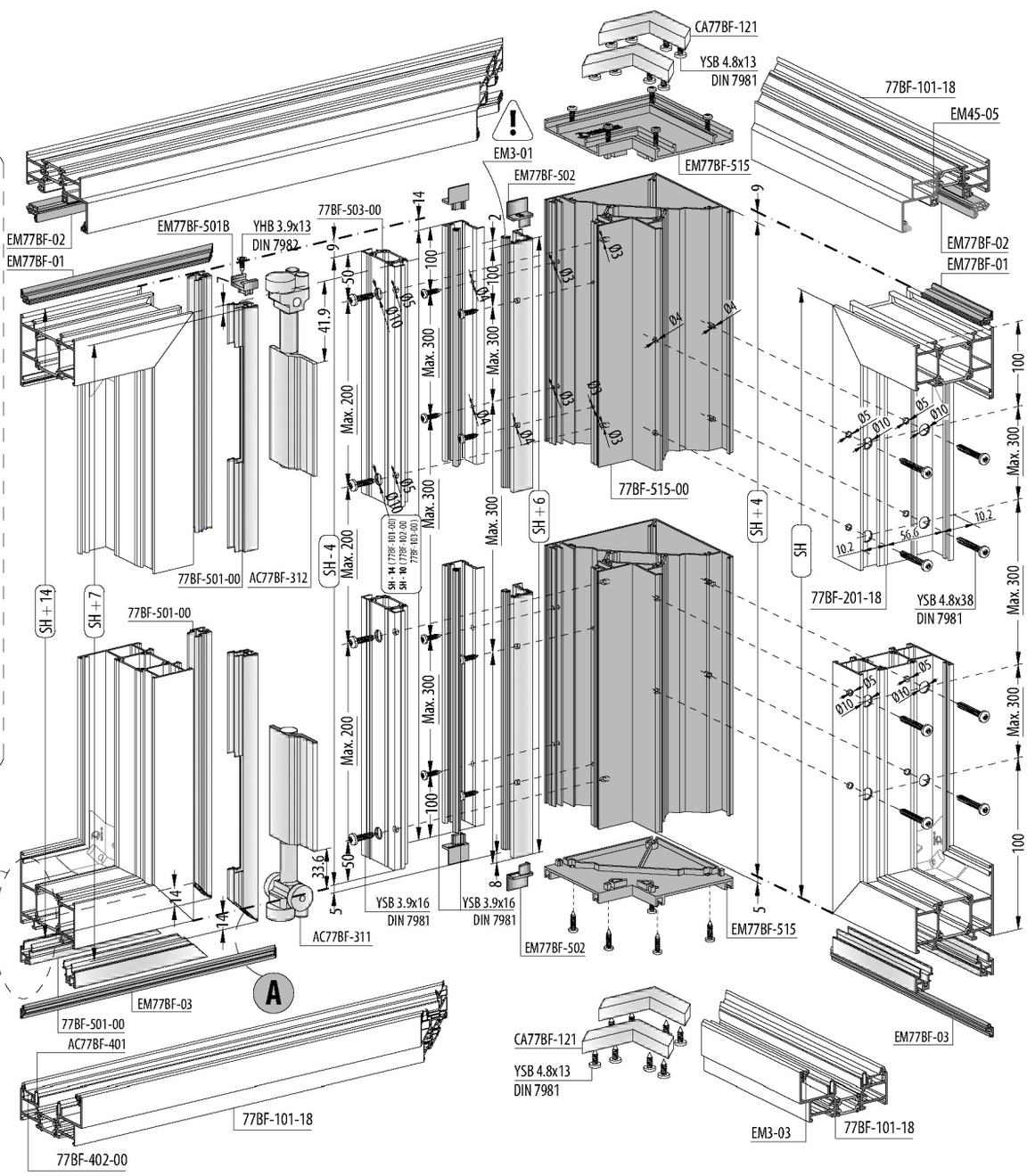

ACCESSORIES ASSEMBLY / AKSESUAR UYGULAMASI



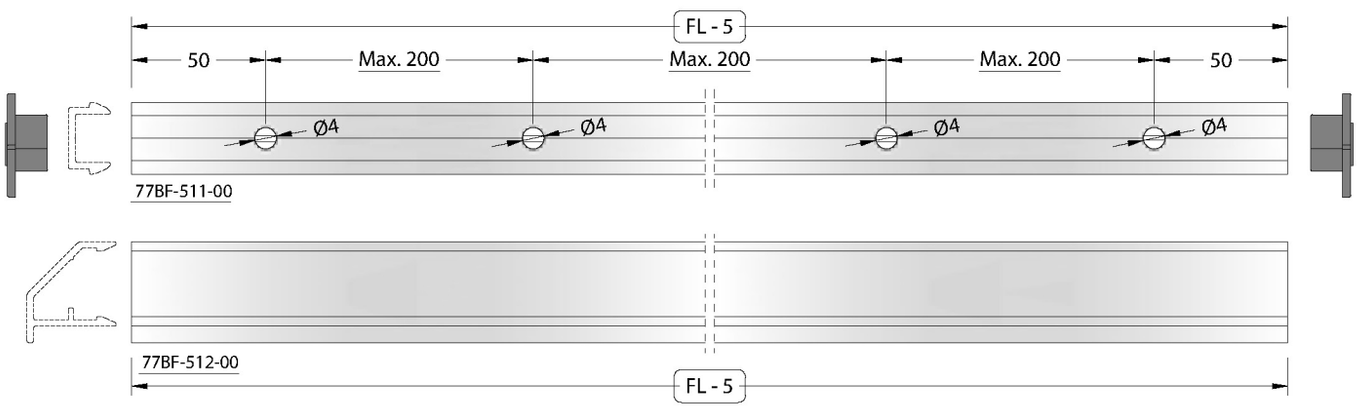

ACCESSORIES ASSEMBLY
AKSESUAR UYGULAMASI

ACCESSORIES ASSEMBLY / AKSESUAR UYGULAMASI

AC77BF-101
MINIMAL HANDLE (INWARD OPENING)
KOL (İÇE AÇILIR)



AC77BF-201
TWO-WAY MOVEMENT
KOL İLETİŞİM EKIPMANI



AC77BF-102
MINIMAL HANDLE (OUTWARD OPENING)
KOL (DIŞA AÇILIR)



AC77BF-201
TWO-WAY MOVEMENT
KOL İLETİŞİM EKIPMANI



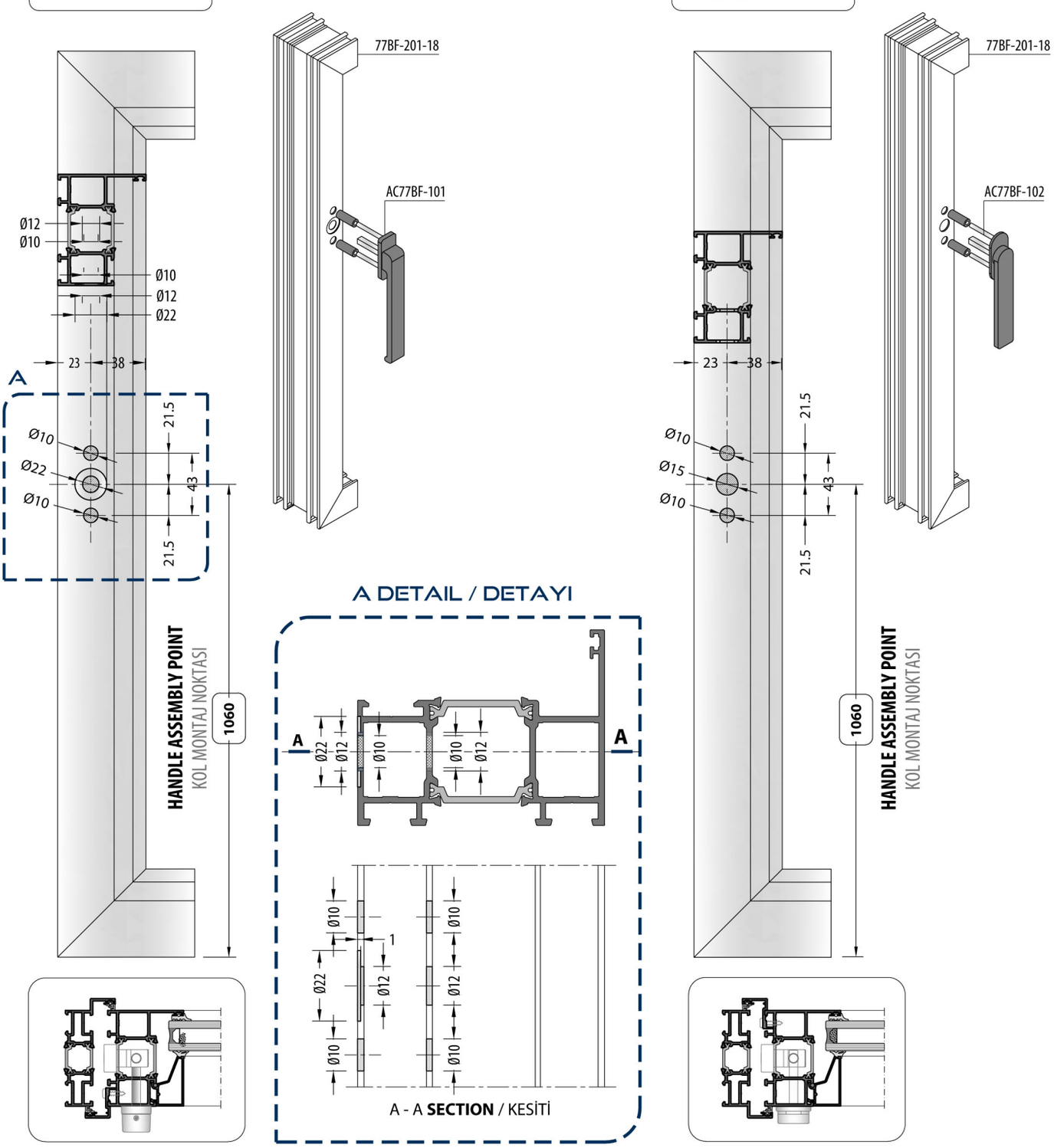

ACCESSORIES ASSEMBLY / AKSESUAR UYGULAMASI

AC77BF-103
DOUBLE HANDLE
MASTER KOL



AC77BF-202
MULTIPOINT CENTER LOCK TWO WAY
KİLİT



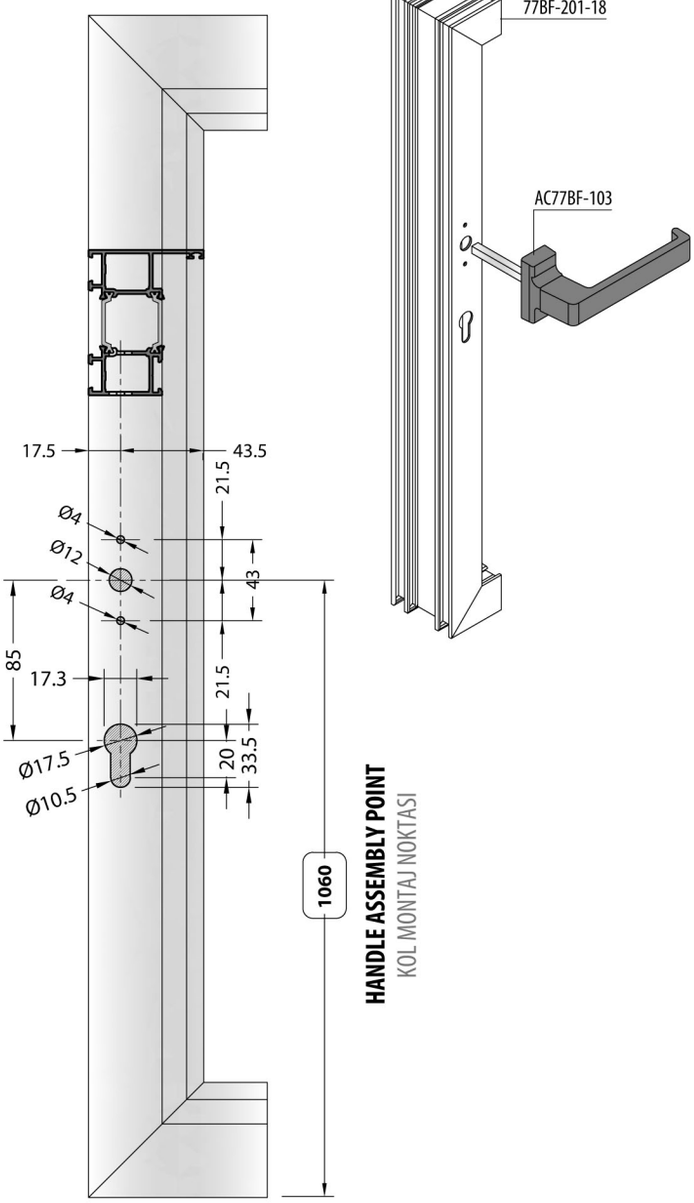

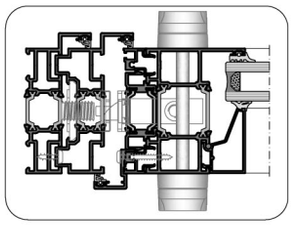

AC77BF-103
DOUBLE HANDLE
MASTER KOL



AC77BF-203
3 LOCKING POINT VERTICAL LOCK
3 NOKTADAN KİLİTLEMELİ İSPANYOLET



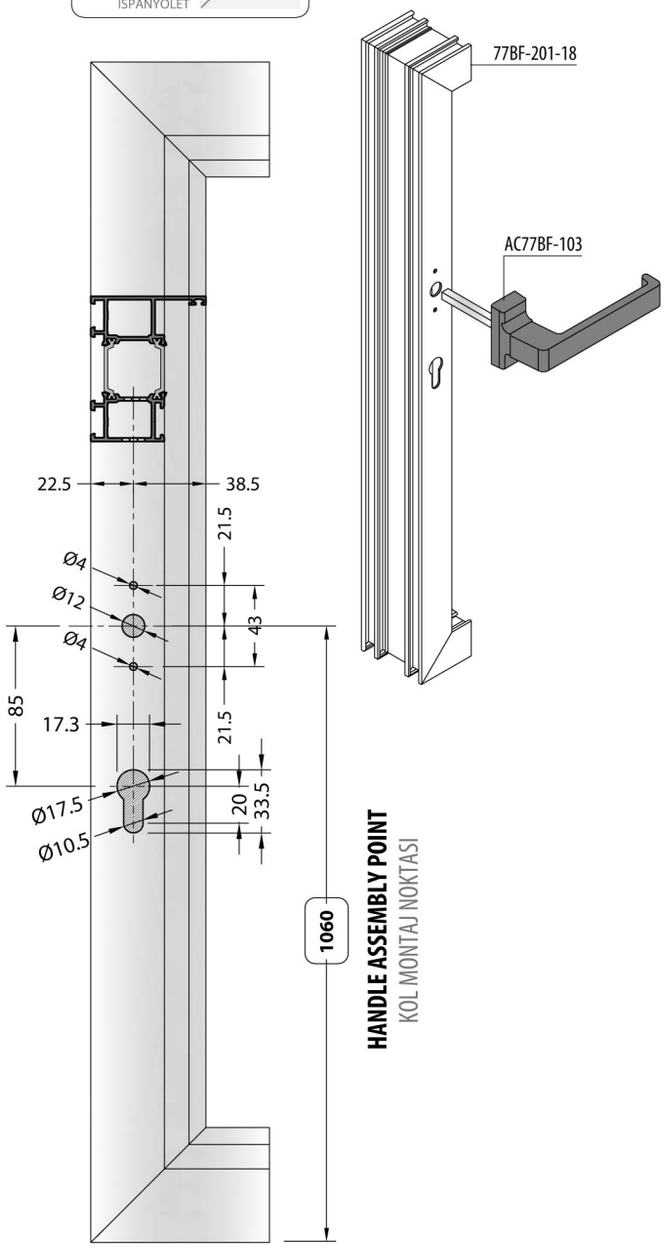

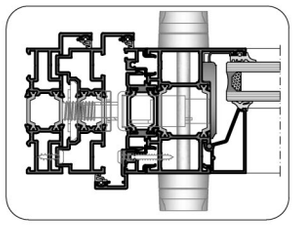

ACCESSORIES ASSEMBLY / AKSESUAR UYGULAMASI

HINGE WITH THREADED PLATE PER SASH / BİR KANATTAKİ KATLANIR MENTEŞE MİKTARI

3 HINGES (MENTEŞE)	Sash (Kanat) < 2200 mm	Sash Weight (Kanat Ağırlık) < 90 Kg
4 HINGES (MENTEŞE)	Sash (Kanat) < 2200 mm	Sash Weight (Kanat Ağırlık) > 90 Kg
4 HINGES (MENTEŞE)	2200 ≤ Sash (Kanat) < 3000 mm	
5 HINGES (MENTEŞE)	3000 ≤ Sash (Kanat) < 3500 mm	

AC77BF-301
HINGE WITH THREADED PLATE
KATLANIR MENTEŞESİ



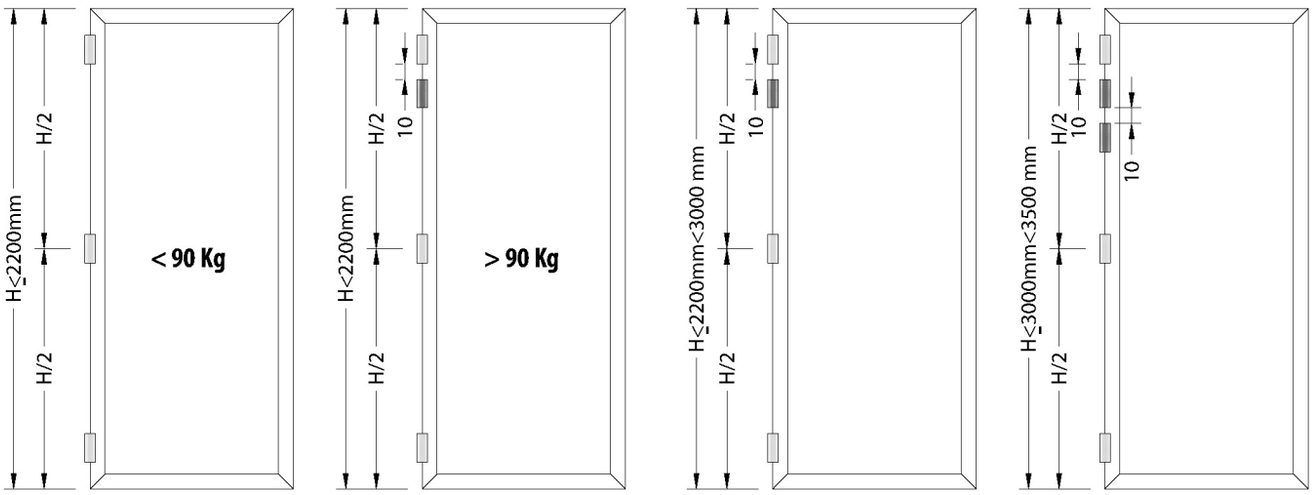

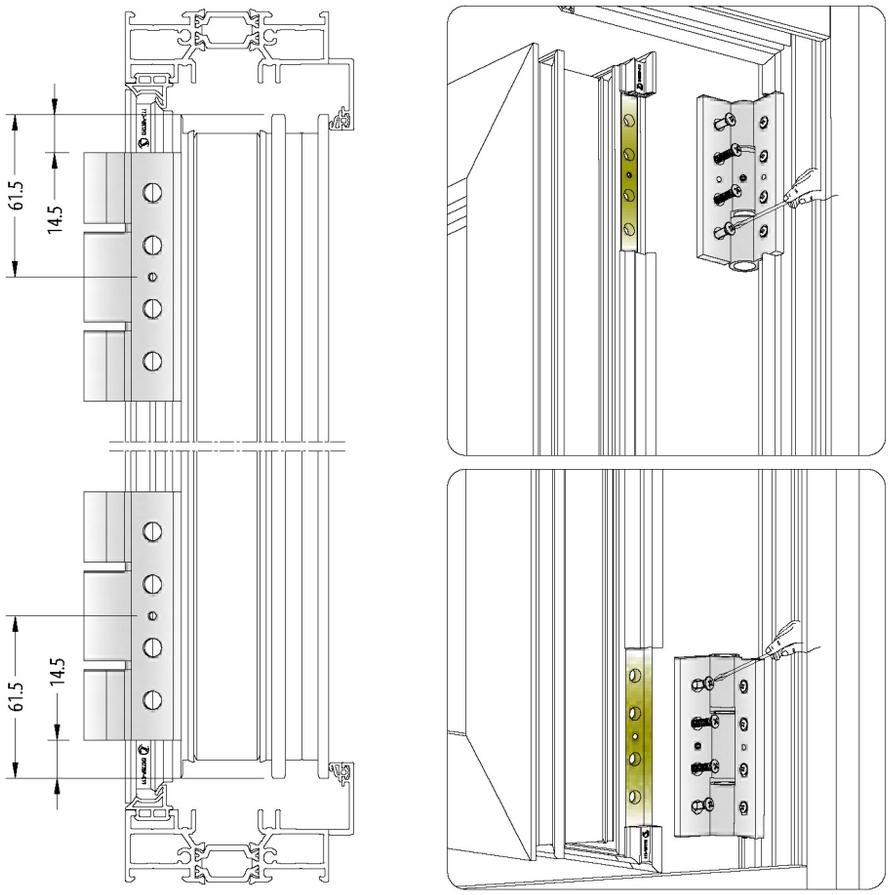

LORENZOLINE

AC77BF-101 MINIMAL HANDLE (INWARD OPENING) / KOL (İÇE AÇILIR)

AC77BF-201 TWO-WAY MOVEMENT / KOL İLETİŞİM EKIPMANI

AC77BF-211 LOCKING ROD KIT / KILITLEME TIJ TAKIMI

EM77BF-91 ROD GUIDE PLASTIC / GİJON KILAVUZ PLASTİĞİ

EM77BF-281 SASH GUIDE SET / KANAT KILAVUZ YUVASI

ACCESSORIES ASSEMBLY / AKSESUAR UYGULAMASI

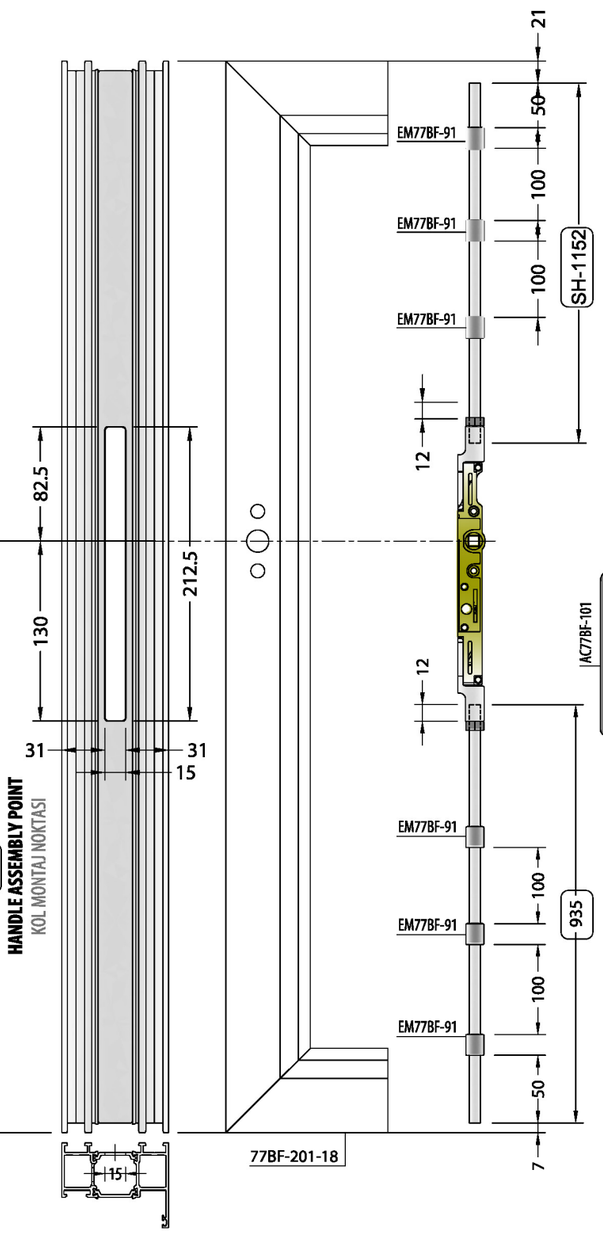

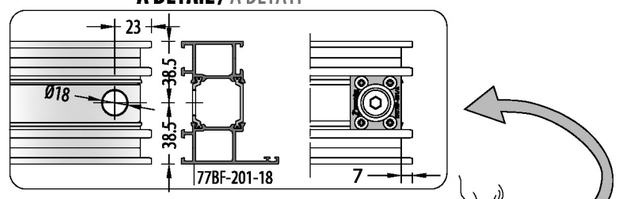

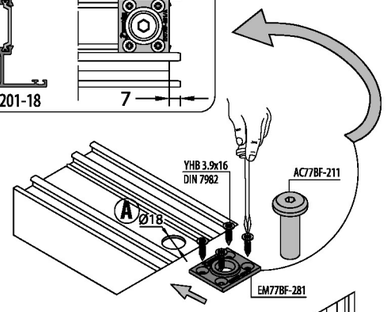

SLIDE INSIDE TO THE SASH PROFILE BEFORE CORNER ASSEMBLY.
KANAT KÖŞESİNİ BİRLEŞTİRMEDEN PROFİL İÇERİSİNE SÜR.

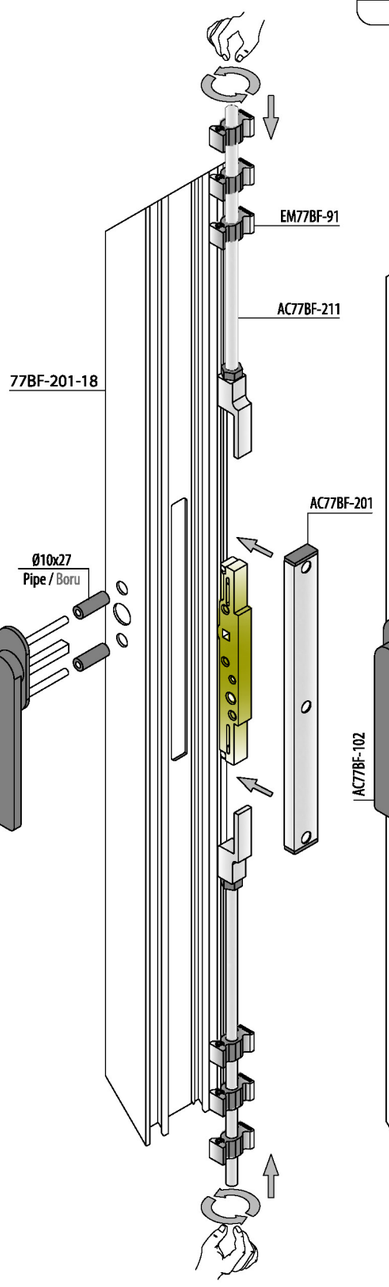

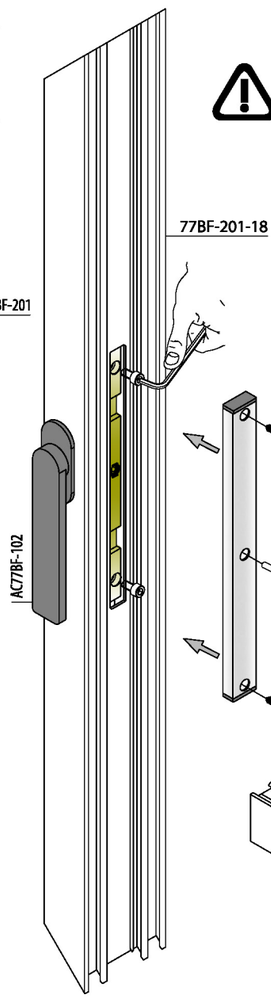

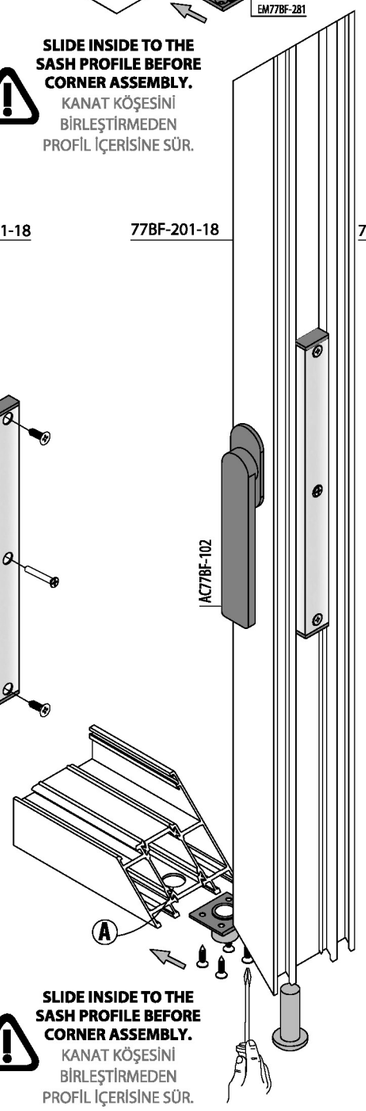

SLIDE INSIDE TO THE SASH PROFILE BEFORE CORNER ASSEMBLY.
KANAT KÖŞESİNİ BİRLEŞTİRMEDEN PROFİL İÇERİSİNE SÜR.

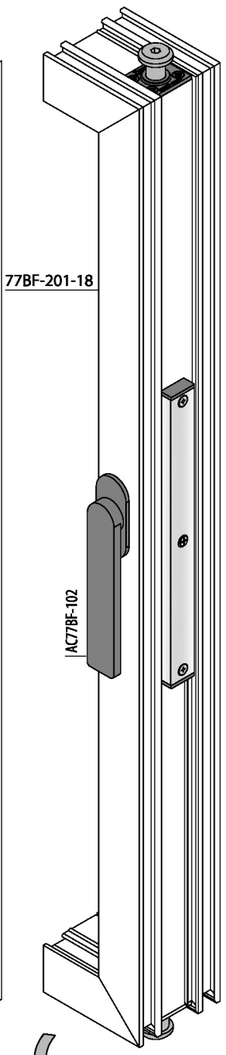

ACCESSORIES ASSEMBLY / AKSESUAR UYGULAMASI

77BF-503-00 NOCHING NEEDS TO BE DONE.
77BF-503-00 KULLANILIYORSA KERTME YAPILMASI GEREKMEKTEDİR.

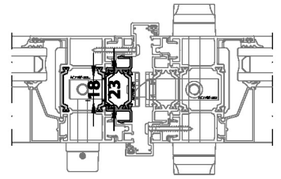

77BF-503-00 PROFILE WILL BE SHOULD NOTCH ON ONE SIDE.
PROFİLİNİN TEK TARAFI KERTİLMELİDİR.

DON'T USE CAP OF THE AC77BF-201
AC77BF-201'İN KAPAĞINI KULLANMA !...

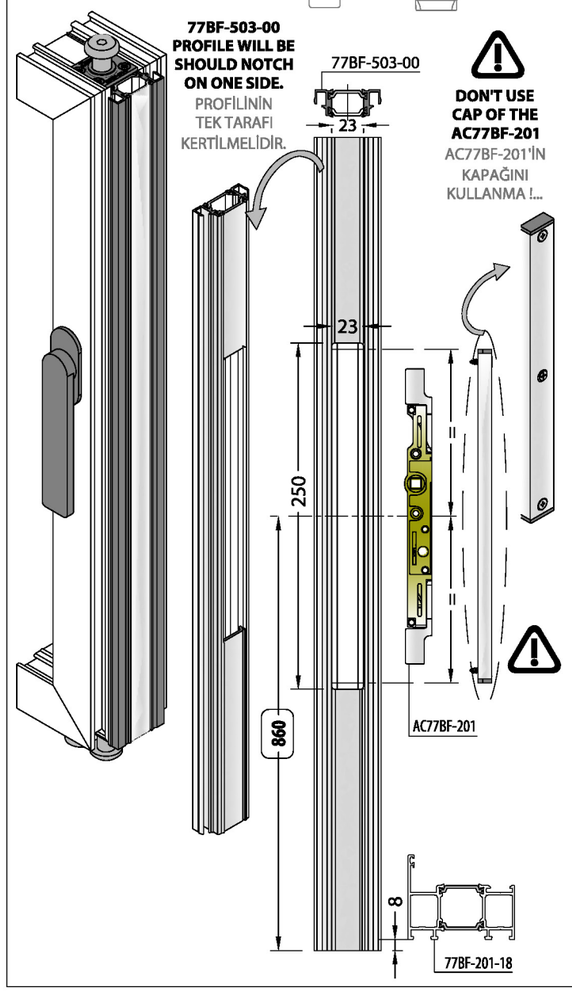

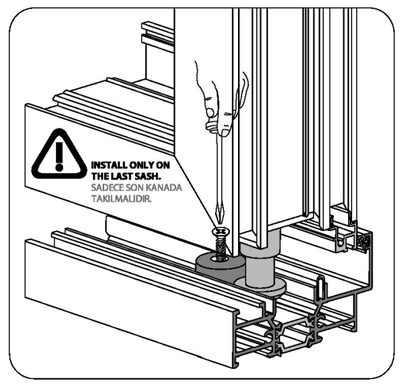

AC77BF-103 — DOUBLE HANDLE / MASTER KOL

AC77BF-202 — MULTIPOINT CENTER LOCK TWO WAY / KİLİT

AC77BF-211 — LOCKING ROD KIT / KILITLEME TIJ TAKIMI

EM77BF-91 — ROD GUIDE PLASTIC / GİJON KILAVUZ PLASTİĞİ

EM77BF-281 — SASH GUIDE SET / KANAT KILAVUZ YUVASI

AC77BF-221 — ADJUSTABLE COUNTERPLATE / KİLİT KARŞILIĞI

EM77BF-221 — LOCK AND STIKER ADAPTER / KİLİT VE KARŞILIK ADAPTÖRÜ

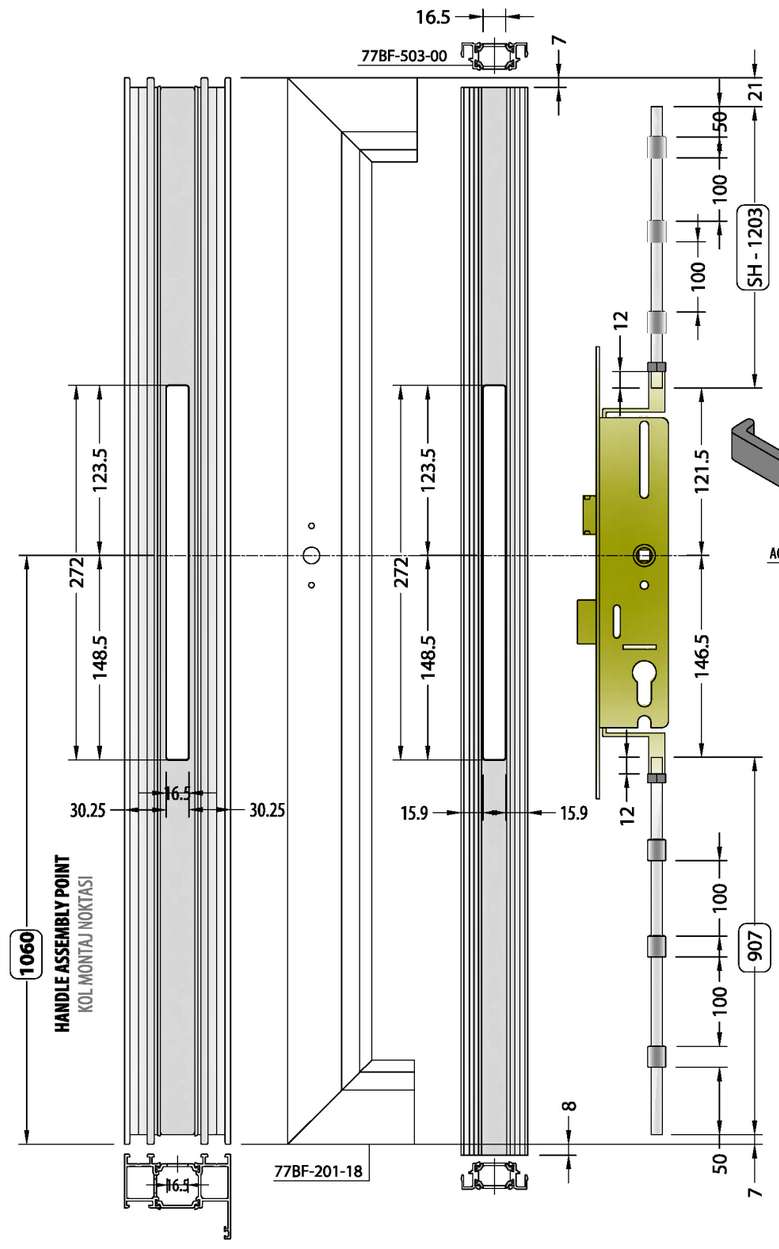

ACCESSORIES ASSEMBLY / AKSESUAR UYGULAMASI

A DETAIL / A DETAYI

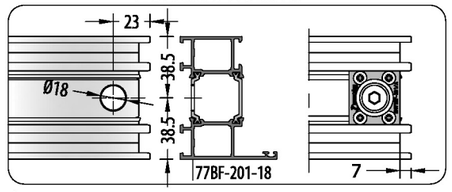

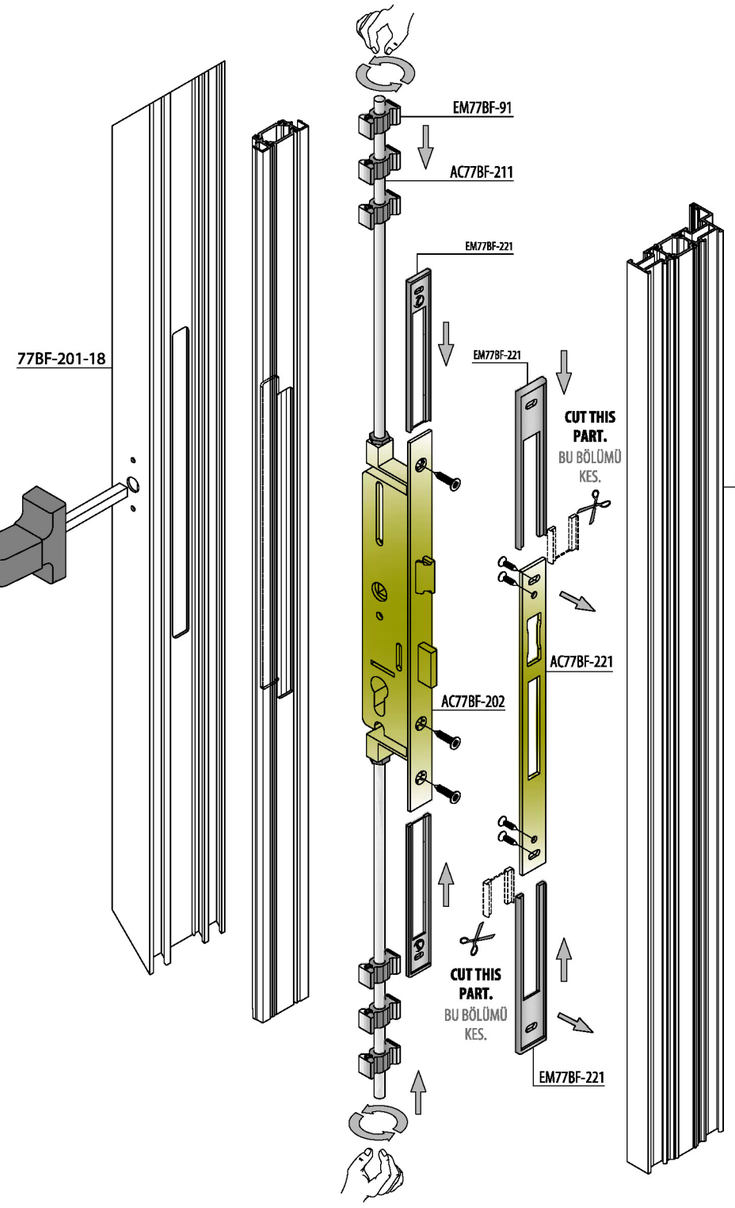

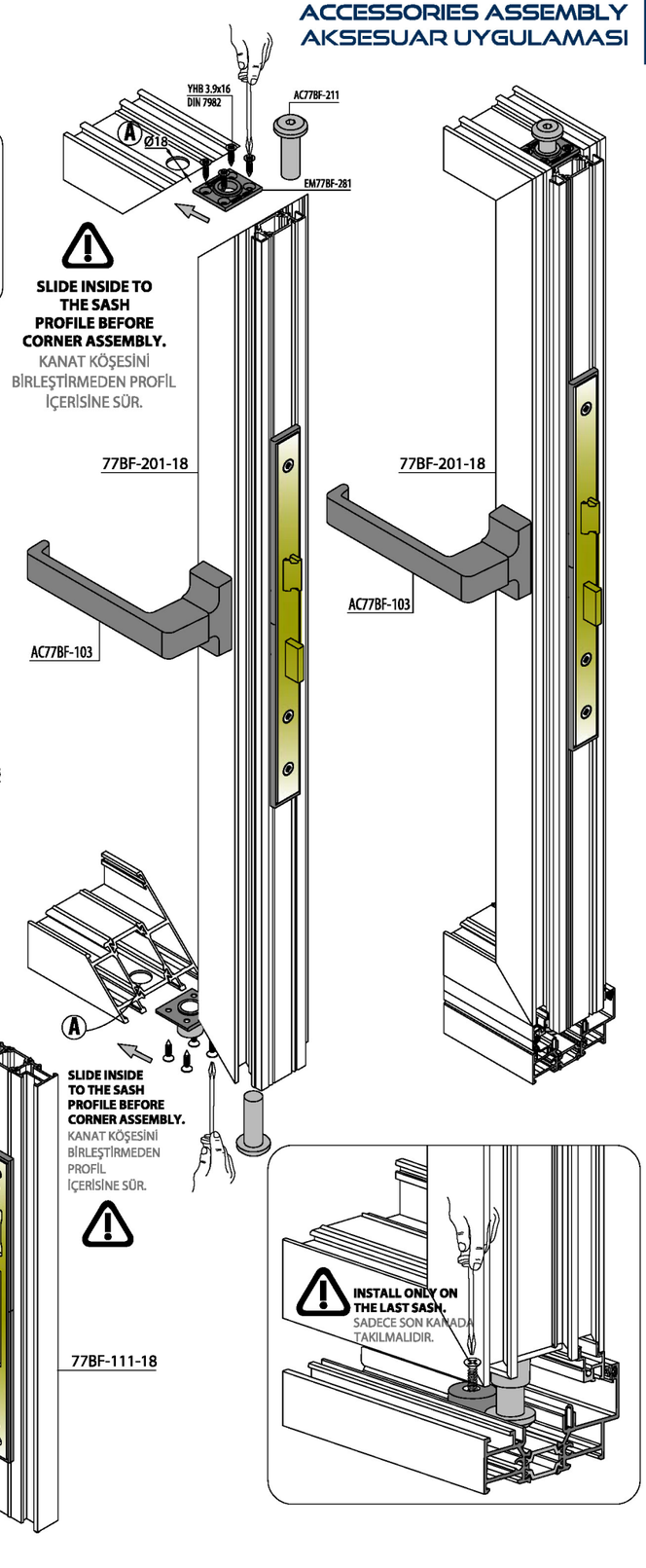

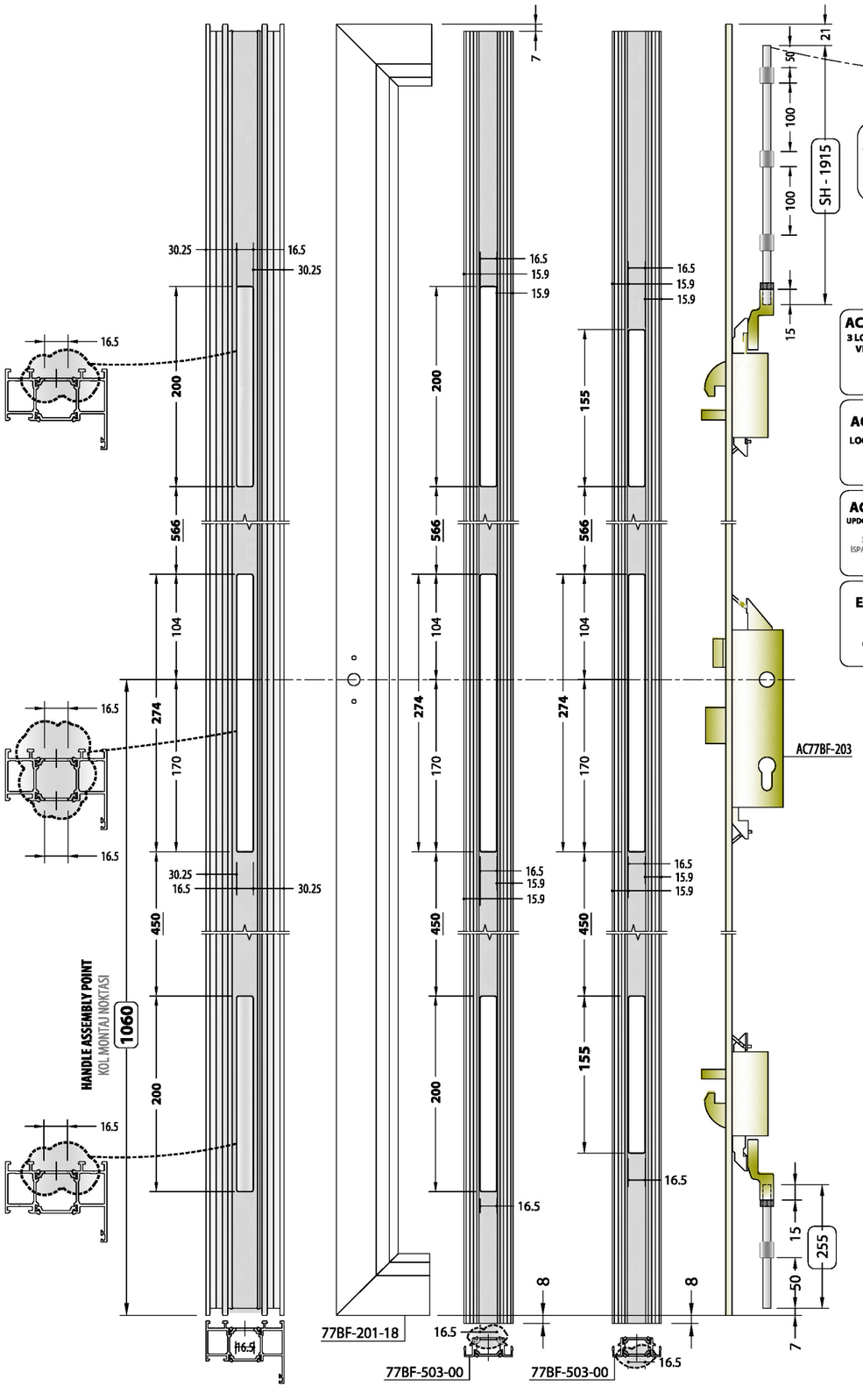

ACCESSORIES ASSEMBLY / AKSESUAR UYGULAMASI

IF / EĞER : SH < 2313 MM
TOP SIDE OF THE SPANYOLET SHOULD CUT
İSPANYOLETİN ÜSTÜ KESİLMELİ
2313 - SH

AC77BF-103 DOUBLE HANDLE — MASTER KOL

AC77BF-203 3 LOCKING POINT VERTICAL LOCK — 3 NOKTADAN KİLİTLEMELİ İSPANYOLET

EM77BF-281 SASH GUIDE SET — KANAT KILAVUZ YUVASI

AC77BF-211 LOCKING ROD KIT — KİLİTLEME TİJ TAKIMI

AC77BF-221 ADJUSTABLE COUNTERPLATE — KİLİT KARŞILIĞI

AC77BF-204 UPDOWN CONNECTION FOR TRIPLE LOCK — 3 NOKTADAN KİLİTLİ İSPANYOLET İÇİN GİJON BAĞLANTI APARATI

AC77BF-222 ADJUSTABLE COUNTERPLATE — KİLİT KARŞILIĞI

EM77BF-91 ROD GUIDE PLASTIC — GİJON KILAVUZ PLASTİĞİ

EM77BF-221 LOCK AND STIKER ADAPTER — KİLİT VE KARŞILIK ADAPTÖRÜ

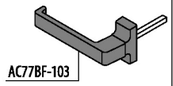

A DETAIL / A DETAYI

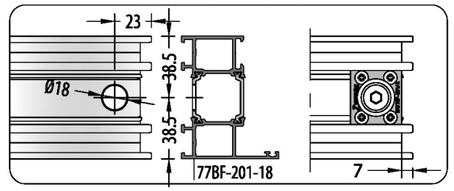

ACCESSORIES ASSEMBLY
AKSESUAR UYGULAMASI

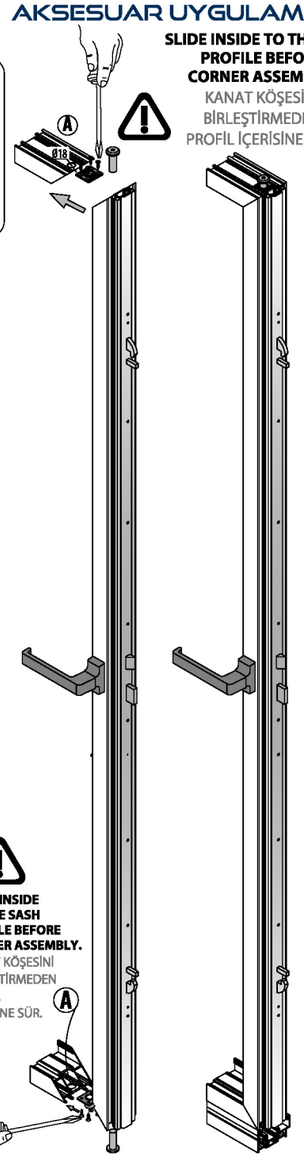

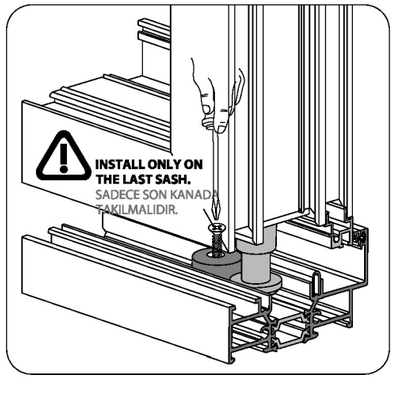

ACCESSORIES ASSEMBLY / AKSESUAR UYGULAMASI

AC77BF-431
SASH HOLDER
KANAT TUTUCU



ONLY USE ODD NUMBERED SASHES.
SADECE TEK SAYILI KANATLARDA KULLANIN.
INSTALL ONLY ON THE LAST TWO SASHES.
SADECE SON İKİ KANADA TAKILMALIDIR.

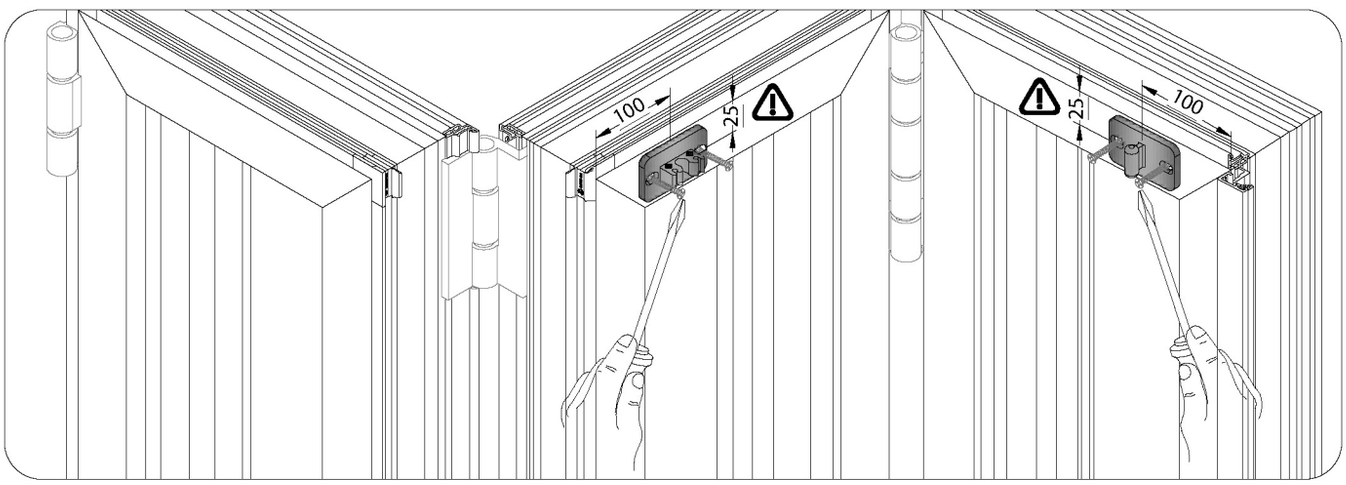

INWARD OPENING / İÇE AÇILIR

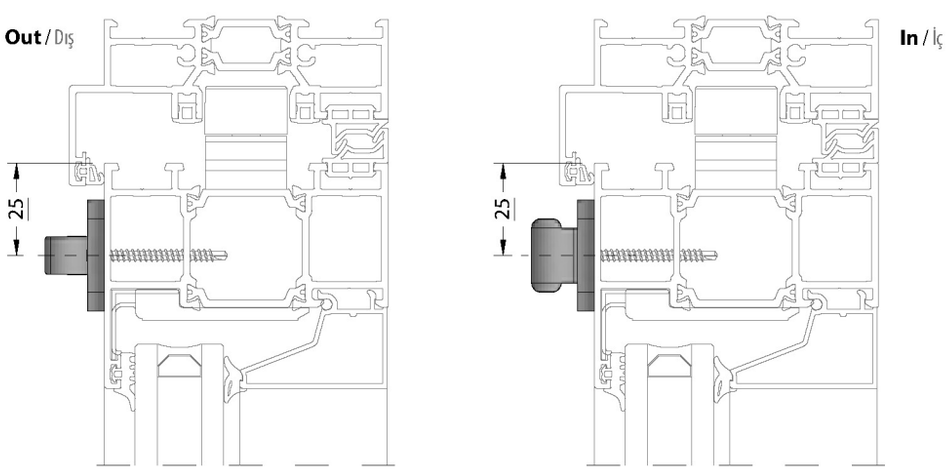

OUTWARD OPENING / DIŞA AÇILIR

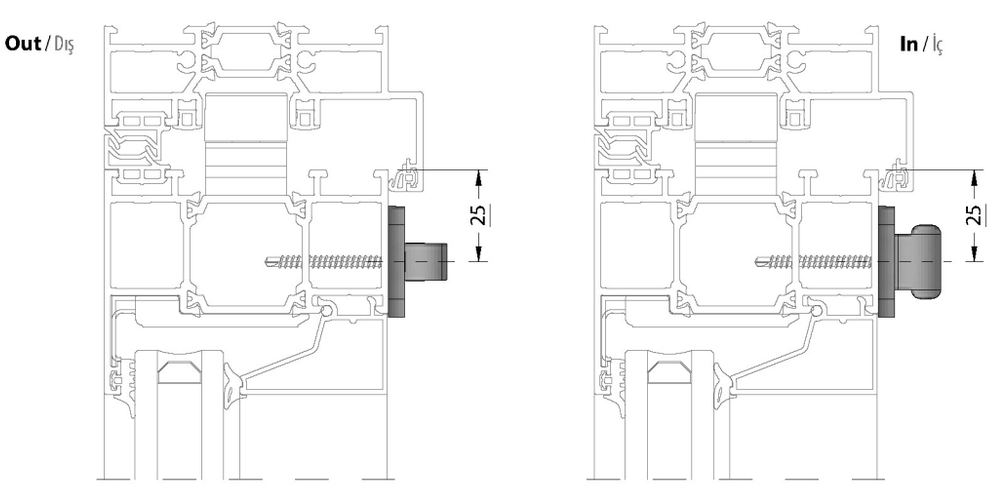

ACCESSORIES ASSEMBLY / AKSESUAR UYGULAMASI

AC77BF-111
PULL HANDLE
ÇEKME KOL



AC77BF-112
HINGE WITH THREADED PLATE
ÇEKME KOL



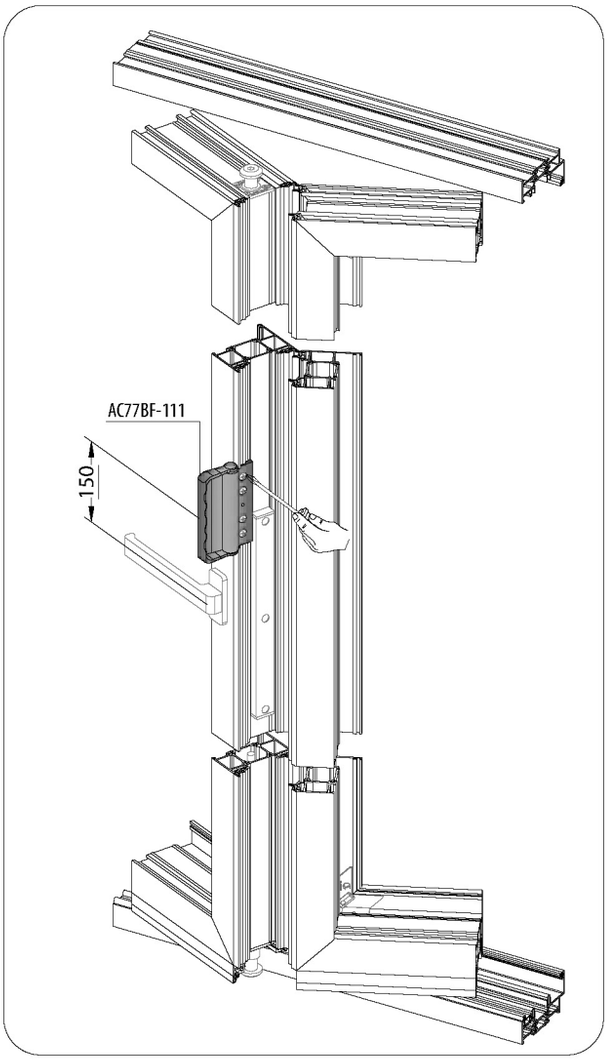

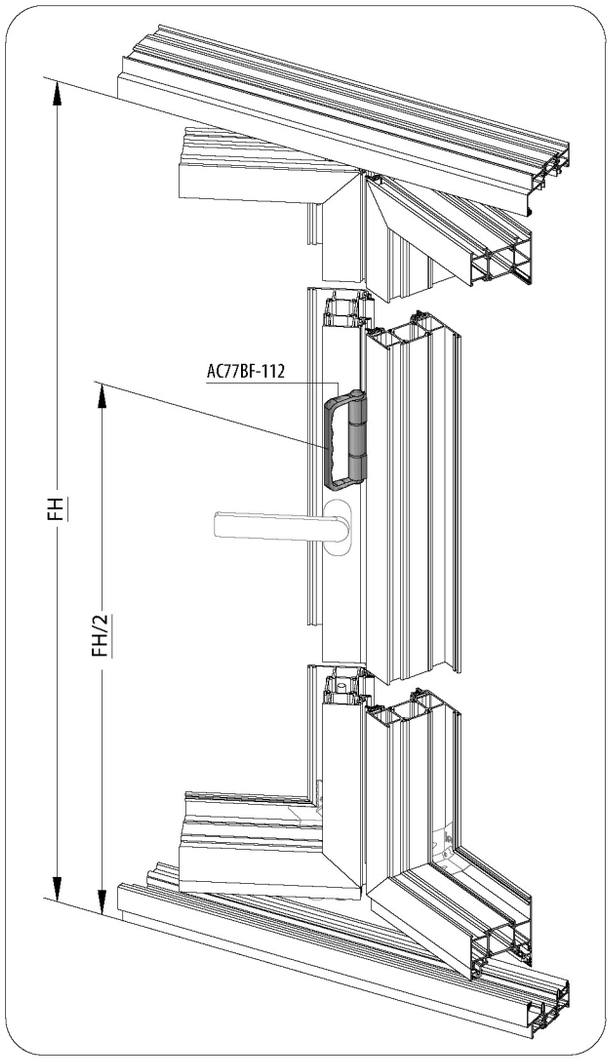

INWARD OPENING / İÇE AÇILIR

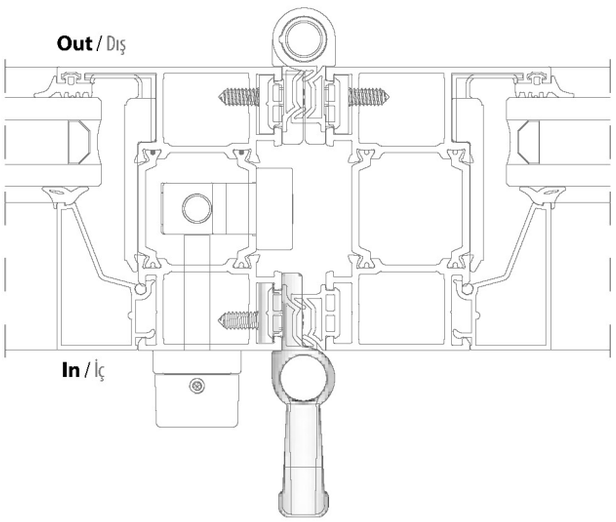

OUTWARD OPENING / DIŞA AÇILIR

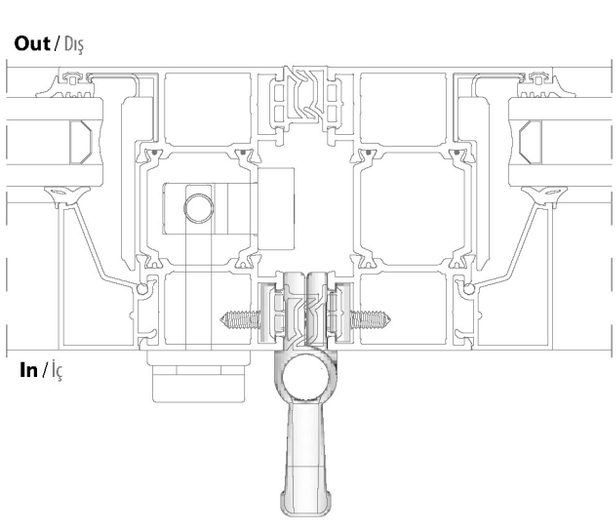

ACCESSORIES ASSEMBLY / AKSESUAR UYGULAMASI

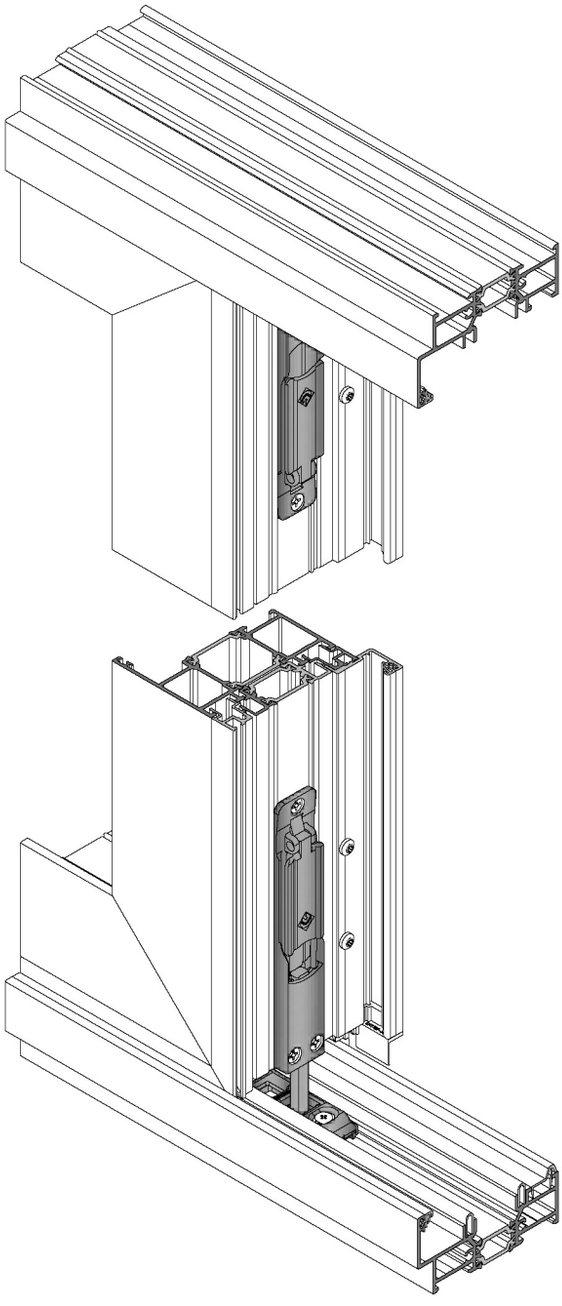

AC77BF-231
LEVER BOLT
FİŞEK SÜRGÜ



AC77BF-232
STRIKER
FİŞEK KARŞILIK

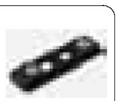

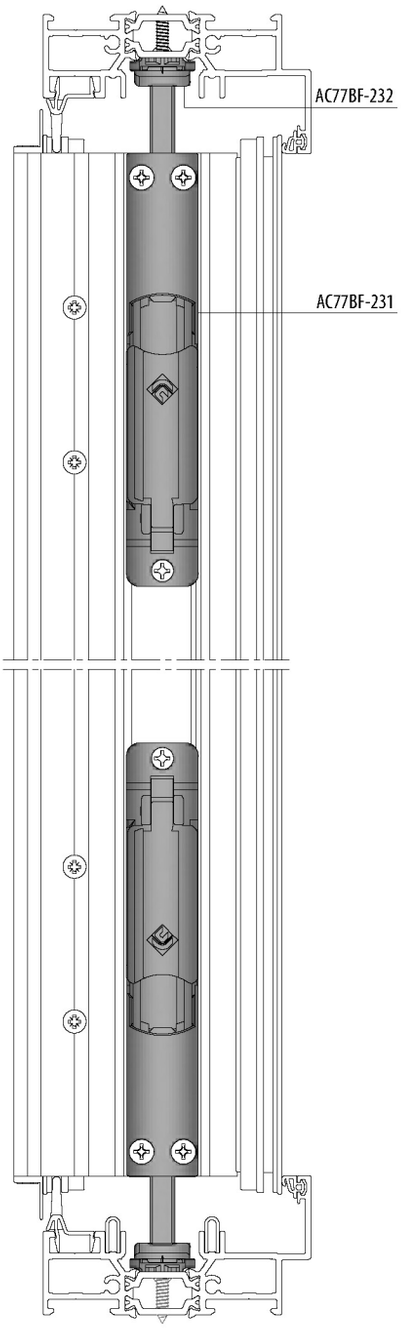

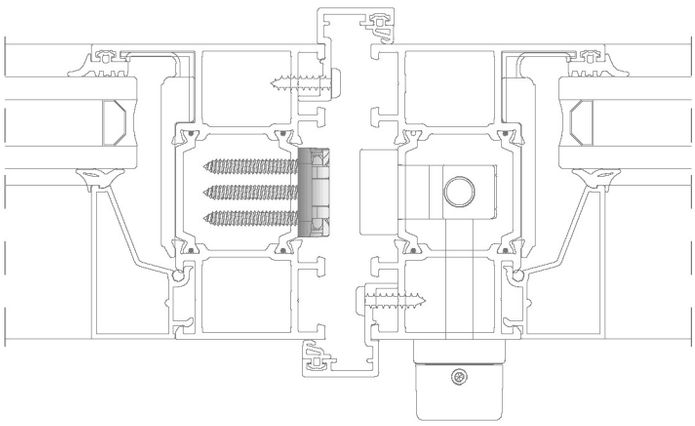

LORENZOLINE

www.lorenzoline.com.tr